1111 ENGINE UNIT(OM662LA)

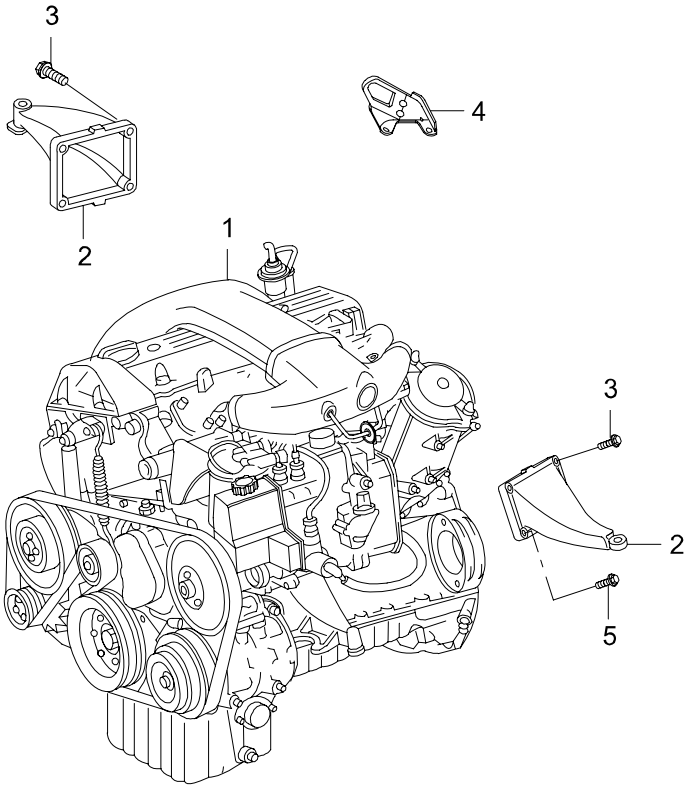

1111 ENGINE UNIT(OM662LA)

ITC	KEY NO. PART NO	PART NAME OPTION	L/R	T/M	DRV	MODEL 662LA									EFF. DATE FROM	EFF. DATE TO	REMARK
	[01]	*ENGINE ASSY*															
	6620108100	KOR2004,A/CON,W/EGR,SMF		M	L	1									02'1101	06'0228	D29P-211
	6620105000	A/CON,EGR,KOR2004		A	L	1									02'1101	06'0228	D29P-212
	6620105200	EURO III,A/CON,W/EGR,IMMO,EU ONLY		M	L	1									04'0224	06'0228	D29P-221
	6620105300	EURO III,A/CON,W/EGR,IMMO,EU ONLY		A	L	1									04'0224	06'0228	D29P-222
	6620105400	KOR2004,A/CON,W/EGR,GEN ONLY		M	R	1									03'1226	06'0228	
	6620107000	KOR2004,A/CON,W/EGR,GEN ONLY		A	R	1									03'1226	06'0228	
	6620107700	EURO III,A/CON,W/EGR,IMMO,EU ONLY		M	R	1									04'0224	06'0228	
	6620107800	EURO III,A/CON,W/EGR,IMMO,EU ONLY		A	R	1									04'0224	06'0228	
	[02]	*BRKT-ENGINE MTG*															
	6622233604		LH			1									02'1101	06'0228	
	6622233504		RH			1									02'1101	06'0228	
	[03]	*BOLT*															
	914005008008					6									02'1101	06'0228	M8X30
	[04]	*HANGER-ENGINE*															
	6612233241					1									02'1101	06'0228	
	[05]	*BOLT*															
	914005008020					2									02'1101	06'0228	M8X50

1120 SHORT BLOCK(DSL)

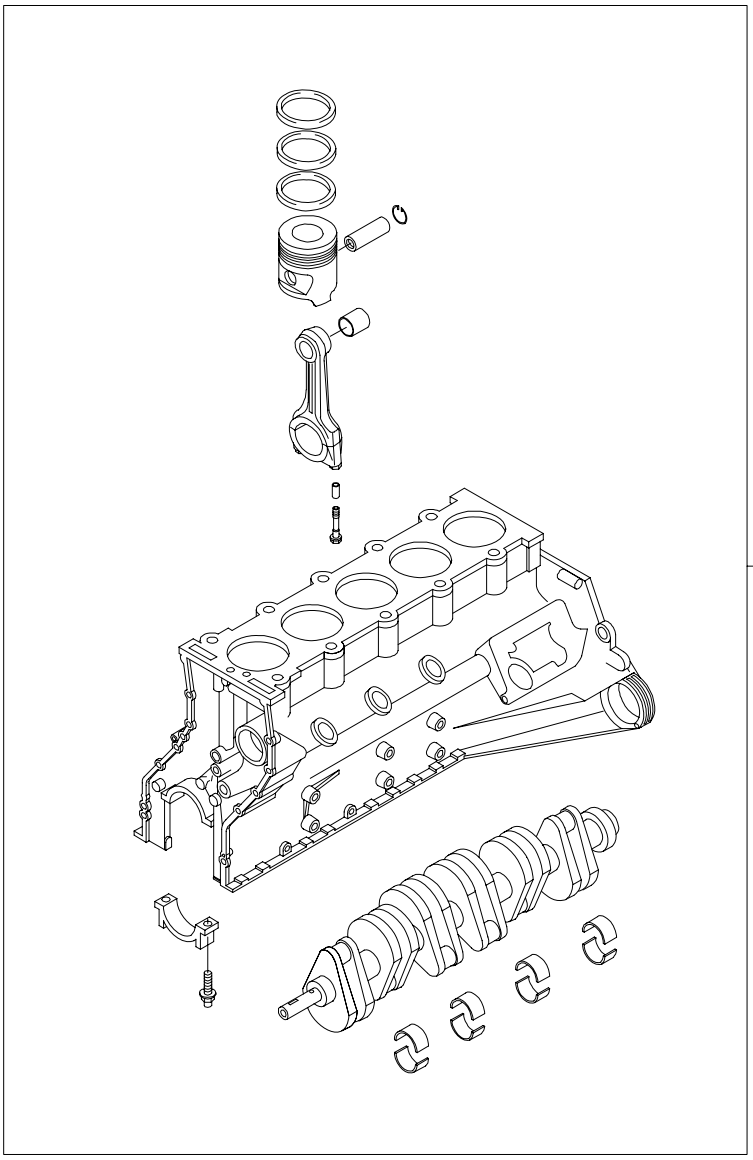

1120 - 01

1120 SHORT BLOCK(DSL)

ITC	KEY NO. PART NO	PART NAME OPTION	L/R	T/M	DRV	MODEL 662LA									EFF. DATE FROM	EFF. DATE TO	REMARK
	[01] A6620103301D	*SHORT BLOCK*				1									02'1101	06'0228	

1122 CYLINDER BLOCK(OM600)

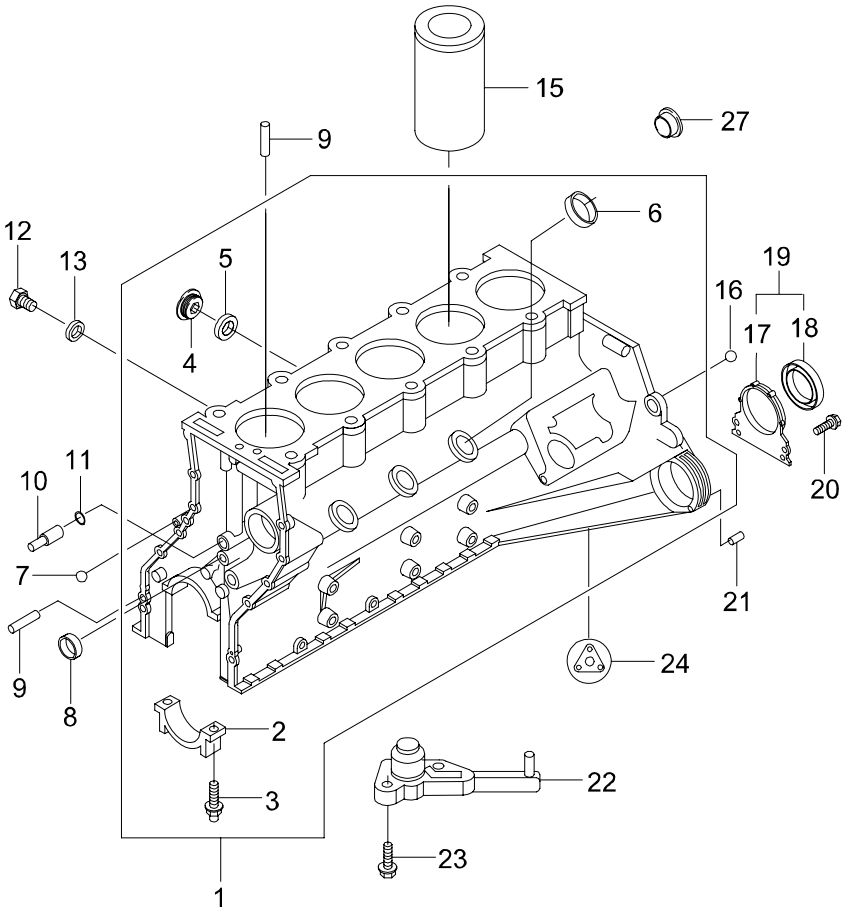

1122 CYLINDER BLOCK(OM600)

ITC	KEY NO. PART NO	PART NAME OPTION	L/R	T/M	DRV	MODEL 662LA	EFF. DATE FROM	EFF. DATE TO	REMARK
	[01]	*BLOCK ASSY-CYLINDER*							
	6620104305					1	02'1101	06'0228	
	[02]	*CAP-CRANKSHAFT BEARING*							
	1020110411					5	02'1101	06'0228	MAIN
	6610113013					1	02'1101	06'0228	THRUST
	[03]	*BOLT*							
	6610113171					10	02'1101	03'1215	
O	6650110171					10	03'1216	06'0228	
	6610113271					2	02'1101	03'1215	
O	6650110271					2	03'1216	06'0228	
	[04]	*PLUG-SCREWED*							
	1179970230					1	02'1101	06'0228	
	[05]	*RING-O*							
	0069977548					1	02'1101	06'0228	
	[06]	*PLUG-EXPANSION*							
	000443034002					6	02'1101	06'0228	
	[07]	*BALL*							
	6619913129					1	02'0901	06'0228	17MM
	[08]	*PLUG-EXPANSION*							
	000443017000					1	02'0901	06'0228	
	[09]	*PIN-SPRING*							
	6019920325					5	02'1101	06'0228	
	6019920625					1	02'1101	06'0228	
	[10]	*NOZZLE-OIL*							
	6021870036					1	02'1101	06'0228	
	[11]	*RING-O*							
	6069971545					1	02'1101	06'0228	
	[12]	*SCREW*							
	6629973072					1	02'1101	06'0228	
	[13]	*RING-SEAL*							
	007603018100					1	02'1101	06'0228	A18X22

1122 CYLINDER BLOCK(OM600)

ITC	KEY NO. PART NO	PART NAME OPTION	L/R	T/M	DRV	MODEL 662LA	EFF. DATE FROM	EFF. DATE TO	REMARK
	[15] 6010110310	*LINER-CYLINDER*				5	02'1101	06'0228	
	[16] 6619913229	*BALL*				1	02'1101	06'0228	15.00MM
	[17] 6610113008	*COVER-CRANKSHAFT SEALING RR*				1	02'1101	06'0228	
	[18] 6619973047	*RING-CRANKSHAFT RR SEAL*				1	02'1101	05'0613	
O	6619973147					1	05'0614	06'0228	
	[19] 6610103014	*COVER ASSY-CRANKSHAFT SEALING RR*				1	02'1101	04'1230	NOT AVAILABLE,USE [17][18]
	[20] 914005006005	*BOLT*				6	02'1101	06'0228	M6X20
	[21] 6019920125	*PIN-SPRING*				2	02'1101	06'0228	
	[22] 6011800843	*NOZZLE ASSY-OIL INJECTION*				5	02'1101	06'0228	
	[23] 914005006029	*BOLT*				5	02'1101	06'0228	M6X22
	[24] 6020105505	*GASKET KIT-CYLINDER BLOCK*				1	02'0901	06'0228	
	[27] 1610143133	*COVER-DUST*				1	02'1101	05'1231	

1130 CRANKSHAFT & FLYWHEEL

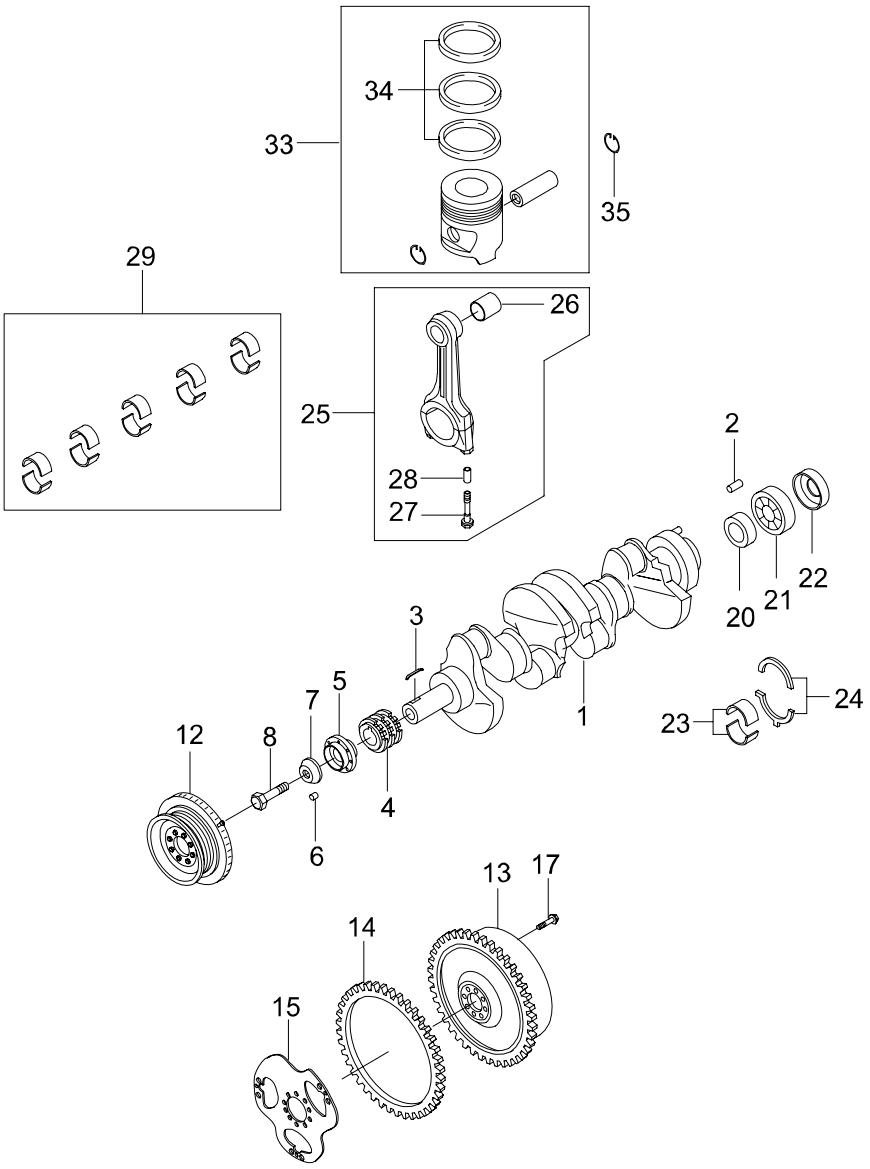

1130 CRANKSHAFT & FLYWHEEL

ITC	KEY NO. PART NO	PART NAME OPTION	L/R	T/M	DRV	MODEL 662LA	EFF. DATE FROM	EFF. DATE TO	REMARK
	[01]	*CRANKSHAFT*							
	6620313401					1	02'1101	05'0523	
Y	6620313201					1	05'0524	06'0228	
	[02]	*PIN-CYLINDRICAL*							
	6019970410					1	02'1101	06'0228	
	[03]	*KEY-CRANKSHAFT PULLEY*							
	6629913068					1	02'1101	06'0228	
	[04]	*SPROCKET ASSY-CRANKSHAFT*							
	6610523003					1	02'1101	06'0228	
	[05]	*HUB ASSY*							
	1040300008					1	02'1101	06'0228	
	[06]	*PIN-CYLINDRICAL*							
	000007008202					1	02'1101	06'0228	
	[07]	*DISC-CRANKSHAFT VIBRATION DAMPER*							
	6049900040					1	02'1101	06'0228	
	[08]	*BOLT*							
	6659900001					1	02'1101	06'0228	
	[12]	*DAMPER ASSY-VIBRATION*							
	6610303903					1	02'1101	06'0228	COMBINATION TYPE(PULLEY & DAMPER)
	[13]	*FLYWHEEL ASSY-MECH*							
	6030301505	SINGLE MASS		A		1	02'1101	06'0228	
	6620303011	SINGLE MASS		M		1	02'1101	03'1225	
N	6650301105	DUAL MASS		M		1	03'1226	04'1117	
O	6650302105	DUAL MASS		M		1	04'1118	06'0228	
	[14]	*GEAR-RING*							
	6610323005					1	02'1101	06'0228	
	[15]	*PLATE-DRIVE*							
	6620323006			A		1	02'1101	06'0228	
	[17]	*BOLT*							
	1119900312					8	02'1101	06'0228	

1130 CRANKSHAFT & FLYWHEEL

ITC	KEY NO. PART NO	PART NAME OPTION	L/R	T/M	DRV	MODEL 662LA	EFF. DATE FROM	EFF. DATE TO	REMARK
	[20]	*RING-CRANKSHAFT SPACER*							
	6610313051			M		1	02'1101	03'1225	
N	6610313151			M		1	03'1226	06'0228	
	[21]	*BEARING-GROOVED BALL*							
	6619803015			M		1	02'1101	06'0228	
	[22]	*RING-CRANKSHAFT COVER*							
	1020310133			M		1	02'1101	06'0228	
	[23]	*BEARING SET-CRANKSHAFT*							
	601030054052					6	02'1101	06'0228	BLUE
	601030054054					6	02'1101	06'0228	YELLOW
	601030054056					6	02'1101	06'0228	RED
	6010300640					6	02'1101	06'0228	REPAIR SIZE I ; 57.75MM
	6010300740					6	02'1101	06'0228	REPAIR SIZE II ; 57.50MM
	6010300840					6	02'1101	06'0228	REPAIR SIZE III ; 57.25MM
	6010300940					6	02'1101	06'0228	REPAIR SIZE IV ; 57.00MM
	[24]	*BEARING SET-THRUST*							
	6010300062					2	02'1101	06'0228	2.15MM
	6010300162					2	02'1101	06'0228	2.20MM
	6010300262					2	02'1101	06'0228	2.25MM
	6010300362					2	02'1101	06'0228	2.35MM
	6010300462					2	02'1101	06'0228	2.40MM
	[25]	*ROD ASSY-CONNECTING*							
	6610303220					5	02'1101	06'0228	
	[26]	*BUSHING*							
	6010381950					5	02'1101	06'0228	
	[27]	*BOLT*							
	1610383071					10	02'1101	06'0228	
	[28]	*SLEEVE*							
	6619913041					10	02'1101	06'0228	
	[29]	*BEARING KIT-CONNECTING ROD*							
	6020302560					1	02'1101	06'0228	STD ; 48.00MM
	6020302660					1	02'1101	06'0228	REPAIR SIZE I ; 47.75MM
	6020302760					1	02'1101	06'0228	REPAIR SIZE II ; 47.50MM
	6020302860					1	02'1101	06'0228	REPAIR SIZE III ; 47.25MM

1130 CRANKSHAFT & FLYWHEEL

ITC	KEY NO. / PART NO	PART NAME / OPTION	L/R	T/M	DRV	MODEL 662LA	EFF. DATE FROM	EFF. DATE TO	REMARK
	[29]	*BEARING KIT-CONNECTING ROD*							
	6020302960					1	02'1101	06'0228	REPAIR SIZE IV ; 47.00MM
	[33]	*PISTON ASSY*							
	6610303717					5	02'0901	06'0228	STD ; 89.00MM
	6610305417					5	03'1028	05'0329	REPAIR SIZE I ; 86.05MM
	[34]	*RING SET-PISTON*							
	0020302624					5	02'1101	03'1027	STD ; 89.00MM
Y	6620300124					5	03'1028	06'0228	STD ; 89.00MM
	0020308324					5	02'1101	03'1027	REPAIR SIZE I ; 89.70MM
O	6620300224					5	03'1028	05'0329	REPAIR SIZE I ; 89.05MM
	6620300324					5	03'1028	05'0329	REPAIR SIZE II ; 89.10MM
	[35]	*RING-SNAP*							
	6619943035					10	02'1101	06'0228	

1210 CYLINDER HEAD & GASKET KIT(OM600)

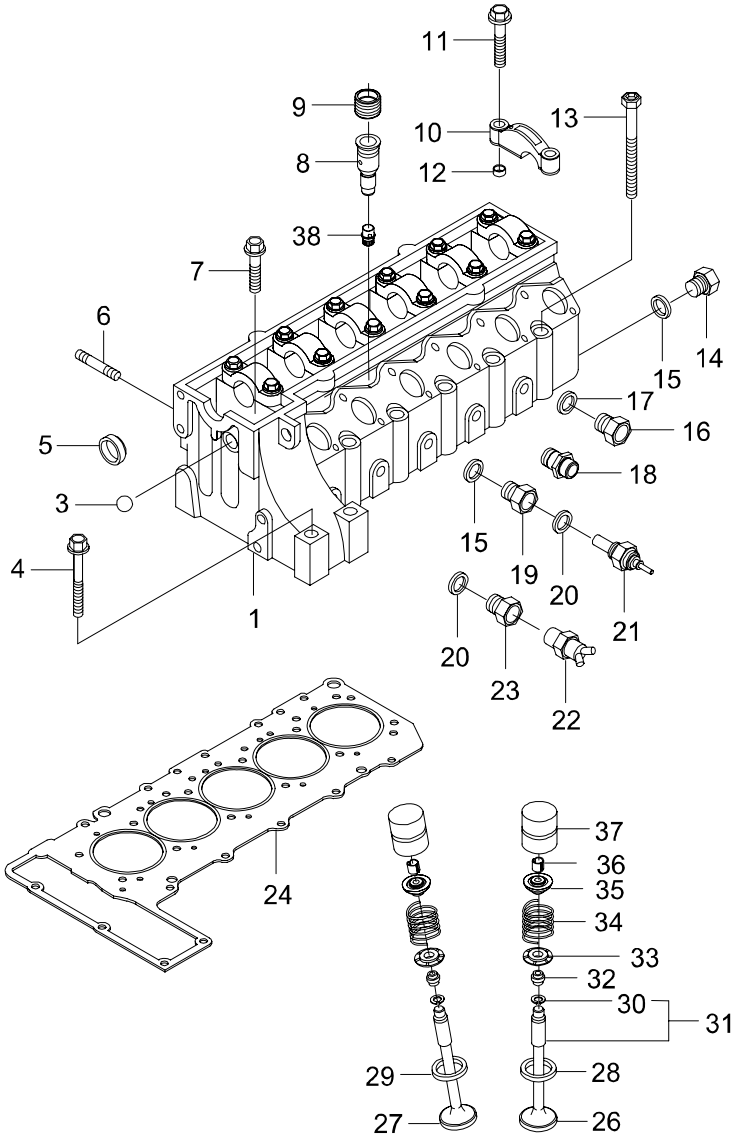

1210 - 01

1210 CYLINDER HEAD & GASKET KIT(OM600)

ITC	KEY NO. PART NO	PART NAME OPTION	L/R	T/M	DRV	MODEL 662LA	EFF. DATE FROM	EFF. DATE TO	REMARK
	[01]	*HEAD ASSY-CYLINDER*							
	6620103420					1	02'1101	06'0228	COMPLETE
	6620103520					1	02'1101	06'0228	WITH CAP
	[03]	*BALL*							
	6619913429					1	02'1101	06'0228	9.2MM
	[04]	*BOLT*							
	914010008018					2	02'1101	06'0228	M8X80
	[05]	*PLUG-EXPANSION*							
	4039970620					10	02'1101	06'0228	
	[06]	*BOLT*							
	6019900405					10	02'1101	06'0228	
	[07]	*BOLT*							
	914020008013					2	02'1101	06'0228	M8X50
	[08]	*CHAMBER ASSY-PRE*							
	6010103152					5	02'1101	06'0228	
	[09]	*RING-THREADED*							
	6010170203					5	02'1101	06'0228	
	[10]	*CAP-CAMSHAFT BEARING*							
	6010510003	STD				4	02'1101	06'0228	MACHINING TOGETHER WITH CYL.HEAD
	6010510103	FRT;STD				1	02'1101	06'0228	MACHINING TOGETHER WITH CYL.HEAD
	6010510203	FRT;STD				1	02'1101	06'0228	MACHINING TOGETHER WITH CYL.HEAD
	[11]	*BOLT*							
	304017008042					12	02'1101	06'0228	M8X45
	[12]	*PIN-SPRING*							
	6019920425					12	02'1101	06'0228	
	[13]	*BOLT*							
	6619903610					5	02'1101	06'0228	L=80MM

1210 CYLINDER HEAD & GASKET KIT(OM600)

ITC	KEY NO. PART NO	PART NAME OPTION	L/R	T/M	DRV	MODEL 662LA									EFF. DATE FROM	EFF. DATE TO	REMARK
	[13]	*BOLT*															
	6619903710					11									02'1101	06'0228	L=102MM
	6619903810					6									02'1101	06'0228	L=115MM
	[14]	*PLUG ASSY*															
	000908010002					1									02'1101	06'0228	
	[15]	*RING-SEAL*															
	007603010100					1									02'1101	06'0228	A10X13.5
	[16]	*PLUG ASSY*															
	000908022010					1									02'1101	06'0228	M22
	[17]	*RING-SEAL*															
	007603022100					4									02'1101	06'0228	A22X27
	[18]	*CONNECTOR*															
	6012030136					1									02'1101	06'0228	
	[19]	*CONNECTOR*															
	6019970172					1									02'1101	06'0228	
	[20]	*RING-SEAL*															
	007603014100					1									02'1101	06'0228	A14X18
	007603018100					1									02'1101	06'0228	A18X22
	[21]	*SENSOR ASSY-WATER TEMP*															
	1615423117	KOR2004				1									02'1101	06'0228	1 NTC
	6615423217	KOR2004				1									02'1001	06'0228	
	[22]	*VALVE-THERMO*															
	6621403060					1									02'1101	06'0228	
	[23]	*PLUG ASSY*															
	6019970572					1									02'1101	06'0228	
	[24]	*GASKET-CYLINDER HEAD*															
	6620163220					1									02'1101	06'0228	STD
	[26]	*VALVE-INTAKE*															
	6610533001					5									02'1101	06'0228	STD ; 103.90MM
	6010531801					5									02'1101	06'0228	R/SIZE ; 103.00MM

1210 CYLINDER HEAD & GASKET KIT(OM600)

ITC	KEY NO. PART NO	PART NAME OPTION	L/R	T/M	DRV	MODEL 662LA	EFF. DATE FROM	EFF. DATE TO	REMARK
	[27]	*VALVE-EXHAUST*							
	6010503027					5	02'1101	02'1102	STD ; 103.90MM
Y	6610503027					5	02'1103	06'0228	STD ; 103.90MM
	6010502627					5	02'1101	06'0228	R/SIZE ; 103.00MM
	[28]	*RING-INTAKE VALVE SEAT*							
	6010530531					5	02'1101	06'0228	STD 40.1MM
	6010530231					5	02'1101	06'0228	R/SIZE 40.6MM
	[29]	*RING-EXHAUST VALVE SEAT*							
	6010530832					5	02'1101	06'0228	STD 37.1MM
	6010530232					5	02'1101	06'0228	R/SIZE 37.6MM
	[30]	*RING-SNAP*							
	009045014000					10	02'1101	06'0228	
	[31]	*GUIDE ASSY-VALVE*							
	6010500224					5	02'1101	06'0228	INTAKE,D=14
	6010500724					5	02'1101	06'0228	INTAKE,D=14.20
	6010500824					5	02'1101	06'0228	INTAKE,D=14.40
	6010500524					5	02'1101	06'0228	EXHAUST,D=14
	6010501024					5	02'1101	06'0228	EXHAUST,D=14.20
	6010501124					5	02'1101	06'0228	EXHAUST,D=14.40
	[32]	*SEAL-VALVE STEM*							
	6610533058					5	02'1101	06'0228	EXHAUST
	6610533158					5	02'1101	06'0228	INTAKE
	[33]	*RETAINER-VALVE SPRING UNDER*							
	1030530825					10	02'1101	06'0228	
	[34]	*SPRING-VALVE*							
	6010530320					10	02'1101	06'0228	
	[35]	*RETAINER-VALVE SPRING*							
	6010530325					10	02'1101	06'0228	
	[36]	*COTTER-VALVE*							
	1020530026					20	02'1101	06'0228	
	[37]	*TAPPET ASSY-HYDRAULIC*							
	6010500725					10	02'1101	06'0228	

1210 CYLINDER HEAD & GASKET KIT(OM600)

ITC	KEY NO. PART NO	PART NAME OPTION	L/R	T/M	DRV	MODEL 662LA									EFF. DATE FROM	EFF. DATE TO	REMARK
	[38] 6010170150	*BUSH-NOZZLE HOLDER*				5									02'1101	06'0228	

1220 CYLINDER HEAD COVER & CAMSHAFT(OM600)

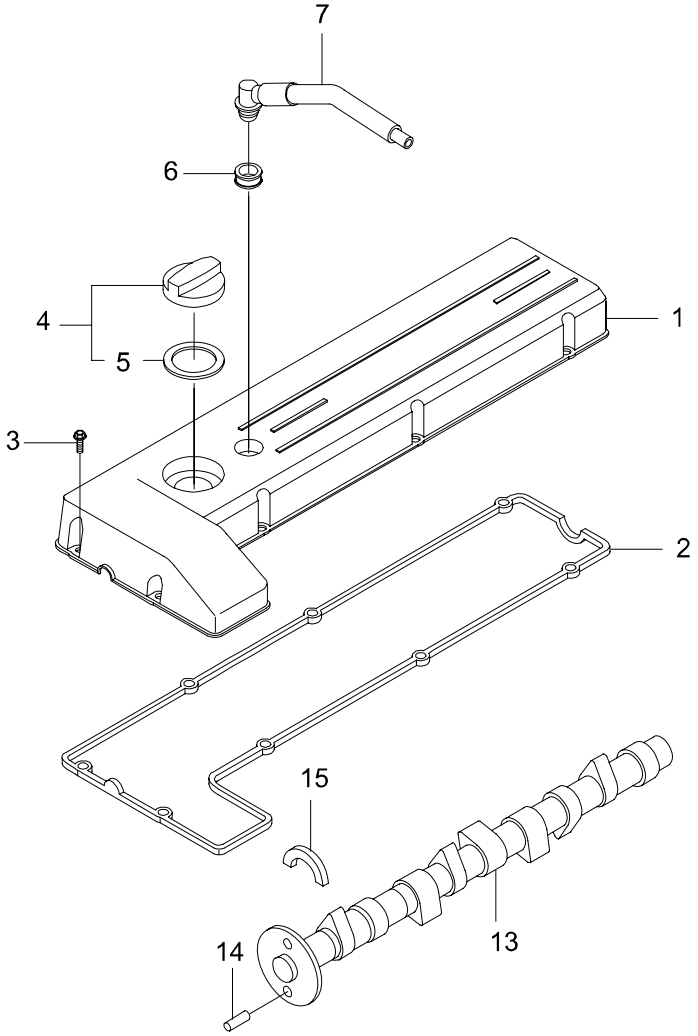

1220 CYLINDER HEAD COVER & CAMSHAFT(OM600)

ITC	KEY NO. PART NO	PART NAME OPTION	L/R	T/M	DRV	MODEL 662LA									EFF. DATE FROM	EFF. DATE TO	REMARK
	[01] 6620105230	*COVER ASSY-CYLINDER HEAD*				1									02'1101	06'0228	
	[02] 6020160221	*GASKET-CYLINDER HEAD COVER*				1									02'1101	06'0228	
	[03] 914005006009	*BOLT*				8									02'1101	06'0228	M6X25
	[04] 1610183102	*CAP ASSY-OIL FILLER*				1									02'1101	06'0228	
	[05] 1610183080	*GASKET*				1									02'1101	06'0228	
	[06] 6010160163	*RING-SEAL*				1									02'1101	03'1001	
O	6610163063					1									03'1002	06'0228	
	[07] 6620104170	*PIPE ASSY-BREATHER*				1									02'1101	06'0228	
	[13] 6620503001	*CAMSHAFT ASSY*				1									02'1101	06'0228	
	[14] 6019970010	*PIN-CYLINDRICAL*				1									02'1101	06'0228	
	[15] 6010510073	*LOCK ASSY*				1									02'1101	06'0228	

1310 CHAIN DRIVE(OM600)

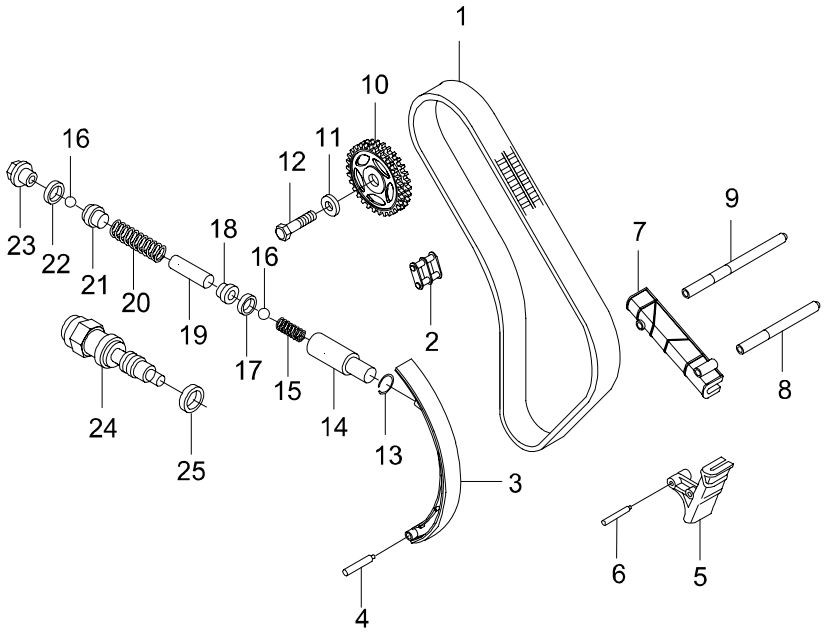

1310 CHAIN DRIVE(OM600)

ITC	KEY NO. PART NO	PART NAME OPTION	L/R	T/M	DRV	MODEL 662LA									EFF. DATE FROM	EFF. DATE TO	REMARK
	[01]	*CHAIN-DOUBLE BUSH*															
	0039975394					1									02'1101	04'0524	WITH LINK(continuous linked chain)
Y	6629973094					1									04'0525	06'0228	WITH LINK(CONTINUOUS LINKED CHAIN)
	0039975594					1									02'1101	06'0228	W/O LINK(REQUIRES ADDITIONAL SPLIT LINK)
	[02]	*LINK-CHAIN LOCK*															
	0009972898					1									02'1101	06'0228	
	[03]	*RAIL ASSY-SLIDING*															
	6610503016					1									02'1101	06'0228	
	[04]	*PIN-CYLINDRICAL*															
	000007008103					3									02'1101	06'0228	
	[05]	*RAIL-SLIDING*															
	6610523116					1									02'1101	06'0228	
	[06]	*PIN-CYLINDRICAL*															
	000007008103					3									02'1101	06'0228	
	[07]	*RAIL-SLIDING*															
	6610523016					1									02'1101	06'0228	
	[08]	*PIN*															
	6010520674					2									02'1101	06'0228	
	[09]	*PIN*															
	6010520774					1									02'1101	06'0228	
	[10]	*SPROCKET-CAMSHAFT*															
	6010520001					1									02'1101	06'0228	
	[11]	*WASHER*															
	6019901940					1									02'1101	06'0228	
	[12]	*BOLT*															
	6610513071					1									02'1101	06'0228	
	[13]	*RING-SNAP*															
	007993016200					1									02'1101	06'0228	

1310 CHAIN DRIVE(OM600)

ITC	KEY NO. PART NO	PART NAME OPTION	L/R	T/M	DRV	MODEL 662LA									EFF. DATE FROM	EFF. DATE TO	REMARK
	[14] 6010520274	*PIN*				1									02'1101	06'0228	
	[15] 1159934203	*SPRING-COMPRESSION*				1									02'1101	06'0228	
	[16] 005401305000	*BALL*				2									02'1101	06'0228	5MM
	[17] 0069977645	*RING-SEAL*				1									02'1101	06'0228	
	[18] 1020520076	*WASHER*				1									02'1101	06'0228	
	[19] 6019910001	*PIN*				1									02'1101	06'0228	
	[20] 6219930601	*SPRING-COMPRESSION*				1									02'1101	06'0228	
	[21] 6210520135	*RACE-BALL*				1									02'1101	06'0228	
	[22] 007603025400	*RING-SEAL*				1									02'1101	06'0228	A25X30
	[23] 6019970130	*PLUG ASSY*				1									02'1101	06'0228	
	[24] 6610503011	*TIGHTENER ASSY-CHAIN*				1									02'1101	06'0228	
	[25] 007603027101	*RING-SEAL*				1									02'1101	06'0228	A27X33

1320 BELT TIGHTENER(OM600)

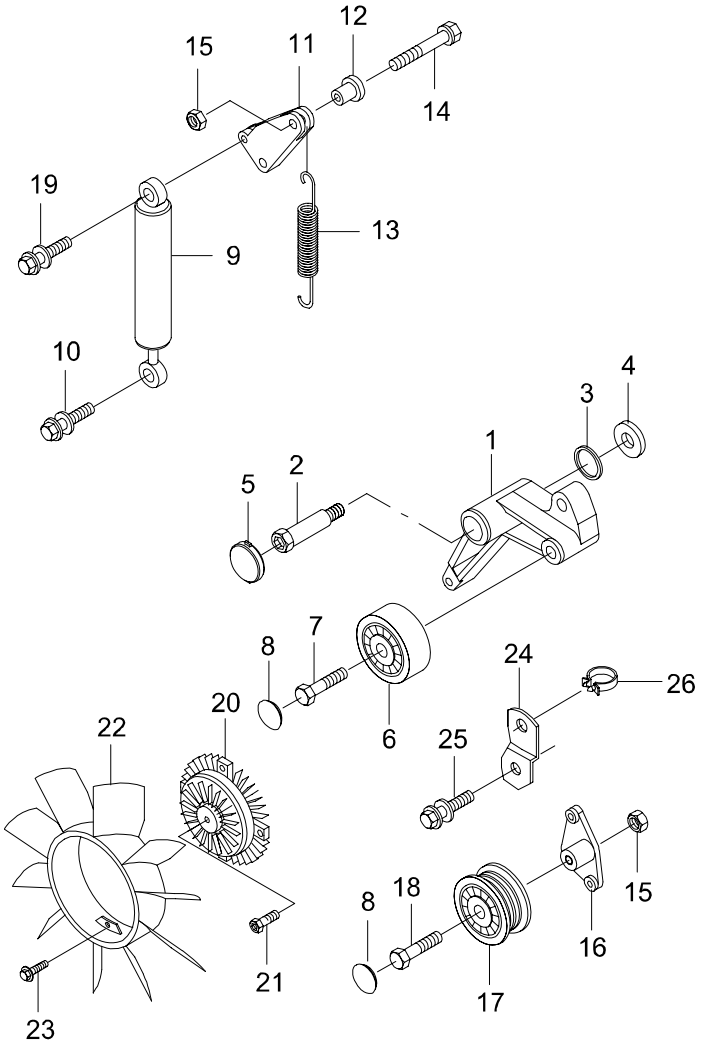

1320 BELT TIGHTENER(OM600)

ITC	KEY NO. PART NO	PART NAME OPTION	L/R	T/M	DRV	MODEL 662LA									EFF. DATE FROM	EFF. DATE TO	REMARK
	[01] 6062000073	*LEVER ASSY-TIGHTENER*				1									02'1101	06'0228	
	[02] 6062020120	*BOLT-BEARING*				1									02'1101	06'0228	
	[03] 6062020060	*RING-SEAL*				1									02'1101	06'0228	
	[04] 6069900040	*WASHER*				1									02'1101	06'0228	
	[05] 6062020022	*COVER-LOCKER*				1									02'1101	06'0228	
	[06] 6612003070	*PULLEY ASSY-BELT TIGHTENER*				1									02'1101	06'0228	
	[07] 6619903212	*BOLT*				1									02'1101	06'0228	
	[08] 6612023022	*COVER-IDLER PULLEY*				2									02'1101	06'0228	
	[09] 6042000214	*SHOCK ABSORBER ASSY*				1									02'1101	03'0720	
Y	6622003114					1									03'0721	06'0228	
	[10] 914008007000	*BOLT*				1									02'1101	06'0228	M7X35
	[11] 6012001273	*LEVER ASSY-SPRING TIGHTENER*				1									02'1101	06'0228	
	[12] 6012020053	*SPACER*				1									02'1101	06'0228	
	[13] 6619933510	*SPRING ASSY-TENSION*				1									02'1101	06'0228	
	[14] 914010008020	*SCREW*				1									02'1101	06'0228	M8X100

1320 BELT TIGHTENER(OM600)

ITC	KEY NO. PART NO	PART NAME OPTION	L/R	T/M	DRV	MODEL 662LA									EFF. DATE FROM	EFF. DATE TO	REMARK
	[15]	*NUT*															
	304032008006					2									02'1101	06'0228	M8
	[16]	*BRKT ASSY-IDLER*															
	6612003040					1									02'1101	06'0228	
	6012020640	A/CON				1									02'1101	06'0228	
	[17]	*PULLEY ASSY-IDLER*															
	6612003170					1									02'1101	06'0228	
	[18]	*BOLT*															
	6619903212					1									02'1101	06'0228	
	[19]	*BOLT*															
	914007008054					1									02'1101	06'0228	M8X30
	[20]	*VISCOUS-CLUTCH*															
	6612003722					1									02'1101	03'0701	
Y	6612003922					1									03'0702	06'0228	
	[21]	*BOLT*															
	000912010078					1									02'1101	06'0228	M10X45
	[22]	*FAN ASSY*															
	6062000023					1									02'1101	06'0228	
	6612003623					1									02'0901	06'0228	
	[23]	*BOLT*															
	914020006017					3									02'1101	06'0228	M6X14
	914020006003					4									02'1101	06'0228	M6X25
	[24]	*BRKT*															
	6011594240					1									02'1101	06'0228	
	[25]	*BOLT*															
	6619903401					1									02'1101	06'0228	M8X115
	914005006001	A/CON				1									02'1101	06'0228	M6X30
	914005008020					1									02'1101	06'0228	M8X50
	[26]	*CLAMP*															
	6619953344					1									02'1101	06'0228	

1330 TIMING CASE(OM600)

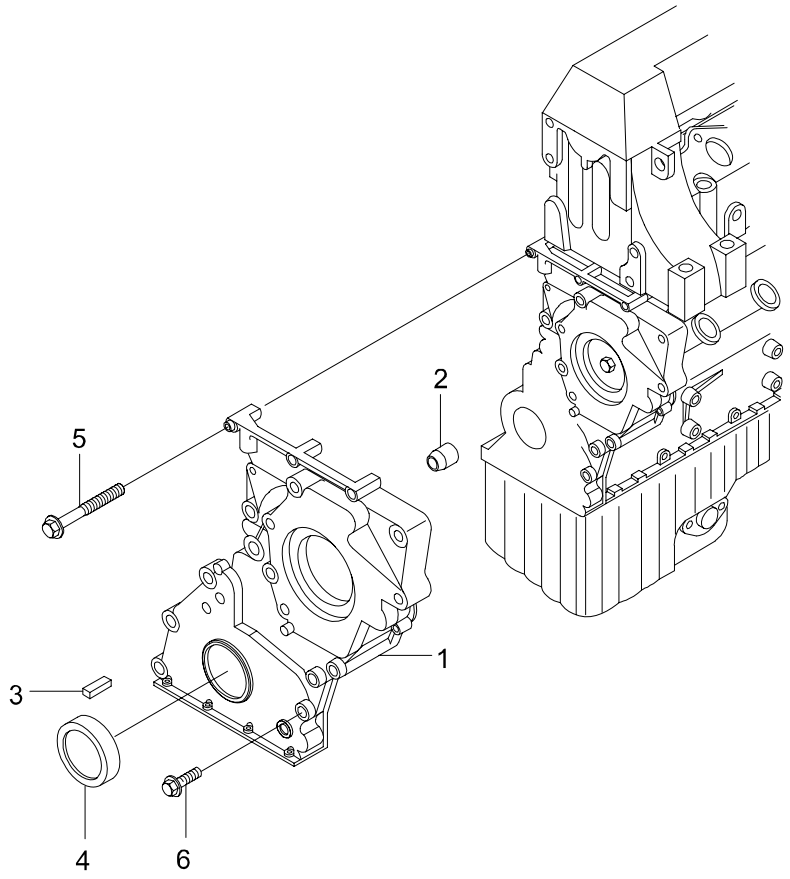

1330 TIMING CASE(OM600)

ITC	KEY NO. PART NO	PART NAME OPTION	L/R	T/M	DRV	MODEL 662LA									EFF. DATE FROM	EFF. DATE TO	REMARK
	[01] 6610155101	*COVER-TIMING GEAR CASE*				1									02'1101	06'0228	
	[02] 6019920525	*PIN-SPRING*				1									02'1101	06'0228	
	[03] 6019920125	*PIN-SPRING*				1									02'1101	06'0228	
	[04] 6619973646	*SEALING-CRANKSHAFT FRT*				1									02'1101	06'0228	
	[05] 914010006009	*BOLT*				5									02'1101	06'0228	M6X40
	914010006016					5									02'1101	06'0228	M6X60
	914010006011					3									02'1101	06'0228	M6X70
	[06] 914034008001	*BOLT*				1									02'1101	06'0228	M6X80

1340 T.D.C SENSOR BRACKET(OM600)

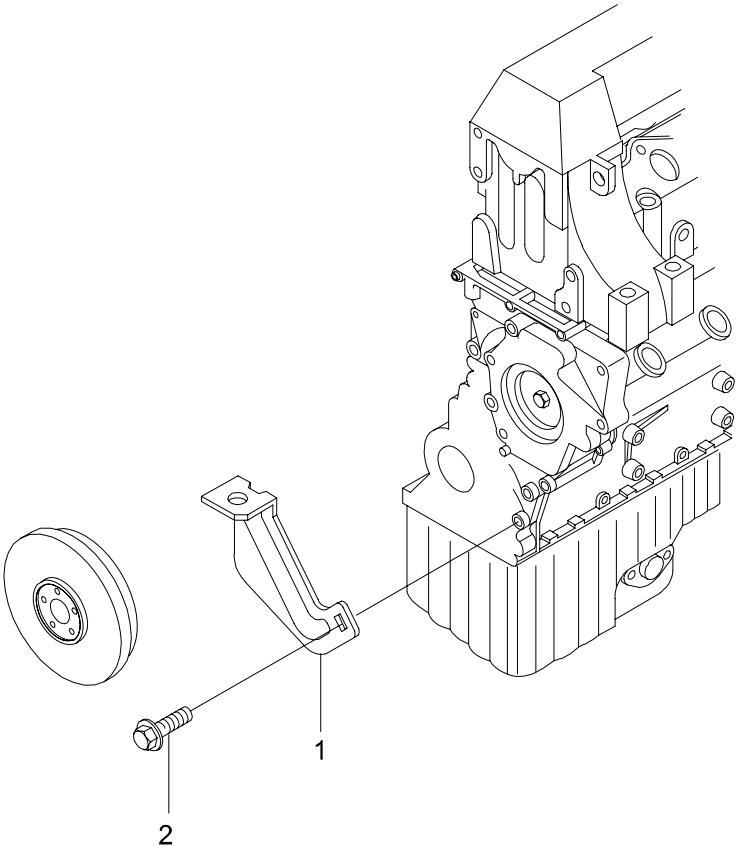

1340 T.D.C SENSOR BRACKET(OM600)

ITC	KEY NO. PART NO	PART NAME OPTION	L/R	T/M	DRV	MODEL 662LA									EFF. DATE FROM	EFF. DATE TO	REMARK
	[01] 6031500073	*BRKT ASSY-T.D.C SENSOR*				1									02'1101	06'0228	
	[02] 914005006020	*BOLT*				1									02'1101	06'0228	M6X16

1350 BELT SYSTEM

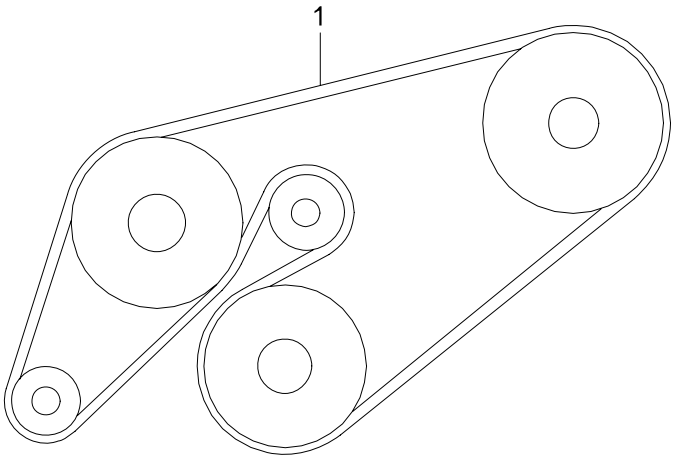

1350 BELT SYSTEM

ITC	KEY NO. PART NO	PART NAME OPTION	L/R	T/M	DRV	MODEL 662LA									EFF. DATE FROM	EFF. DATE TO	REMARK
	[01]	*BELT-POLY GROOVED*															
	0119971892	W/O A/CON				1									02'1101	06'0228	L=2055
	0089973492	A/CON				1									02'1101	06'0228	L=2120

1410 ENGINE WIRING(OM600)

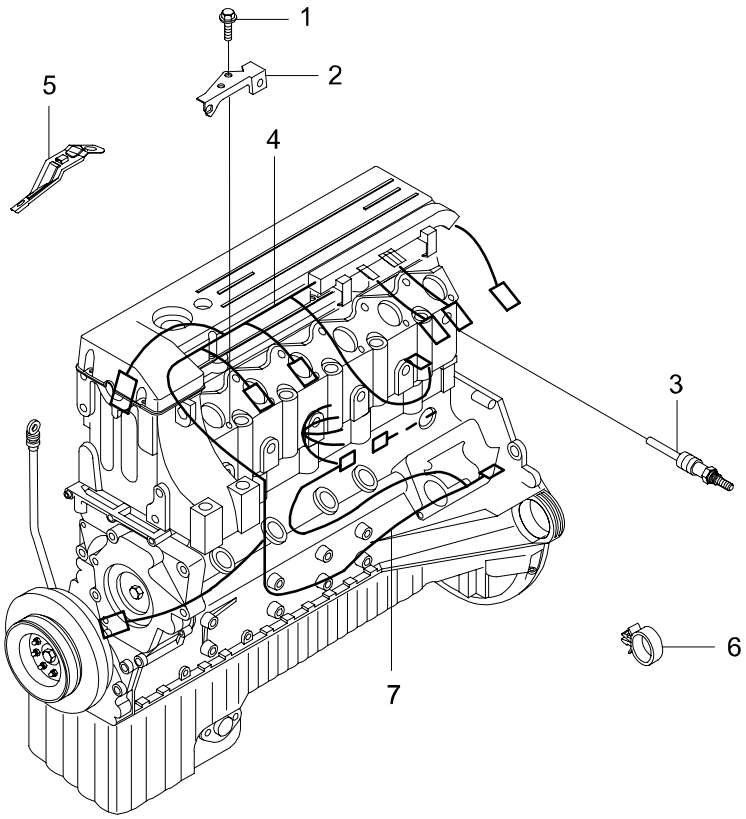

1410 ENGINE WIRING(OM600)

ITC	KEY NO. PART NO	PART NAME OPTION	L/R	T/M	DRV	MODEL 662LA									EFF. DATE FROM	EFF. DATE TO	REMARK
	[01]	*BOLT*															
	000933006016					1									02'1101	06'0228	M6X12
	[02]	*BRKT-GLOW PLUG CABLE*															
	6611593140					1									02'1101	06'0228	
	[03]	*PLUG-GLOW*															
	6611593101					5									02'1101	06'0228	
	[04]	*WIRING ASSY-PREGLOW*															
	6625403310					1									02'1101	06'0228	
N	6625405510	KOR2004				1									02'1001	06'0228	
	[05]	*BRKT-GLOW PLUG CABLE*															
	6011591340					1									02'1101	06'0228	
	[06]	*CLAMP*															
	6619953244					1									02'1101	03'1225	
O	0009958144	KOR2004				1									03'1226	06'0228	
	[07]	*WIRING ASSY-ALTERNATOR EXTENSION*															
	6615413700					1									02'1201	03'0106	2PIN(PULSE CONNECTOR ANOTHER TYPE)
N	6615413800					1									03'0107	06'0228	3PIN(PULSE CONNECTOR INTEGRATED TYPE)

1420 SENDER UNIT & SWITCH(OM600)

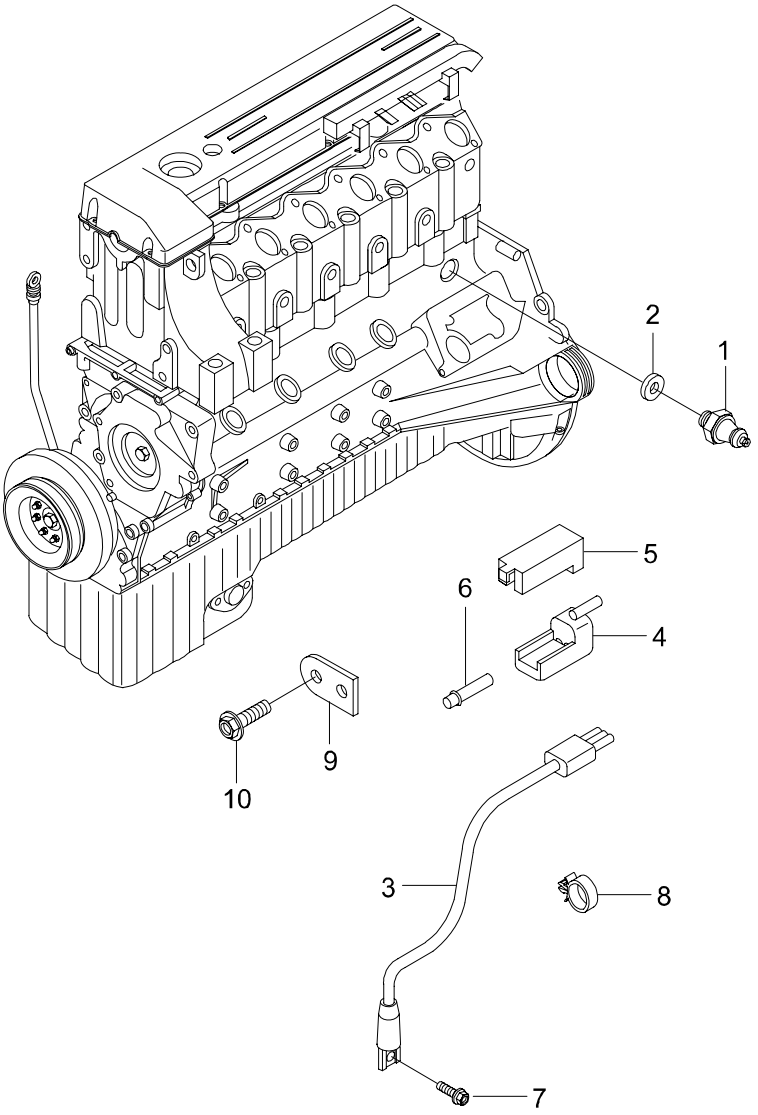

1420 - 01

1420 SENDER UNIT & SWITCH(OM600)

ITC	KEY NO. PART NO	PART NAME OPTION	L/R	T/M	DRV	MODEL 662LA									EFF. DATE FROM	EFF. DATE TO	REMARK
	[01] 6615423117	*SWITCH ASSY-OIL PRESSURE*				1									02'1101	06'0228	
	[02] 007603012110	*RING-SEAL*				1									02'1101	06'0228	
	[03] 6625423117	*SENSOR ASSY-ENGINE SPEED*				1									02'1101	06'0228	
	[04] 0085450928	*CONNECTOR*		A		1									02'1101	06'0228	
	[05] 0085451128	*COVER-HOUSING*		A		1									02'1101	06'0228	
	[06] 0085451828	*PIN-PLUG*		A		2									02'1101	06'0228	
	[07] 914020006013	*BOLT*		A		1									02'1101	06'0228	M6X16
	[08] 6619953344	*CLAMP*		A		1									02'1101	06'0228	
	[09] 6011591540	*BRKT-SPEED SENSOR UNIT*		A		1									02'1101	06'0228	
	[10] 914005006002	*BOLT*		A		1									02'1101	06'0228	M6X12

1451 ALTERNATOR(DSL)

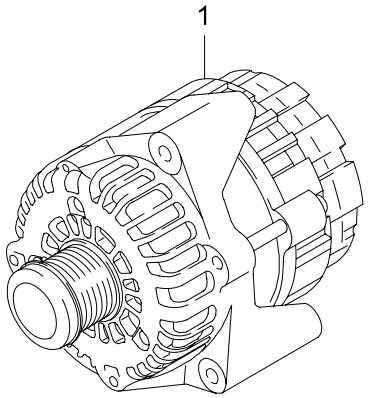

1451 ALTERNATOR(DSL)

ITC	KEY NO. PART NO	PART NAME OPTION	L/R	T/M	DRV	MODEL 662LA									EFF. DATE FROM	EFF. DATE TO	REMARK
	[01]	*ALTERNATOR ASSY*															
	6621545102					1									02'1101	03'0106	DELPHI(14V75A ASVR)
O	6621545402					1									03'0107	06'0228	DELPHI(14V75A ASVR)

1453 ALTERNATOR MOUNTING

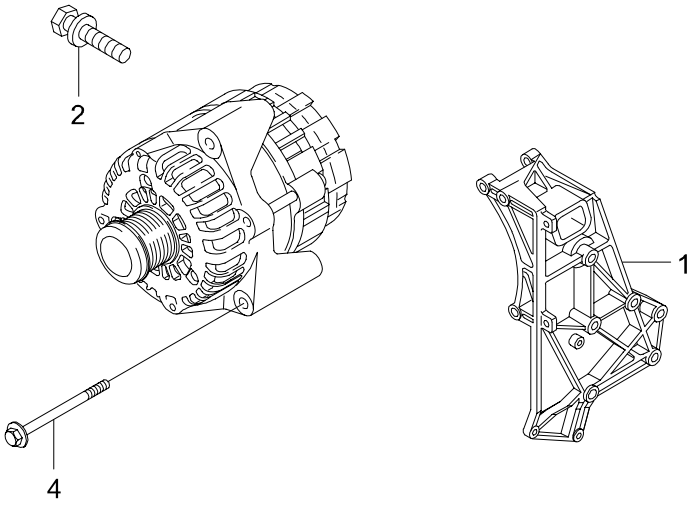

1453 ALTERNATOR MOUNTING

ITC	KEY NO. PART NO	PART NAME OPTION	L/R	T/M	DRV	MODEL 662LA									EFF. DATE FROM	EFF. DATE TO	REMARK
	[01] 6611503070	*BRKT ASSY-ALTERNATOR*				1									02'1101	06'0228	
	[02] 914005008020	*BOLT*				1									02'1101	06'0228	M8X50
	[04] 914010010021	*BOLT*				2									02'1101	06'0228	M10X90

1461 STARTING MOTOR(DSL)

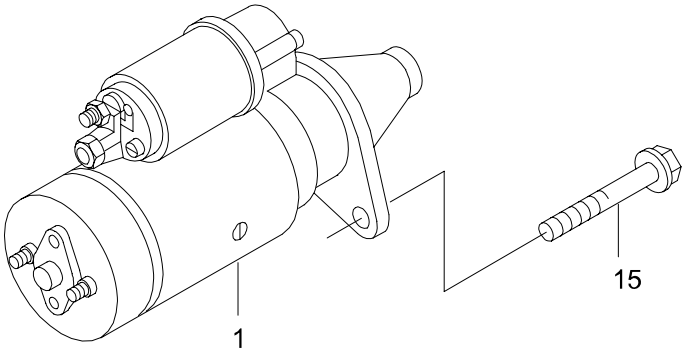

1461 STARTING MOTOR(DSL)

ITC	KEY NO. PART NO	PART NAME OPTION	L/R	T/M	DRV	MODEL 662LA									EFF. DATE FROM	EFF. DATE TO	REMARK
	[01]	*STARTER ASSY*															
	6611513501					1									02'1101	02'1121	
O	6611513701					1									02'1101	06'0228	DELCOREMY MADE
	6611513801					1									02'1029	06'0228	VALEO MADE
	[15]	*BOLT*															
	914010010021					2									02'1101	06'0228	M10X90

1520 COOLING SYSTEM(DSL)

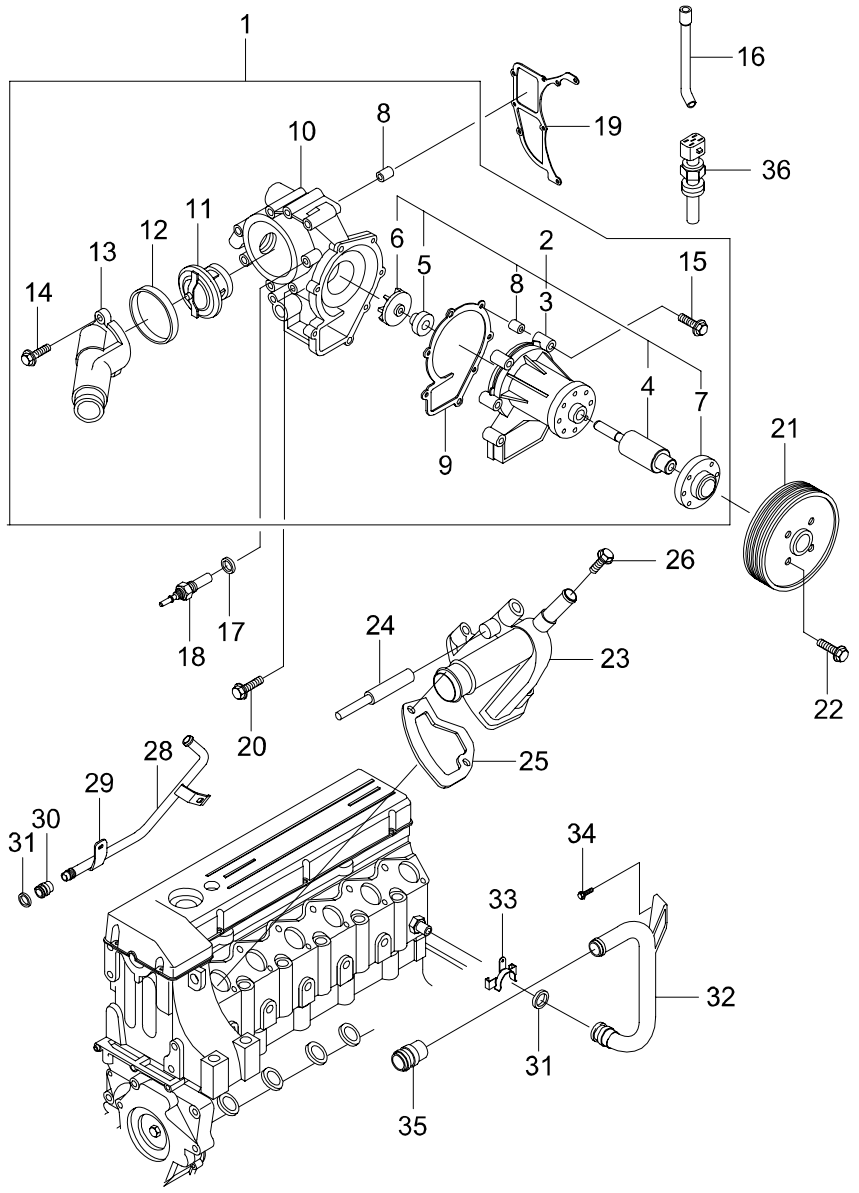

1520 COOLING SYSTEM(DSL)

ITC	KEY NO. PART NO	PART NAME OPTION	L/R	T/M	DRV	MODEL 662LA	EFF. DATE FROM	EFF. DATE TO	REMARK
	[01]	*PUMP ASSY-WATER*							
	6612004301					1	02'1101	03'0812	
Y	6612005001					1	03'0813	06'0228	
	[02]	*HOUSING ASSY-BEARING*							
	6612003620					1	02'1101	03'0812	
Y	6612004120					1	03'0813	06'0228	
	[03]	*HOUSING-BEARING*							
	6612013010					1	02'1101	06'0228	
	[04]	*BEARING-WATER PUMP*							
	6619803115					1	02'1101	06'0228	
	[05]	*SEAL*							
	0002019319					1	02'1101	06'0228	
	[06]	*IMPELLER-WATER PUMP*							
	6052010107					1	02'1101	06'0228	
	[07]	*FLANGE-WATER PUMP*							
	6612013039					1	02'1101	06'0228	
	[08]	*PIN-SPRING*							
	6019920225					4	02'1101	06'0228	
	[09]	*GASKET-BEARING HOUSING*							
	6612013080					1	02'1101	05'1220	
Y	6652010280					1	05'1221	06'0228	
	[10]	*HOUSING-WATER PUMP*							
	6612013301					1	02'1101	06'0228	
	[11]	*THERMOSTAT-WATER PUMP*							
	6062030475					1	02'1101	06'0228	
	[12]	*RING-SEAL*							
	6012030076					1	02'1101	06'0228	
	[13]	*COVER-COOLING WATER INLET*							
	6612033274					1	02'1101	06'0228	

1520 COOLING SYSTEM(DSL)

ITC	KEY NO. PART NO	PART NAME OPTION	L/R	T/M	DRV	MODEL 662LA	EFF. DATE FROM	EFF. DATE TO	REMARK
	[14] 914005006009	*BOLT*				2	02'1101	06'0228	M6X25
	[15] 914005006017	*BOLT*				7	02'1101	06'0228	M6X35
	[16] 6612033123	*TUBE-WATER PUMP*				1	02'1101	04'0324	
	[17] 007603014100	*RING-SEAL*				1	02'1101	06'0228	A14X18
	[18] 6615453324	*SENSOR ASSY-WATER PUMP*				1	02'1101	06'0228	
	[19] 6062010180	*GASKET-WATER PUMP HOUSING*				1	02'1101	06'0228	
	[20] 914005006022	*BOLT*				7	02'1101	06'0228	M6X50
	[21] 6612053010	*PULLEY-WATER PUMP*				1	02'1101	06'0228	
	[22] 914005006020	*BOLT*				4	02'1101	06'0228	M6X16
	[23] 6612003156	*PORT ASSY-OUTLET*				1	02'1101	06'0228	
	[24] 6619903178	*TUBE-OUTLET*				1	02'1101	06'0228	
	[25] 6012030280	*GASKET-OUTLET*				1	02'1101	06'0228	
	[26] 914010006008	*BOLT*				2	02'1101	06'0228	M6X35
	[28] 6622005752	*PIPE ASSY-INLET*			L	1	02'1101	06'0228	
	6622004252				R	1	02'1101	06'0228	
	[29] 6622033340	*BRKT-INLET PIPE*				1	02'1101	06'0228	

1520 COOLING SYSTEM(DSL)

ITC	KEY NO. PART NO	PART NAME OPTION	L/R	T/M	DRV	MODEL 662LA									EFF. DATE FROM	EFF. DATE TO	REMARK
	[30] 6012030078	*CONNECTOR*				2									02'1101	06'0228	
	[31] 0129975148	*RING-O*				2									02'1101	06'0228	
	[32] 6612004352	*PIPE ASSY-OUTLET* GENELAL AREA			R	1									02'1101	06'0228	ALTERNATOR 75A
	6622004152				L	1									02'0901	06'0228	
	[33] 6012030145	*CLAMP*				1									02'1101	06'0228	
	[34] 914005006020	*BOLT*				1									02'1101	06'0228	M6X16
	[35] 6012030078	*CONNECTOR*				1									02'1101	06'0228	
	[36] 1615423117	*SENSOR ASSY-COOLANT* KOR2004				1									02'1101	06'0228	1 NTC

1530 OIL PAN & PUMP(OM600)

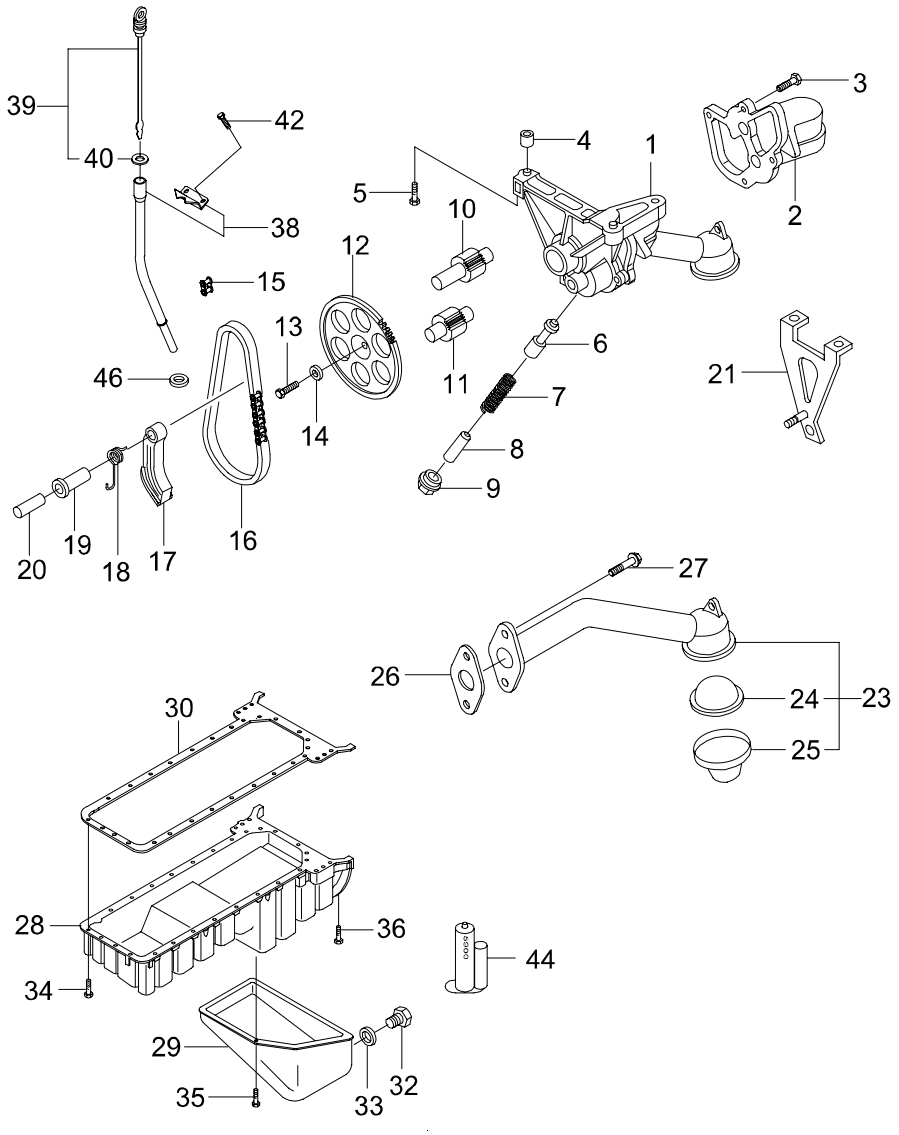

1530 OIL PAN & PUMP(OM600)

ITC	KEY NO. PART NO	PART NAME OPTION	L/R	T/M	DRV	MODEL 662LA	EFF. DATE FROM	EFF. DATE TO	REMARK
	[01] 6621804001	*PUMP ASSY-OIL*				1	02'1101	06'0228	
	[02] 6611813020	*COVER-OIL PUMP*				1	02'1101	06'0228	
	[03] 914005006008	*BOLT*				4	02'1101	06'0228	M6X22
	[04] 6019920425	*PIN-SPRING*				2	02'1101	06'0228	
	[05] 914020008009	*BOLT*				3	02'1101	06'0228	M8X35
	[06] 6611813142	*PISTON-OIL PUMP RELIEF VALVE*				1	02'1101	06'0228	
	[07] 6039930201	*SPRING*				1	02'1101	06'0228	
	[08] 6011810174	*PIN-OIL PUMP RELIEF VALVE*				1	02'1101	06'0228	
	[09] 6031810056	*PLUG-OIL PUMP RELIEF VALVE*				1	02'1101	06'0228	
	[10] 1621803007	*SHAFT ASSY-OIL PUMP DRIVE*				1	02'1101	06'0228	
	[11] 1161800208	*SHAFT ASSY-OIL PUMP DRIVEN*				1	02'1101	06'0228	
	[12] 1611813012	*SPROCKET-OIL PUMP*				1	02'1101	06'0228	
	[13] 000933008040	*BOLT*				1	02'1101	06'0228	M8X20
	[14] 6019900940	*WASHER*				1	02'1101	06'0228	
	[15] 0009971498	*LINK-CONNECTOR*				1	02'1101	05'0616	
Y	0009973298					1	05'0617	06'0228	

1530 OIL PAN & PUMP(OM600)

ITC	KEY NO. PART NO	PART NAME OPTION	L/R	T/M	DRV	MODEL 662LA	EFF. DATE FROM	EFF. DATE TO	REMARK
	[16] 0039977394	*CHAIN-OIL PUMP ROLLER*				1	02'1101	06'0228	
	[17] 6011810159	*TENSIONER-OIL PUMP CHAIN*				1	02'1101	06'0228	
	[18] 6019930120	*SPRING-OIL PUMP CHAIN*				1	02'1101	06'0228	
	[19] 6011810150	*BUSH*				1	02'1101	06'0228	
	[20] 000007008106	*PIN-CYLINDRICAL*				1	02'1101	06'0228	
	[21] 6621803040	*BRKT-OIL STRAINER*				1	02'1101	06'0228	
	[23] 6621803252	*STRAINER ASSY-OIL PUMP*				1	02'1101	06'0228	
	[24] 6011800155	*SCREEN ASSY-OIL PUMP*				1	02'1101	06'0228	
	[25] 6611860101	*BASKET*				1	02'1101	06'0228	
	[26] 6611863080	*GASKET-OIL STRAINER*				1	02'1101	04'0514	
Y	6621863080					1	04'0515	06'0228	
	[27] 914005006005	*BOLT*				2	02'1101	06'0228	M6X20
	[28] 6620145602	*PAN ASSY-OIL* EGR				1	02'1101	03'0313	
Y	6620146202	EGR				1	03'0314	04'0309	
O	6620146502	EGR				1	04'0310	06'0228	
	[29] 6620103328	*PAN ASSY-OIL LWR*				1	02'1101	06'0228	
	[30] 6050140022	*GASKET-OIL PAN*				1	02'1101	06'0228	

1530 OIL PAN & PUMP(OM600)

ITC	KEY NO. PART NO	PART NAME OPTION	L/R	T/M	DRV	MODEL 662LA	EFF. DATE FROM	EFF. DATE TO	REMARK
	[32]	*PLUG-DRAIN*							
	6629973130					1	02'1101	06'0228	
	[33]	*WASHER*							
	007603012106					1	02'1101	06'0228	A12X18
	[34]	*BOLT*							
	914011008000					4	02'1101	06'0228	M8X40
	[35]	*BOLT*							
	6629903001					3	02'1101	06'0228	M6X100
	914010006012					4	02'1101	06'0228	M6X85
	914145006401					21	02'1101	06'0228	M6X20
	914007006007					19	02'1101	06'0228	M6X16
	914005006005					19	02'1101	06'0228	M6X20
	[36]	*BOLT*							
	6629903001					3	02'1101	06'0228	M6X100
	914010006012					4	02'1101	06'0228	M6X85
	914005006005					21	02'1101	06'0228	M6X20
	914005006020					19	02'1101	06'0228	M6X16
	[38]	*TUBE ASSY-OIL DIPSTICK*							
	6620104866					1	02'1101	06'0228	
	[39]	*GAUGE-OIL DIPSTICK*							
	6620104772					1	02'1101	06'0228	
	[40]	*RING-O*							
	6619973045					1	02'1101	06'0228	
	[42]	*BOLT*							
	914005008011					1	02'1101	06'0228	M8X16
	[44]	*SEALANT*							
	0029897320					1	02'1101	04'0314	
O	66198956A0					1	04'0315	06'0228	50§¢
	[46]	*RING-O*							
	6619970045					1	02'1201	06'0228	

1540 OIL FILTER & COOLER(OM600)

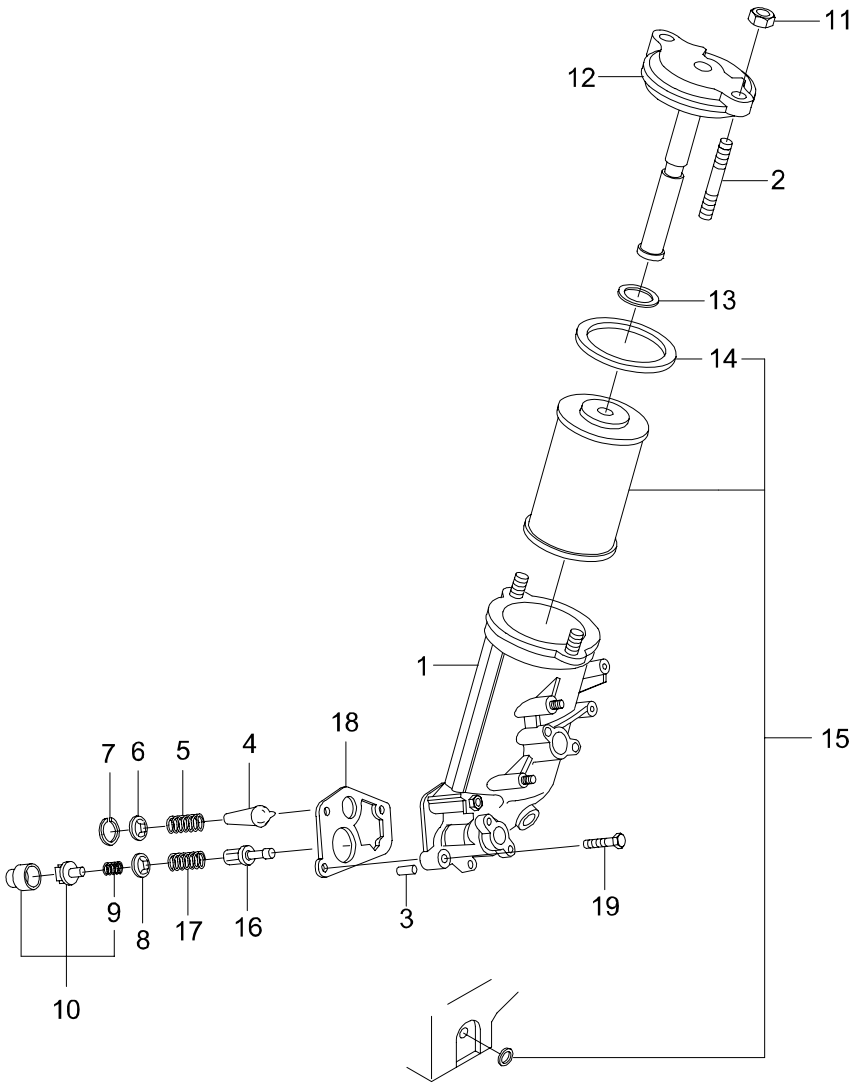

1540 - 01

1540 OIL FILTER & COOLER(OM600)

ITC	KEY NO. PART NO	PART NAME OPTION	L/R	T/M	DRV	MODEL 662LA									EFF. DATE FROM	EFF. DATE TO	REMARK
	[01]	*FILTER ASSY-OIL*															
	6611803610					1									02'1101	04'0516	
O	6621803210					1									04'0517	06'0228	T/W 1553005022
	[02]	*STUD-OIL FILTER HOUSING COVER*															
	6159900105					2									02'1101	06'0228	
	[03]	*PIN-SPRING*															
	6019920425					2									02'1101	06'0228	
	[04]	*VALVE-OIL FILTER BYPASS*															
	6011840132					1									02'1101	06'0228	
	[05]	*SPRING-OIL FILTER BYPASS*															
	6619933201					1									02'1101	06'0228	
	[06]	*RETAINER*															
	1021840031					1									02'1101	06'0228	
	[07]	*RING-SNAP*															
	6619943135					1									02'1101	06'0228	
	[08]	*RETAINER*															
	6031840031					1									02'1101	06'0228	
	[09]	*SPRING*															
	6019932101					1									02'1101	06'0228	
	[10]	*SEAT-VALVE*															
	6031840130					1									02'1101	06'0228	
	[11]	*NUT*															
	6159900050					2									02'1101	06'0228	
	[12]	*COVER ASSY-OIL FILTER HOUSING*															
	6011800038					1									02'1101	06'0228	
	[13]	*RING-O*															
	0049971648					2									02'1101	06'0228	
	[14]	*RING-O*															
	0159979548					1									02'1101	06'0228	
	0139978748					1									02'1101	06'0228	

1540 OIL FILTER & COOLER(OM600)

ITC	KEY NO. PART NO	PART NAME OPTION	L/R	T/M	DRV	MODEL 662LA									EFF. DATE FROM	EFF. DATE TO	REMARK
	[15]	*ELEMENT KIT-OIL FILTER*															
	6611803409					1									02'1101	06'0228	
	[16]	*THERMOSTAT-OIL FILTER*															
	6031800075					1									02'1101	06'0228	
	[17]	*SPRING-OIL FILTER THERMOSTAT*															
	6619933101					1									02'1101	06'0228	
	[18]	*GASKET-OIL FILTER HOUSING*															
	6011840780					1									02'1101	06'0228	
	[19]	*BOLT*															
	914020008015					2									02'1101	06'0228	M8X40
	914034008004					2									02'1101	06'0228	M8X100

1550 ENGINE OIL COOLER

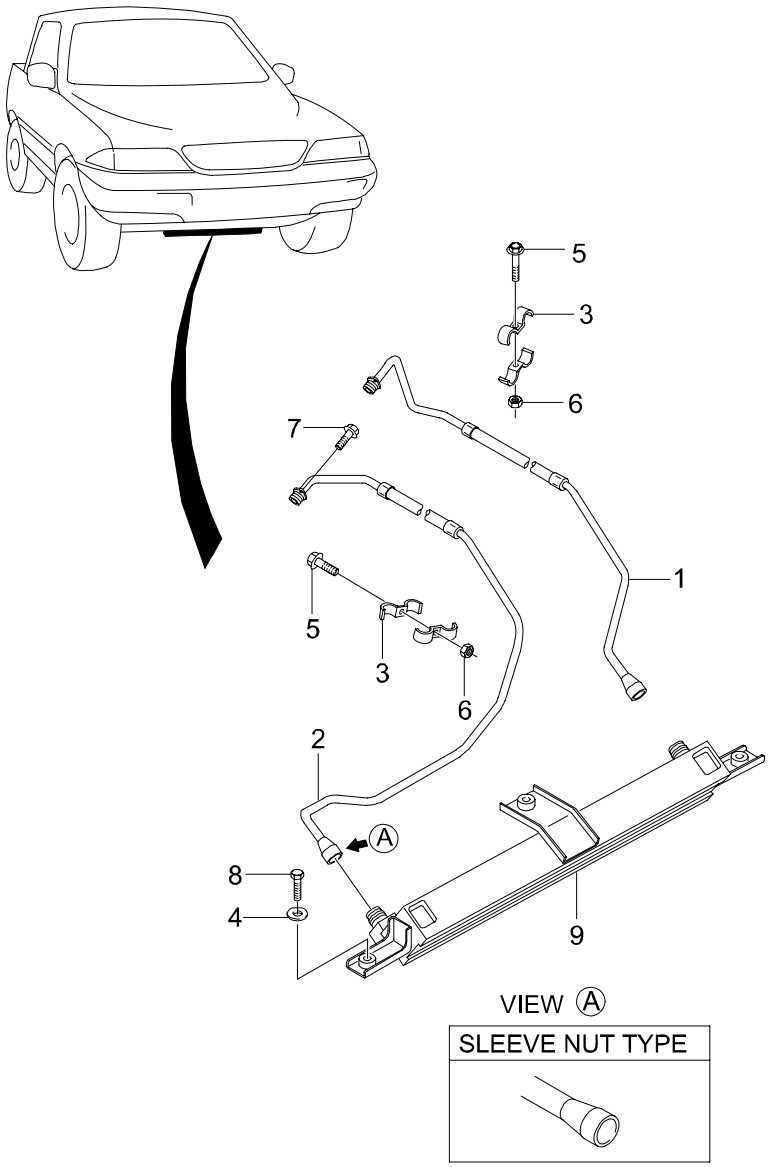

1550 ENGINE OIL COOLER

ITC	KEY NO. PART NO	PART NAME OPTION	L/R	T/M	DRV	MODEL 662LA									EFF. DATE FROM	EFF. DATE TO	REMARK
	[01]	*HOSE ASSY-COOLER & ENGINE*															
	1553005021					1									02'1201	04'0516	SLEEVE TYPE
N	1553005022					1									04'0517	06'0228	
	[02]	*HOSE ASSY-ENGINE TO COOLER*															
	1552005112					1									02'1201	06'0228	SLEEVE TYPE
	[03]	*CLIP*															
	1559103700					2									02'1201	06'0228	
	[04]	*WASHER*															
	4431203000					2									02'1201	06'0228	
	[05]	*SCREW*															
	9826406401					2									02'1201	06'0228	M6X1.0X40
	[06]	*NUT*															
	928840600D					2									02'1201	06'0228	M6X1.0
	[07]	*BOLT*															
	9170806151					4									02'1201	06'0228	M6X1.0X15
	[08]	*BOLT*															
	958140835D					2									02'1201	06'0228	M8X1.25X35
	[09]	*COOLER-ENGINE OIL*															
	1551005021					1									02'1201	06'0228	SLEEVE TYPE

1610 VACUUM PUMP(DSL)

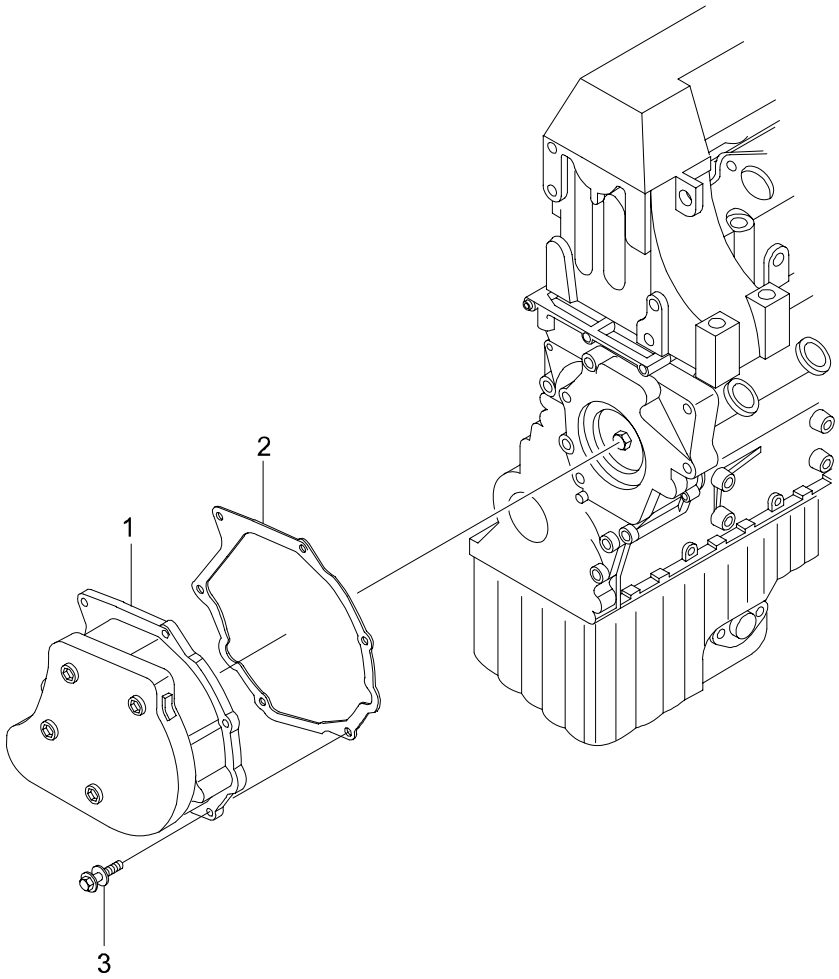

1610 VACUUM PUMP(DSL)

ITC	KEY NO. PART NO	PART NAME OPTION	L/R	T/M	DRV	MODEL 662LA									EFF. DATE FROM	EFF. DATE TO	REMARK
	[01]	*PUMP ASSY-VACUUM*															
	6612303465					1									02'1101	03'0415	
Y	6612303565					1									03'0416	06'0228	
	[02]	*GASKET-VACUUM PUMP*															
	6042380080					1									02'1101	06'0228	
	[03]	*BOLT*															
	914005006005					6									02'1101	06'0228	M6X20

1622 VACUUM SYSTEM(OM600)

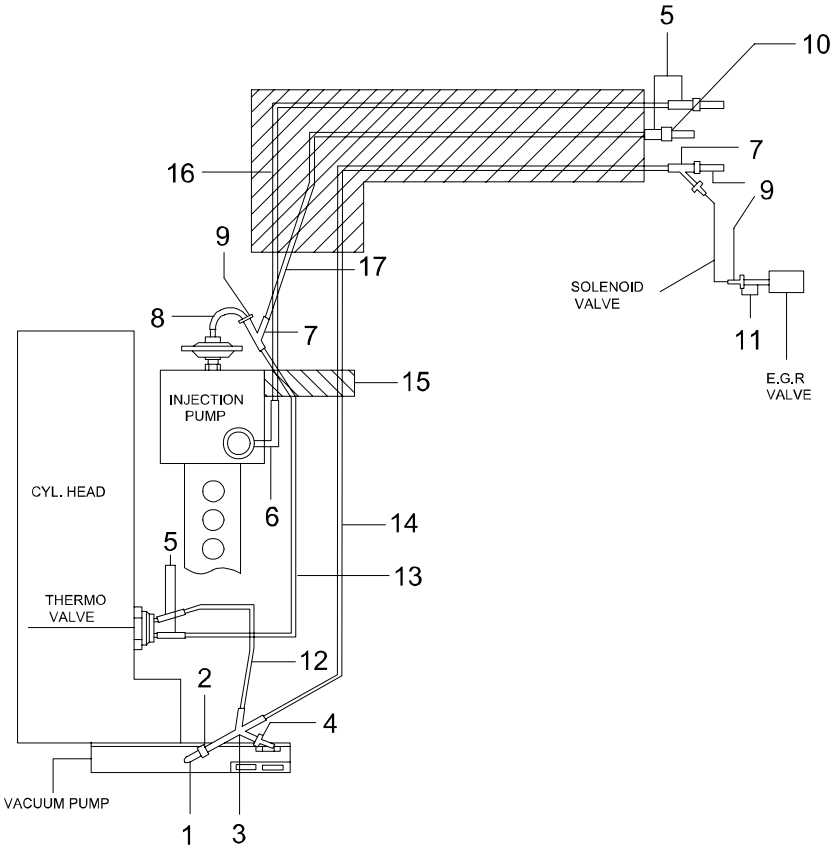

1622 VACUUM SYSTEM(OM600)

ITC	KEY NO. PART NO	PART NAME OPTION	L/R	T/M	DRV	MODEL 662LA									EFF. DATE FROM	EFF. DATE TO	REMARK
	[01] 1179970982	*HOSE-RUBBER*				1									02'1101	06'0228	
	[02] 0000780456	*FILTER-AIR*				1									02'1101	06'0228	
	[03] 6010780445	*DISTRIBUTOR-VACUUM LINE*				1									02'1101	05'1204	
Y	6620780845					1									05'1205	06'0228	
	[04] 1231580057	*CHOKE-VACUUM LINE*				1									02'1101	06'0228	
	[05] 1179970982	*HOSE-RUBBER*				1									02'1101	06'0228	
	[06] 1170780181	*HOSE-MOLDED*				1									02'1101	06'0206	
O	6620781081					1									06'0207	06'0228	
	[07] 6010780245	*DISTRIBUTOR-VACUUM LINE*				1									02'1101	05'1204	
Y	6620780745					1									05'1205	06'0228	
	[08] 1170780581	*HOSE-MOLDED*				1									02'1101	06'0228	
	[09] 1162760929	*CONNECTOR*				1									02'1101	06'0228	
	[10] 0000780856	*FILTER-CHOKE*				1									02'1101	06'0228	
	[11] 1170780781	*HOSE-MOLDED*				1									02'1101	06'0228	
	[12] 6619973152	*TUBE-VACUUM*				1									02'1101	06'0228	
	[13] 6629973052	*TUBE-VACUUM*				1									02'1101	06'0228	

1622 VACUUM SYSTEM(OM600)

ITC	KEY NO. PART NO	PART NAME OPTION	L/R	T/M	DRV	MODEL 662LA									EFF. DATE FROM	EFF. DATE TO	REMARK
	[14] 6629973152	*TUBE-VACUUM*				1									02'1101	06'0228	
	[15] 6615463330	*HOSE-INSULATING*				1									02'1101	06'0228	
	[16] 6629973252	*TUBE-VACUUM*				1									02'1101	06'0228	
	[17] 6629973352	*TUBE-VACUUM*				1									02'1101	06'0228	

1625 VACUUM SYSTEM(OLD,KOREA2004)

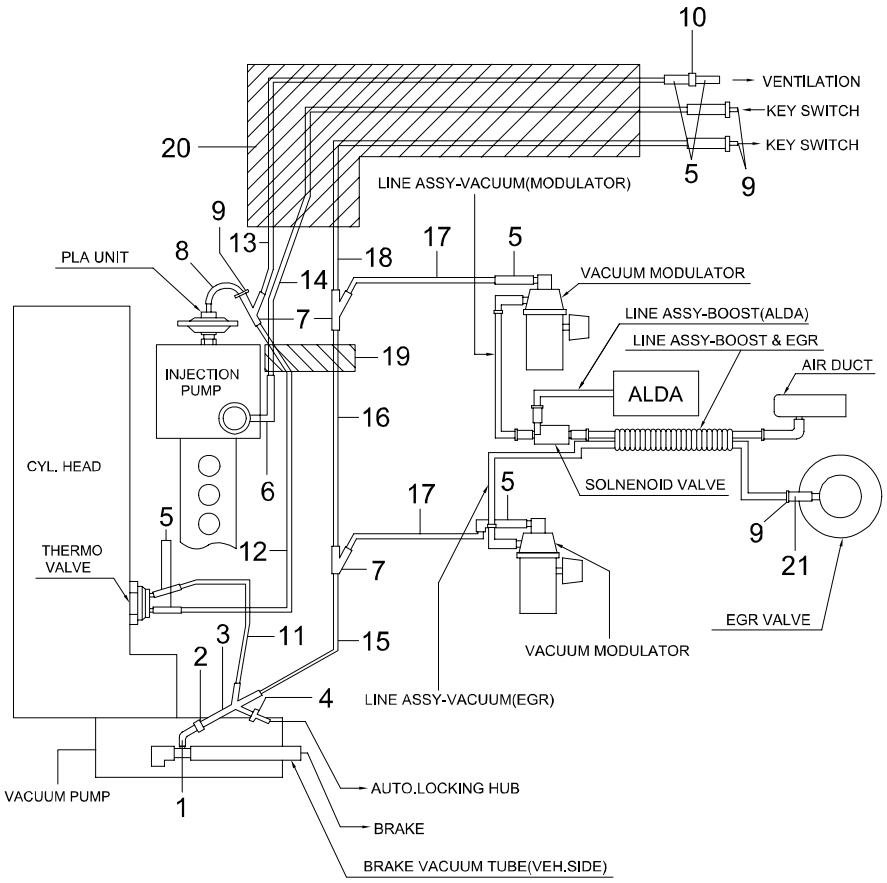

< ~ 2005.04.11 >

1625 VACUUM SYSTEM(OLD,KOREA2004)

ITC	KEY NO. PART NO	PART NAME OPTION	L/R	T/M	DRV	MODEL 662LA	EFF. DATE FROM	EFF. DATE TO	REMARK
	[01] 1179970982	*HOSE-RUBBER*				1	02'1101	06'0228	L=220
	[02] 0000780456	*FILTER-AIR*				1	02'1101	06'0228	
	[03] 6010780445	*DISTRIBUTOR-VACUUM LINE*				1	02'1101	05'1204	
Y	6620780845					1	05'1205	06'0228	
	[04] 1231580057	*CHOKE-VACUUM LINE*				1	02'1101	06'0228	
	[05] 1179970982	*HOSE-RUBBER*				1	02'1101	06'0228	L=40
	[06] 1170780181	*HOSE-MOLDED*				1	02'1101	06'0206	
O	6620781081					1	06'0207	06'0228	
	[07] 6010780245	*DISTRIBUTOR-VACUUM LINE*				1	02'1101	05'1204	
Y	6620780745					2	05'1205	06'0228	
	[08] 1170780581	*HOSE-MOLDED*				1	02'1101	06'0228	
	[09] 1162760929	*CONNECTOR*				1	02'1101	06'0228	
	[10] 0000780856	*FILTER-CHOKE*				1	02'1101	06'0228	
	[11] 6619973152	*TUBE-VACUUM*				1	02'1101	06'0228	L=160,YELLOW
	[12] 6629973052	*TUBE-VACUUM*				1	02'1101	06'0228	L=290,RED
	[13] 6629973352	*TUBE-VACUUM*				1	02'1101	06'0228	L=230,WHITE

1625 VACUUM SYSTEM(OLD,KOREA2004)

ITC	KEY NO. PART NO	PART NAME OPTION	L/R	T/M	DRV	MODEL 662LA									EFF. DATE FROM	EFF. DATE TO	REMARK
	[14] 6629973252	*TUBE-VACUUM*				1									02'1101	06'0228	L=370,BLUE
	[15] 6629975252	*TUBE-VACUUM* KOR2004				1									02'1101	06'0228	L=150, GREEN
	[16] 6629975352	*TUBE-VACUUM* KOR2004				1									02'1101	06'0228	L=170, GREEN
	[17] 6629975452	*TUBE-VACUUM* KOR2004				1									02'1101	06'0228	L=100, RED
	[18] 6629975552	*TUBE-VACUUM* KOR2004				1									02'1101	06'0228	L=230,GREEN
	[19] 6615463330	*HOSE-INSULATING*				1									02'1101	06'0228	
	[20] 6615463730	*HOSE-INSULATING* KOR2004				1									02'1101	06'0228	
	[21] 1170780781	*HOSE-MOLDED*				1									02'1101	06'0228	

1626 VACUUM SYSTEM(OM600;KOREA2004)

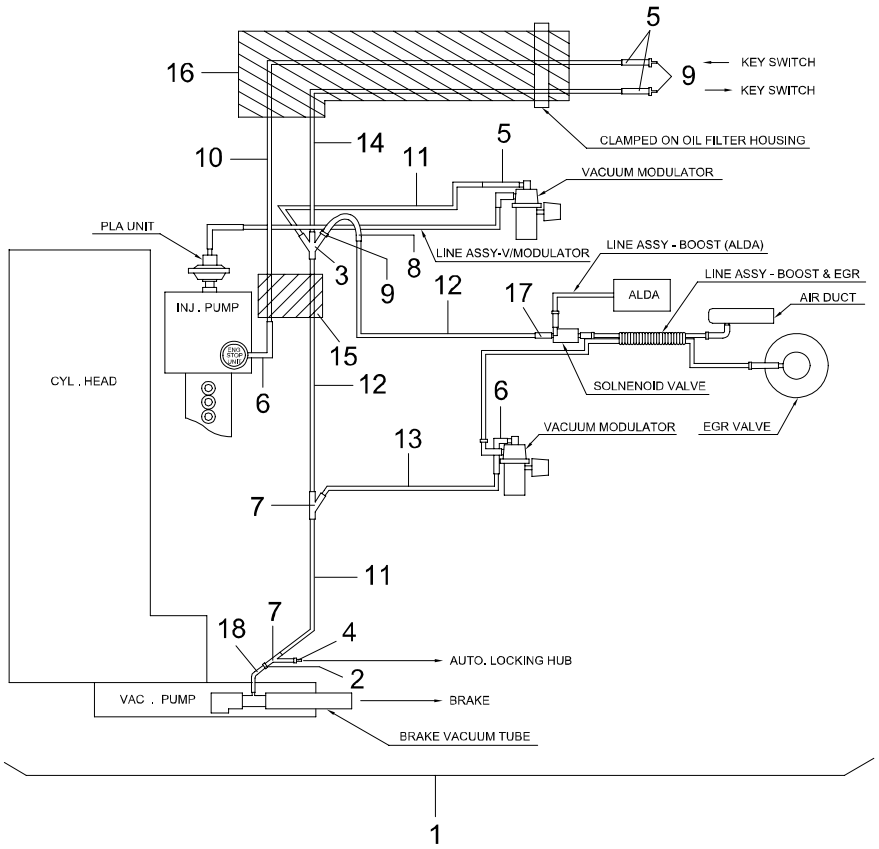

1626 VACUUM SYSTEM(OM600;KOREA2004)

ITC	KEY NO. PART NO	PART NAME OPTION	L/R	T/M	DRV	MODEL 662LA	EFF. DATE FROM	EFF. DATE TO	REMARK
	[02] 0000780456	*FILTER-AIR*				1	03'1226	06'0228	
	[03] 6010780445	*DISTRIBUTOR*				1	03'1226	05'1204	
Y	6620780845					1	05'1205	06'0228	
	[04] 1231580057	*CHOKE*				1	03'1226	06'0228	
	[05] 1179970912	*HOSE-RUBBER*				1	03'1226	06'0228	L=120
	[06] 1170780181	*HOSE-MOLDED*				2	03'1226	06'0206	
O	6620781081					2	06'0207	06'0228	
	[07] 6010780245	*DISTRIBUTOR*				2	03'1226	05'1204	
Y	6620780745					2	05'1205	06'0228	
	[08] 1170780581	*HOSE-MOLDED*				1	03'1226	06'0228	
	[09] 1162760929	*CONNECTOR*				3	03'1226	06'0228	
	[10] 6629974952	*TUBE-VACUUM*				1	03'1226	06'0228	L=240, BLUE
	[11] 6629975252	*TUBE-VACUUM*				1	03'1226	06'0228	L=150, GREEN
	[12] 6629975352	*TUBE-VACUUM*				4	03'1226	06'0228	L=170, GREEN
	[13] 6629975452	*TUBE-VACUUM*				1	03'1226	06'0228	L=100, RED
	[14] 6629975552	*TUBE-VACUUM* KOR2004				1	03'1226	06'0228	L=230, GREEN

1626 VACUUM SYSTEM(OM600;KOREA2004)

ITC	KEY NO. PART NO	PART NAME OPTION	L/R	T/M	DRV	MODEL 662LA									EFF. DATE FROM	EFF. DATE TO	REMARK
	[15] 6615463330	*HOSE-INSULATING*				1									03'1226	06'0228	L=50
	[16] 6615463730	*HOSE-INSULATING*				1									03'1226	06'0228	L=130
	[17] 6620783082	*HOSE-MOLDED*				1									03'1226	06'0228	
	[18] 1179970925	*HOSE-RUBBER*				1									03'1226	06'0228	L=250

1627 VACUUM SYSTEM

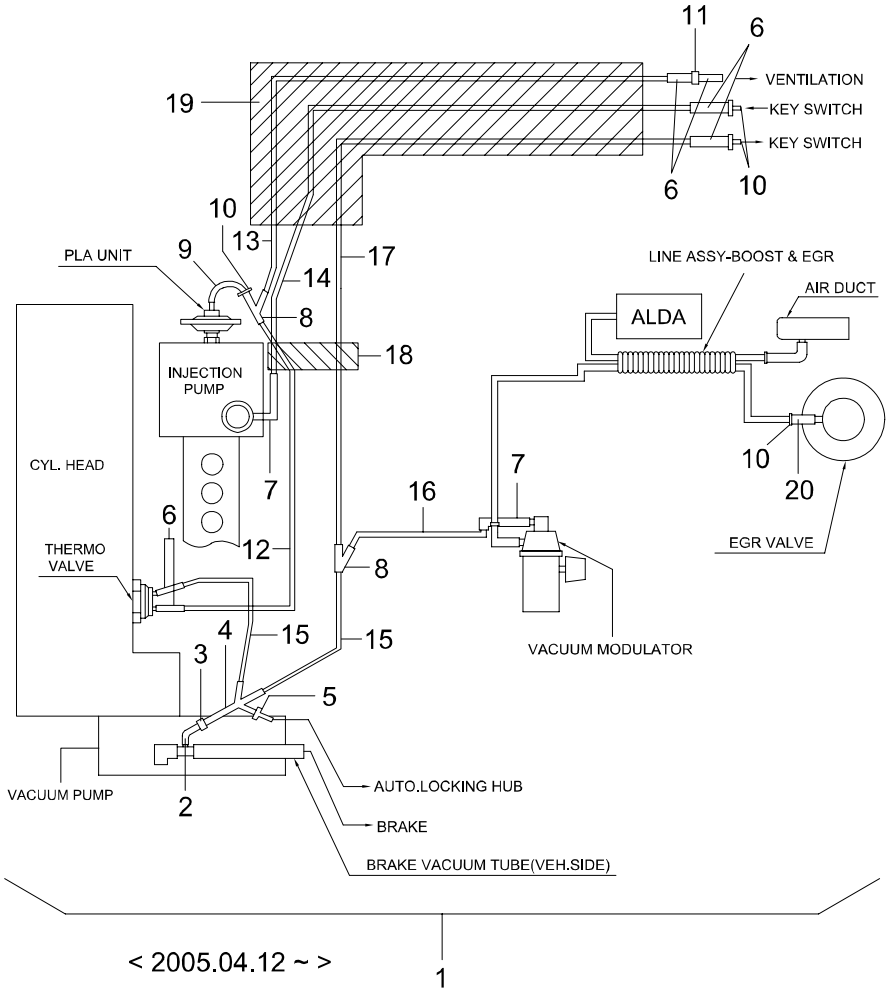

1627 VACUUM SYSTEM

ITC	KEY NO. PART NO	PART NAME OPTION	L/R	T/M	DRV	MODEL 662LA									EFF. DATE FROM	EFF. DATE TO	REMARK
	[01]	*LINE ASSY-VACUUM*															
	6620708338					1									05'0412	06'0206	
O	6620701538					1									06'0207	06'0228	
	[02]	*HOSE-RUBBER*															
	1179970982					1									05'0412	06'0228	L=250
	[03]	*FILTER-AIR*															
	0000780456					1									05'0412	06'0228	
	[04]	*DISTRIBUTOR*															
	6010780445					1									05'0412	05'1204	
Y	6620780845					1									05'1205	06'0228	
	[05]	*CHOKE-VACUUM LINE*															
	1231580057					1									05'0412	06'0228	
	[06]	*HOSE-RUBBER*															
	1179970982					6									05'0412	06'0228	L=40
	[07]	*HOSE-MOLDED*															
	1170780181					1									05'0412	06'0206	
O	6620781081					1									06'0207	06'0228	
	[08]	*DISTRIBUTOR*															
	6010780245					2									05'0412	05'1204	
Y	6620780745					2									05'1205	06'0228	
	[09]	*HOSE-MOLDED*															
	1170780581					1									05'0412	06'0228	
	[10]	*CONNECTOR*															
	1162760929					4									05'0412	06'0228	
	[11]	*FILTER-CHOKE*															
	0000780856					1									05'0412	06'0228	
	[12]	*TUBE-VACUUM*															
	6629973052					1									05'0412	06'0228	L=290,RED
	[13]	*TUBE-VACUUM*															
	6629973352					1									05'0412	06'0228	L=230,WHITE

1627 VACUUM SYSTEM

ITC	KEY NO. PART NO	PART NAME OPTION	L/R	T/M	DRV	MODEL 662LA									EFF. DATE FROM	EFF. DATE TO	REMARK
	[14] 6629973252	*TUBE-VACUUM*				1									05'0412	06'0228	L=370,BLUE
	[15] 6629975352	*TUBE-VACUUM*				2									05'0412	06'0228	L=170,GREEN
	[16] 6629975452	*TUBE-VACUUM*				1									05'0412	06'0228	L=100,RED
	[17] 6629975652	*TUBE-VACUUM*				1									05'0412	06'0228	L=430,GREEN
	[18] 6615463330	*HOSE-INSULATING*				1									05'0412	06'0228	L=50
	[19] 6615463730	*HOSE-INSULATING*				1									05'0412	06'0228	L=170
	[20] 1170780781	*HOSE-MOLDED*				1									05'0412	06'0228	

1630 FUEL CUT VACUUM LINE

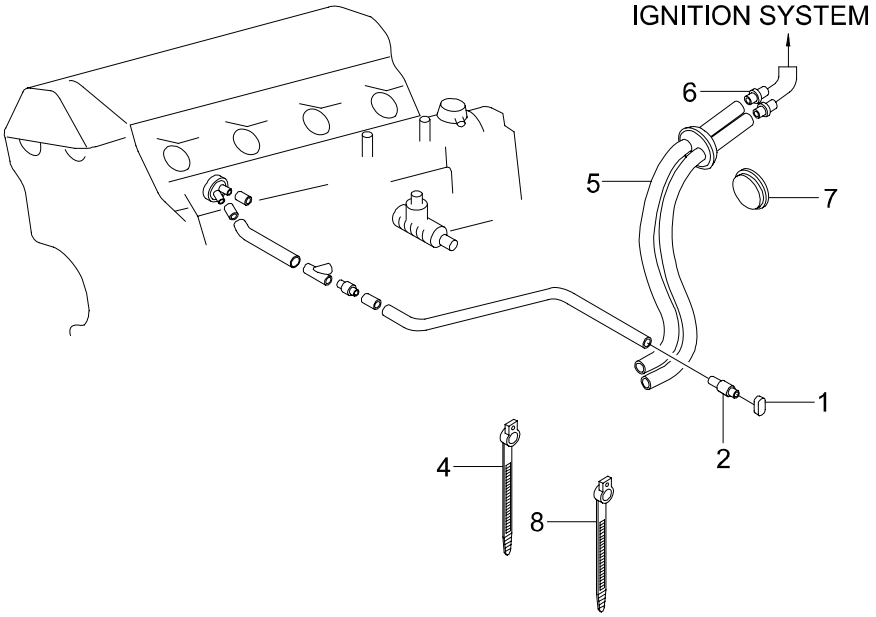

1630 FUEL CUT VACUUM LINE

ITC	KEY NO. PART NO	PART NAME OPTION	L/R	T/M	DRV	MODEL 662LA	EFF. DATE FROM	EFF. DATE TO	REMARK
	[01] 1851005000	*FILTER-VACUUM*				1	02'1201	06'0228	
	[02] 4154303010	*CONNECTOR*				1	02'1201	06'0228	I TYPE
	[04] 8295205000	*BAND*				2	02'1201	06'0228	
	[05] 4150205002	*HOSE ASSY-FUEL CUT VACUUM*				1	02'1201	06'0228	
	[06] 8631405000	*SOCKET-T/GATE WASHER HOSE*				2	02'1201	06'0228	NOT AVAILABLE:REPLACED BY 7857005000
	[07] 9514025100	*PLUG-BLIND*				1	02'1201	06'0228	M25X1.0T
	[08] 8295205020	*BAND*				2	02'1201	06'0228	

1711 INTAKE MANIFOLD(OM662LA)

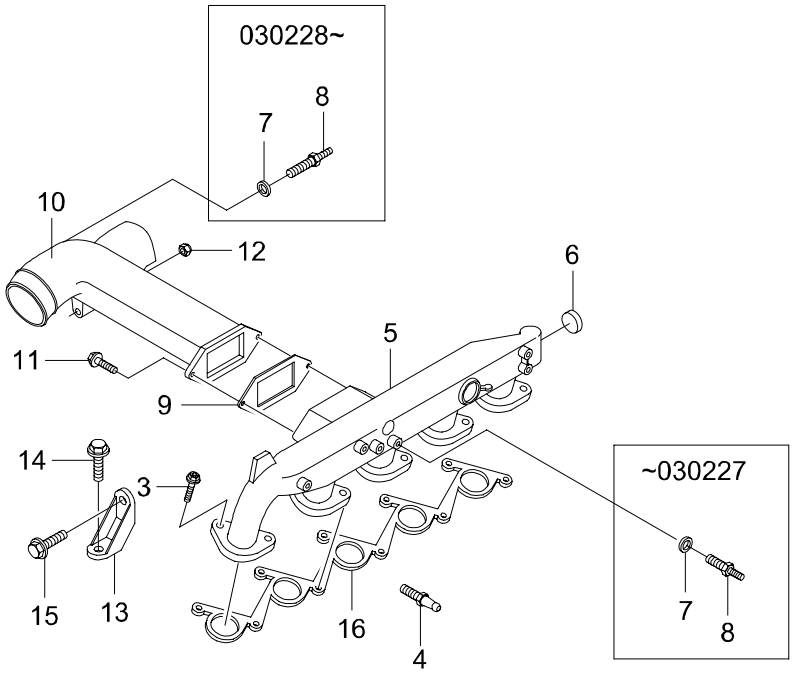

1711 INTAKE MANIFOLD(OM662LA)

ITC	KEY NO. PART NO	PART NAME OPTION	L/R	T/M	DRV	MODEL 662LA	EFF. DATE FROM	EFF. DATE TO	REMARK
	[03] 914020008004	*BOLT*				10	02'1101	06'0228	M8X30
	[04] 6619913115	*PIVOT-BALL*				1	02'0201	06'0228	
	[05] 6621405101	*MANIFOLD ASSY-INTAKE*				1	02'1101	03'0227	
N	6621405701	KOR2004				1	03'0228	06'0228	
	[06] 000443034002	*PLUG-EXPANSION*				1	02'1101	06'0228	
	[07] 007603008109	*RING-SEAL*				1	02'1101	06'0228	
	[08] 6030980304	*CONNECTOR*				1	02'1101	06'0228	
	[09] 6020960080	*GASKET-INTAKE DUCT*				1	02'1101	06'0228	
	[10] 6620984607	*DUCT-INTAKE*				1	02'1101	03'0227	
N	6620984507	KOR2004				1	03'0228	06'0228	
	[11] 914002006006	*BOLT*				2	02'1101	06'0228	M6X30
	[12] 913017008000	*NUT*				1	02'1101	06'0228	M8
	[13] 6610983039	*BRKT-INTAKE DUCT*				1	02'1101	06'0228	
	[14] 914007006007	*BOLT*				3	02'1101	06'0228	M6X16
	[15] 914007008029	*BOLT*				1	02'1101	06'0228	M8X40
	[16] 6021410280	*GASKET-INTAKE MANIFOLD*				1	02'1101	06'0228	

1721 EXHAUST MANIFOLD(OM662LA)

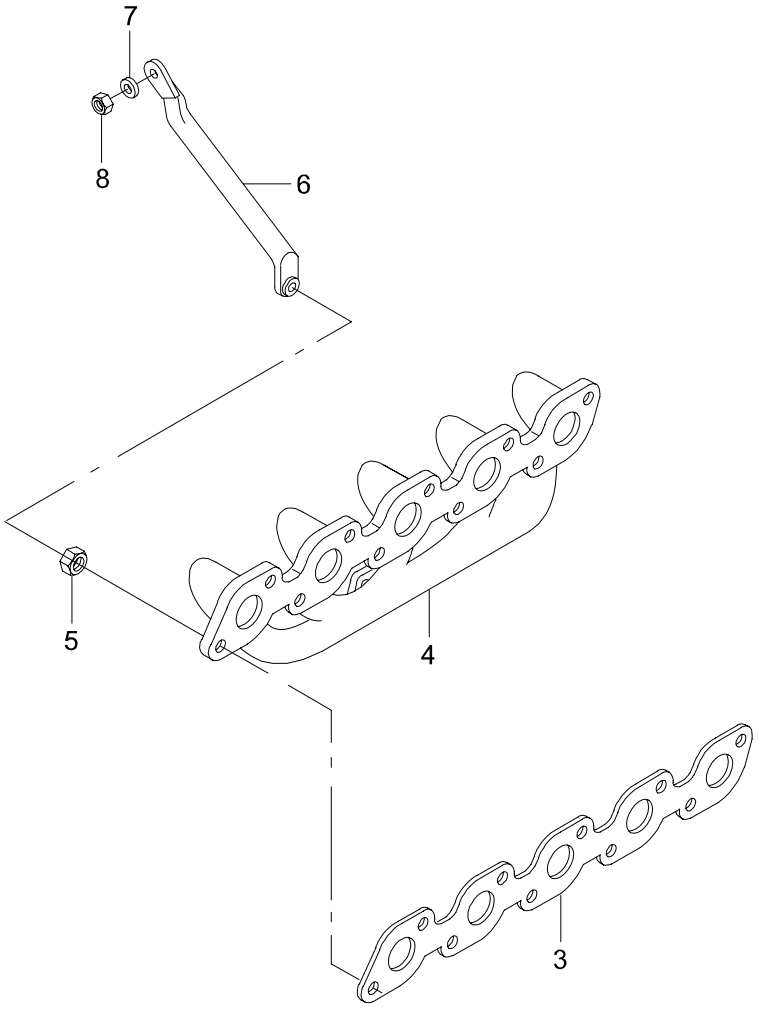

1721 - 01

1721 EXHAUST MANIFOLD(OM662LA)

ITC	KEY NO. PART NO	PART NAME OPTION	L/R	T/M	DRV	MODEL 662LA	EFF. DATE FROM	EFF. DATE TO	REMARK
	[03] 6021420080	*GASKET-EXHAUST MANIFOLD*				1	02'1101	06'0228	
	[04] 6021422901	*MANIFOLD ASSY-EXHAUST* EGR				1	02'1101	06'0228	
	[05] 1201420072	*NUT*				10	02'1101	06'0228	M8
	[06] 6621403042	*SUPT ASSY-BAR*				1	02'1101	06'0228	
	[07] 6039900840	*WASHER*				1	02'1101	06'0228	
	[08] 6039900951	*NUT*				1	02'1101	06'0228	

1790 E.G.R VALVE(OM600)

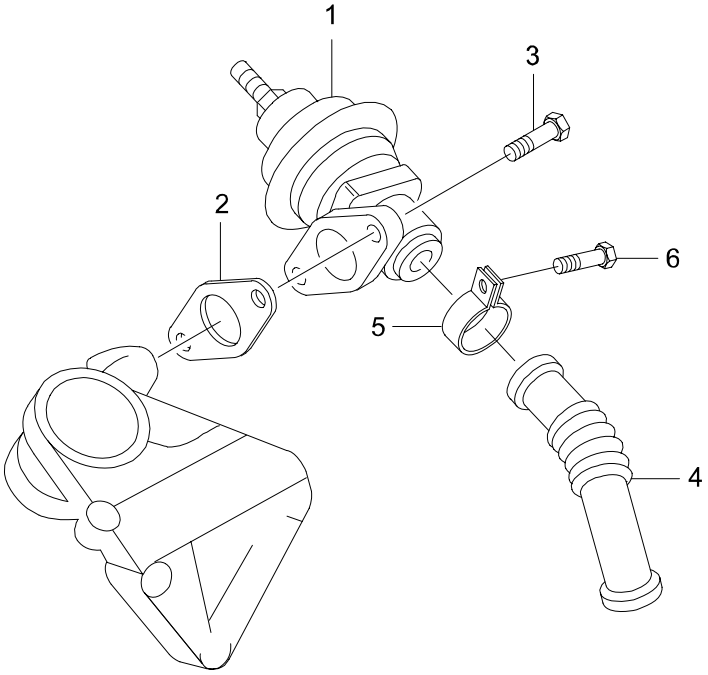

1790 E.G.R VALVE(OM600)

ITC	KEY NO. PART NO	PART NAME OPTION	L/R	T/M	DRV	MODEL 662LA									EFF. DATE FROM	EFF. DATE TO	REMARK
	[01]	*VALVE ASSY-EGR*															
	6611403460	KOR2004,EURO III				1									02'1101	06'0228	
	[02]	*GASKET-EGR VALVE*															
	6041420580					1									02'1101	03'0608	
O	6621423080					1									03'0609	06'0228	
	[03]	*BOLT*															
	000912008200					2									02'1101	02'1127	M8X20
Y	000912008009					2									02'1101	06'0228	M8X20
	[04]	*PIPE-EGR*															
	6621423164					1									02'1101	06'0228	
	[05]	*CLAMP*															
	6619953065					2									02'1101	06'0228	
	[06]	*BOLT*															
	000933006089					2									02'1101	06'0228	M6X25

1810 INJECTION PUMP(OM600)

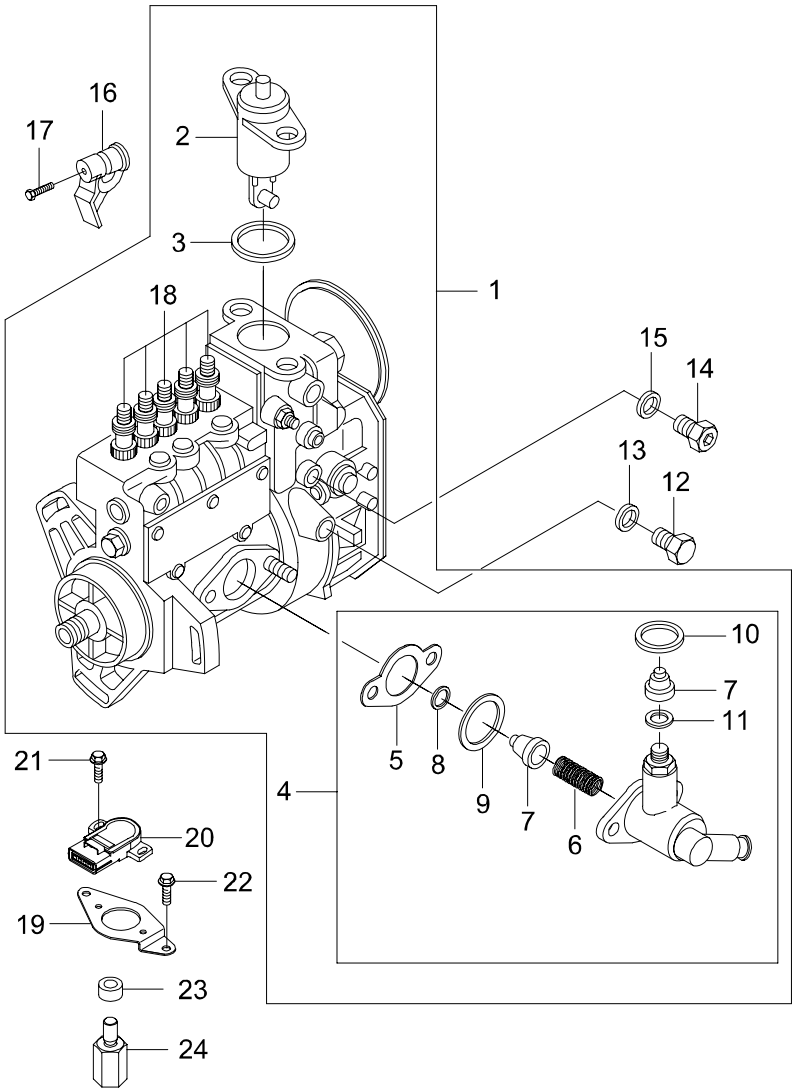

1810 INJECTION PUMP(OM600)

ITC	KEY NO. PART NO	PART NAME OPTION	L/R	T/M	DRV	MODEL 662LA									EFF. DATE FROM	EFF. DATE TO	REMARK
	[01] 6620707001	*PUMP ASSY-INJECTION*				1									02'1101	06'0228	
	[02] 0000704653	*BOX ASSY-VACUUM ENG STOP*				1									02'1101	06'0228	
	[03] 0109975648	*RING-O*				1									02'1101	06'0228	
	[04] 0000902650	*PUMP ASSY-FUEL*				1									02'1101	06'0228	
	[05] 0000911780	*GASKET-FUEL PUMP*				1									02'1101	06'0228	
	[06] 0000911019	*SPRING-VALVE*				1									02'1101	06'0228	
	[07] 0000911310	*VALVE*				1									02'1101	06'0228	
	[08] 0129972948	*RING-SEAL*				1									02'1101	06'0228	
	[09] 0129972848	*RING-SEAL*				1									02'1101	06'0228	
	[10] 0059974745	*RING-SEAL*				1									02'1101	06'0228	
	[11] 0139977748	*RING-SEAL*				1									02'1101	06'0228	
	[12] 007604018101	*BOLT*				1									02'1101	06'0228	
	6629973072					1									02'1101	06'0228	
	[13] 007603018100	*RING-SEAL*				1									02'1101	06'0228	A18X22
	[14] 000908012003	*PLUG ASSY*				1									02'1101	06'0228	

1810 INJECTION PUMP(OM600)

ITC	KEY NO. PART NO	PART NAME OPTION	L/R	T/M	DRV	MODEL 662LA									EFF. DATE FROM	EFF. DATE TO	REMARK
	[15] 007603012113	*RING-SEAL*				1									02'1101	06'0228	A12X17
	[16] 6010740012	*CAM-INJECTION*		A		1									02'1101	06'0228	
	[17] 914126005015	*BOLT*		A		1									02'1101	06'0228	M5X22
	[18] 1418502217	*VALVE-DELIVERY*				5									02'1101	06'0228	
	[19] 6610703361	*BRKT-POTENTIOMETER*				1									02'1101	06'0228	
	[20] 6615424025	*POTENTIOMETER*				1									02'1101	04'0114	
O	6615424125			A		1									04'0115	06'0228	
	[21] 914001005004	*BOLT*				2									02'1101	06'0228	M5X16
	[22] 914007006012	*BOLT*				2									02'1101	06'0228	M6X12
	[23] 6610743169	*CONNECTOR-POTENTIOMETER* KOR2004, EURO III				1									03'1226	06'0228	
	[24] 6010740069	*CONNECTOR* KOR2004, EURO III				2									03'1226	06'0228	

1820 INJECTION TIMER(OM600)

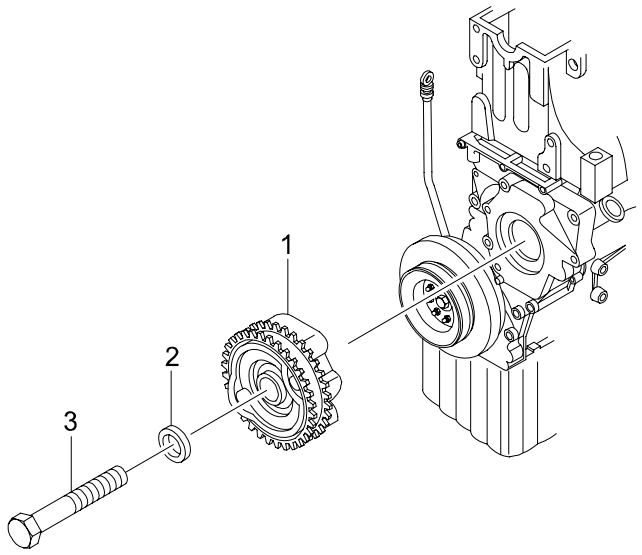

1820 INJECTION TIMER(OM600)

ITC	KEY NO. PART NO	PART NAME OPTION	L/R	T/M	DRV	MODEL 662LA									EFF. DATE FROM	EFF. DATE TO	REMARK
	[01] 6610703145	*TIMER ASSY-INJECTION*				1									02'1101	06'0228	
	[02] 6019902540	*WASHER ASSY*				1									02'1101	06'0228	
	[03] 6019900401	*BOLT*				1									02'1101	06'0228	

1830 INJECTION PIPE BRACKET & NOZZLE(OM600)

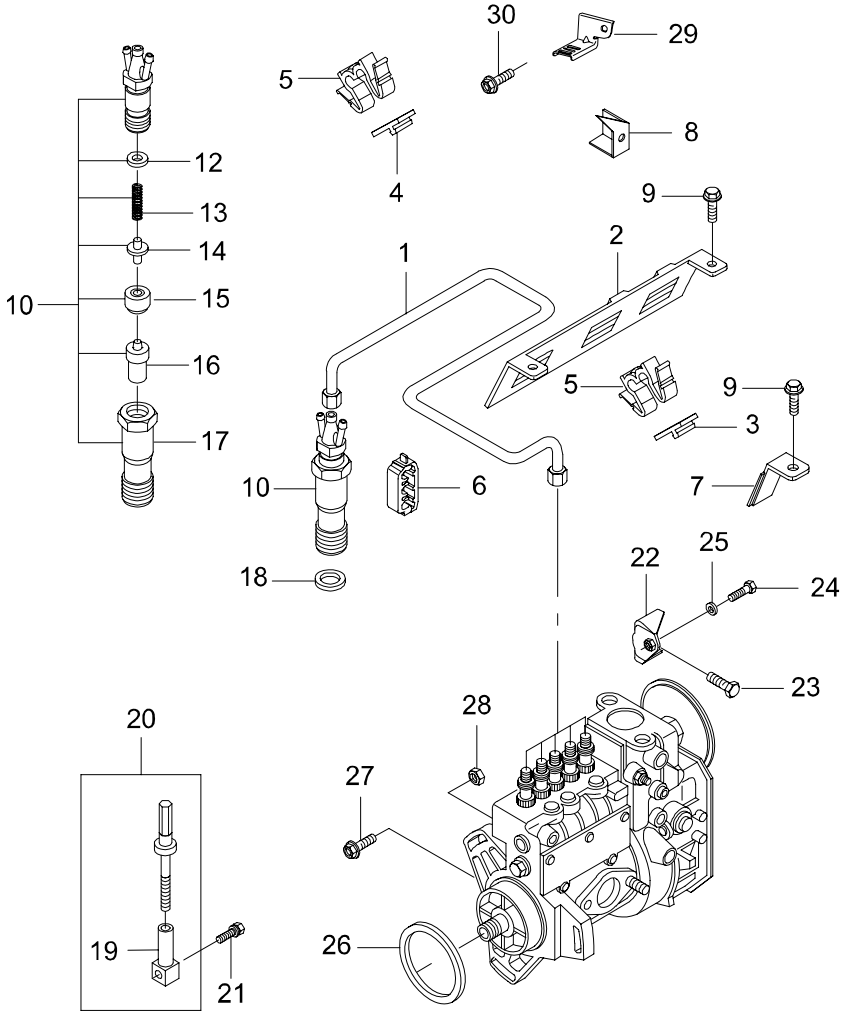

1830 INJECTION PIPE BRACKET & NOZZLE(OM600)

ITC	KEY NO. PART NO	PART NAME OPTION	L/R	T/M	DRV	MODEL 662LA									EFF. DATE FROM	EFF. DATE TO	REMARK
	[01]	*PIPE ASSY-INJECTION*															
	6010703733					1									02'1101	06'0228	CYL NO1
	6010703833					1									02'1101	06'0228	CYL NO2
	6010703933					1									02'1101	06'0228	CYL NO3
	6010704033					1									02'1101	06'0228	CYL NO4
	6020700333					1									02'1101	06'0228	CYL NO5
	[02]	*BRKT-INJECTION PIPE*															
	6010781941					1									02'1101	06'0228	
	[03]	*SUPT-RUBBER*															
	6010780386					1									02'1101	06'0228	
	[04]	*SUPT-RUBBER*															
	6010780486					2									02'1101	06'0228	
	[05]	*BRKT-INJECTION PIPE*															
	6030780141					4									02'1101	06'0228	
	6010782041					2									02'1101	06'0228	
	[06]	*BRKT-INJECTION PIPE*															
	6010782841					2									02'1101	06'0228	
	6010782641					1									02'1101	06'0228	
	[07]	*BRKT-INJECTION PIPE*															
	6620783141					1									02'1101	06'0228	CYL NO4
	[08]	*BRKT-INJECTION PIPE*															
	6010781841					2									02'1101	06'0228	
	[09]	*BOLT*															
	914005006020					2									02'1101	06'0228	M6X16
	[10]	*HOLDER ASSY-NOZZLE*															
	6610173621					5									02'1101	06'0228	
	[12]	*WASHER*															
	0010174252					1									02'1101	05'0508	R/SIZE 0.80MM
Y	0030172452					1									05'0509	06'0228	R/SIZE 0.80MM
	0010174352					1									02'1101	06'0228	R/SIZE 0.84MM
	0010174452					1									02'1101	06'0228	R/SIZE 0.88MM
	0010174552					1									02'1101	06'0228	R/SIZE 0.90MM
	0010174652					1									02'1101	06'0228	R/SIZE 0.94MM
	0010174752					1									02'1101	06'0228	R/SIZE 0.98MM

1830 INJECTION PIPE BRACKET & NOZZLE(OM600)

ITC	KEY NO. PART NO	PART NAME OPTION	L/R	T/M	DRV	MODEL 662LA									EFF. DATE FROM	EFF. DATE TO	REMARK
	[12]	*WASHER*															
	0000173652					1									02'1101	06'0228	R/SIZE 1.00MM
	0000173752					1									02'1101	05'0322	R/SIZE 1.04MM
Y	0030174852					1									05'0323	06'0228	R/SIZE 1.04MM
	0010174852					1									02'1101	05'0110	R/SIZE 1.08MM
Y	0030175252					1									05'0111	06'0228	R/SIZE 1.08MM
	0000173852					1									02'1101	06'0228	R/SIZE 1.10MM
	0000173952					1									02'1101	06'0228	R/SIZE 1.14MM
	0010174952					1									02'1101	06'0228	R/SIZE 1.18MM
	0000174052					1									02'1101	06'0228	R/SIZE 1.20MM
	0000174152					1									02'1101	06'0228	R/SIZE 1.24MM
	0010175052					1									02'1101	05'0110	R/SIZE 1.28MM
Y	0030177252					1									05'0111	06'0228	R/SIZE 1.28MM
	0000174252					1									02'1101	06'0228	R/SIZE 1.30MM
	0000174352					1									02'1101	06'0228	R/SIZE 1.34MM
	0010175152					1									02'1101	06'0228	R/SIZE 1.38MM
	0000174452					1									02'1101	06'0228	R/SIZE 1.40MM
	0000174552					1									02'1101	06'0228	R/SIZE 1.44MM
	0010175252					1									02'1101	06'0228	R/SIZE 1.48MM
	0000174652					1									02'1101	06'0228	R/SIZE 1.50MM
	0000174752					1									02'1101	05'0322	R/SIZE 1.54MM
Y	0030179852					1									05'0323	06'0228	R/SIZE 1.54MM
	0010175352					1									02'1101	06'0228	R/SIZE 1.58MM
	0000174852					1									02'1101	04'0908	R/SIZE 1.60MM
Y	0040170452					1									04'0909	06'0228	R/SIZE 1.60MM
	0000174952					1									02'1101	05'0322	R/SIZE 1.64MM
Y	0040170852					1									05'0323	06'0228	R/SIZE 1.64MM
	0010175452					1									02'1101	06'0228	R/SIZE 1.68MM
	0000175052					1									02'1101	05'0405	R/SIZE 1.70MM
Y	0040171452					1									05'0406	06'0228	R/SIZE 1.70MM
	0000175152					1									02'1101	06'0228	R/SIZE 1.74MM
	0010175552					1									02'1101	06'0228	R/SIZE 1.78MM
	0000175252					1									02'1101	06'0228	R/SIZE 1.80MM
	0000175352					1									02'1101	06'0228	R/SIZE 1.84MM
	0010175652					1									02'1101	06'0228	R/SIZE 1.88MM
	0000175452					1									02'1101	06'0228	R/SIZE 1.90MM
	0000175552					1									02'1101	06'0228	R/SIZE 1.94MM
	0010175752					1									02'1101	06'0228	R/SIZE 1.98MM
	[13]	*SPRING-PRESSURE*															
	0000171317					5									02'1101	06'0228	

1830 INJECTION PIPE BRACKET & NOZZLE(OM600)

ITC	KEY NO. PART NO	PART NAME OPTION	L/R	T/M	DRV	MODEL 662LA									EFF. DATE FROM	EFF. DATE TO	REMARK
	[14] 0000171374	*PIN-PRESSURE SPINDLE*				5									02'1101	06'0228	
	[15] 0010175952	*WASHER-SPACER*				5									02'1101	06'0228	
	[16] 0020172912	*NOZZLE ASSY*				5									02'1101	06'0228	
	[17] 0000172916	*NUT*				5									02'1101	06'0228	
	[18] 6010170060	*GASKET-NOZZLE HOLDER*				5									02'1101	06'0228	
	[19] 6010740632	*SLEEVE-THREADED*				1									02'1101	06'0228	
	[20] 6010740228	*BOLT*				1									02'1101	06'0228	WITH BOLT&SLEEVE
	[21] 914005006009	*BOLT*				1									02'1101	06'0228	M6X25
	[22] 6610703061	*BRKT ASSY-INJECTION PUMP*				1									02'1101	06'0228	
	[23] 914005006020	*BOLT*				2									02'1101	06'0228	M6X16
	[24] 914007008010	*BOLT*				1									02'1101	06'0228	M8X30
	[25] 6039900840	*WASHER*				1									02'1101	06'0228	
	[26] 0129978348	*RING-O*				1									02'1101	06'0228	
	[27] 914010008039	*BOLT*				3									02'1101	06'0228	M8X130
	[28] 6019900052	*NUT*				3									02'1101	06'0228	

1830 INJECTION PIPE BRACKET & NOZZLE(OM600)

ITC	KEY NO. PART NO	PART NAME OPTION	L/R	T/M	DRV	MODEL 662LA									EFF. DATE FROM	EFF. DATE TO	REMARK
	[29]	*BRKT-INJECTION PIPE*															
	6620783141					1									02'1101	06'0228	CYL NO4
	6620783241					1									02'1101	06'0228	CYL NO5
	[30]	*BOLT*															
	914005006002					1									02'1101	06'0228	M6X12

1840 INJECTION CONTROL SYSTEM(OM600;M/T,BTRA A/T)

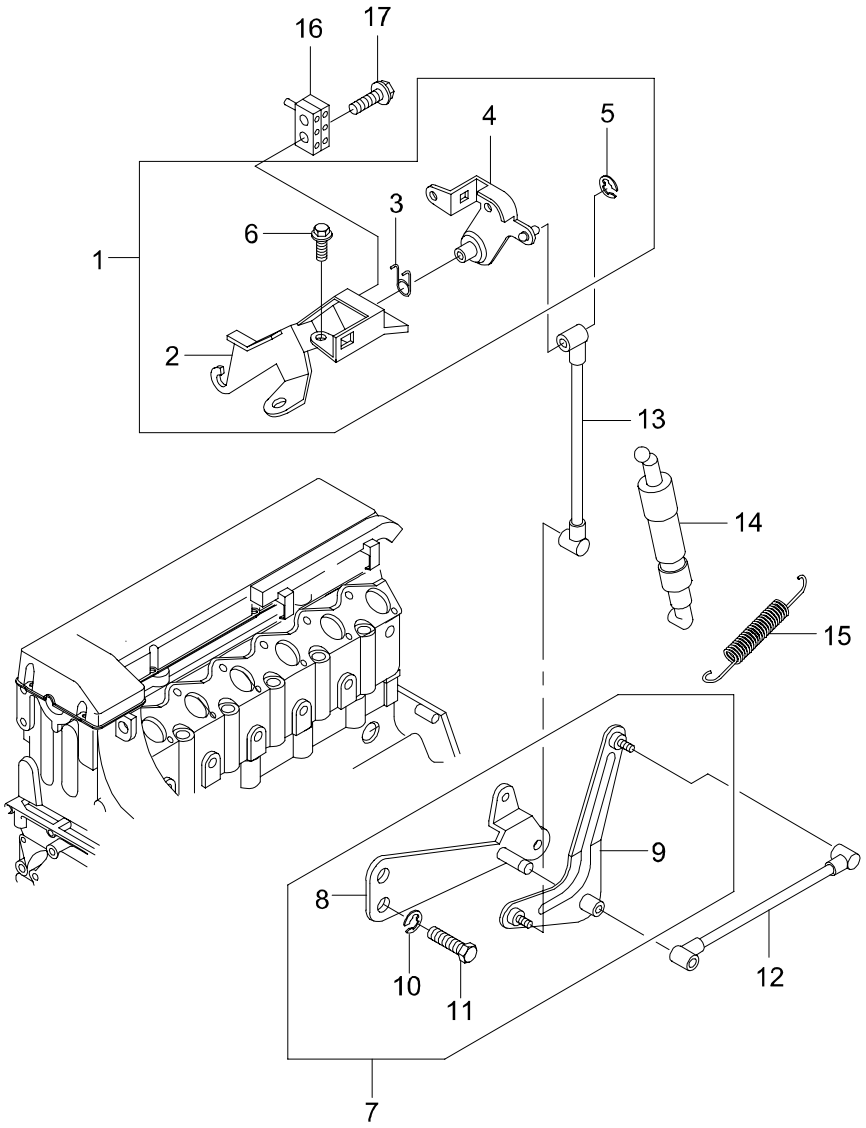

1840 INJECTION CONTROL SYSTEM(OM600;M/T,BTRA A/T)

ITC	KEY NO. PART NO	PART NAME OPTION	L/R	T/M	DRV	MODEL 662LA									EFF. DATE FROM	EFF. DATE TO	REMARK
	[01]	*BRKT ASSY-BEARING*															
	6610704424					1									02'1101	03'0102	
Y	6620704024					1									03'0103	03'0411	
N	6620704124					1									03'0412	06'0228	
	[02]	*BRKT ASSY-BEARING*															
	6610703624					1									02'1101	06'0228	
	[03]	*SPRING-TORSION*															
	6619933220					1									02'1101	06'0228	
	[04]	*LEVER ASSY-CONTROL*															
	6610703221					1									02'1101	03'0102	
Y	6620703321					1									03'0103	05'1231	
	[05]	*RING-SNAP*															
	006799005009					2									02'1101	06'0228	
	[06]	*BOLT*															
	914005006020					1									02'1101	06'0228	M6X16
	914007006007					1									02'1101	06'0228	M6X16
	[07]	*BRKT ASSY-BEARING*															
	6610704124					1									02'1101	06'0228	
	[08]	*BRKT ASSY-BEARING*															
	6010700124					1									02'1101	06'0228	
	[09]	*LEVER ASSY-ANGULAR*															
	6610703522					1									02'1101	06'0228	
	[10]	*RING-SNAP*															
	006799005009					1									02'1101	06'0228	
	[11]	*BOLT*															
	000933006016					1									02'1101	06'0228	M6X12
	914005006020					1									02'1101	06'0228	M6X16
	[12]	*ROD ASSY-CONNECTING*															
	6620703275					1									02'1101	06'0228	
	[13]	*ROD ASSY-CONNECTING*															
	0000707375					1									02'1101	06'0228	

1840 INJECTION CONTROL SYSTEM(OM600;M/T,BTRA A/T)

ITC	KEY NO. PART NO	PART NAME OPTION	L/R	T/M	DRV	MODEL 662LA									EFF. DATE FROM	EFF. DATE TO	REMARK
	[14] 6010701367	*DAMPER ASSY-INJECTION*				1									02'1101	06'0228	
	[15] 6629933010	*SPRING-RETURN*				1									02'1101	06'0228	
	[16] 6625453114	*SWITCH ASSY-MICRO*				1									02'1101	06'0228	
	[17] 000933004046	*BOLT*				2									02'1101	06'0228	M4X28

1911 TURBOCHARGER(OM662LA)

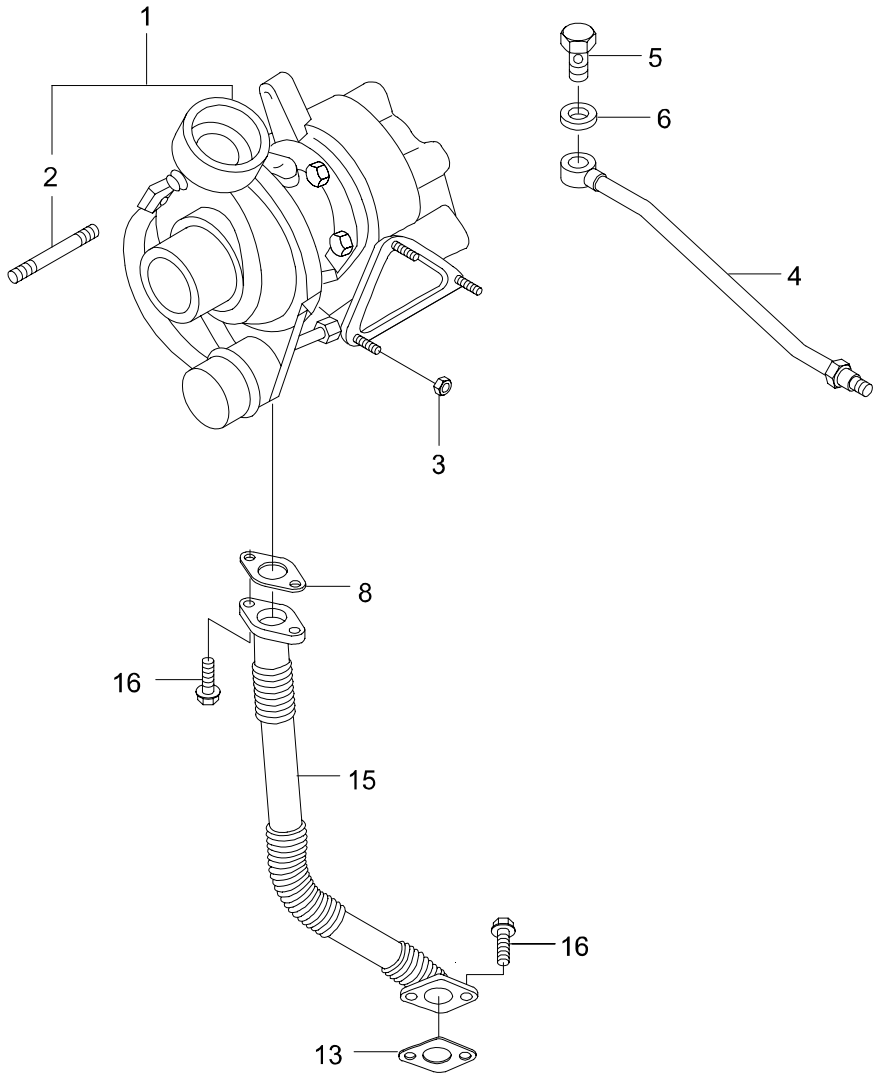

1911 - 01

1911 TURBOCHARGER(OM662LA)

ITC	KEY NO. PART NO	PART NAME OPTION	L/R	T/M	DRV	MODEL 662LA									EFF. DATE FROM	EFF. DATE TO	REMARK
	[01]	*TURBOCHARGER ASSY*															
	6620903080					1									02'1101	06'0228	
	6620903680	EU III				1									04'0224	06'0228	
	[02]	*BOLT*															
	6039900605					3									02'1101	06'0228	TO EXH MANIFOLD
	6039900405					2									02'1101	06'0228	TO EXHAUST PIPE
	[03]	*NUT*															
	6039900951					3									02'1101	06'0228	
	[04]	*TUBE ASSY-OIL SUPPLY*															
	6021802320					1									02'1101	06'0228	
	6621803820	EURO3				1									04'0224	06'0228	
	[05]	*BOLT*															
	915036008104					1									02'1101	06'0228	
	6619973572	EURO3				1									04'0224	06'0228	
	[06]	*RING-SEAL*															
	007603012110					2									02'1101	06'0228	A12X17
	007603010103	EURO3				2									04'0224	06'0228	
	[08]	*GASKET-OIL RETURN TUBE*															
	6021870480					1									02'1101	06'0228	
	6651870080	EURO3				1									04'0224	06'0228	
	[13]	*GASKET-OIL STRAINER*															
	6611863080					1									02'1101	04'0517	
Y	6621863080					1									04'0518	06'0228	
	[15]	*TUBE ASSY-OIL RETURN*															
	6621803720					1									02'1101	06'0228	
	6611804120	EURO3				1									04'0224	06'0228	
	[16]	*BOLT*															
	914020006013					4									02'1101	06'0228	M6X16

1990 ENGINE MOUNTING

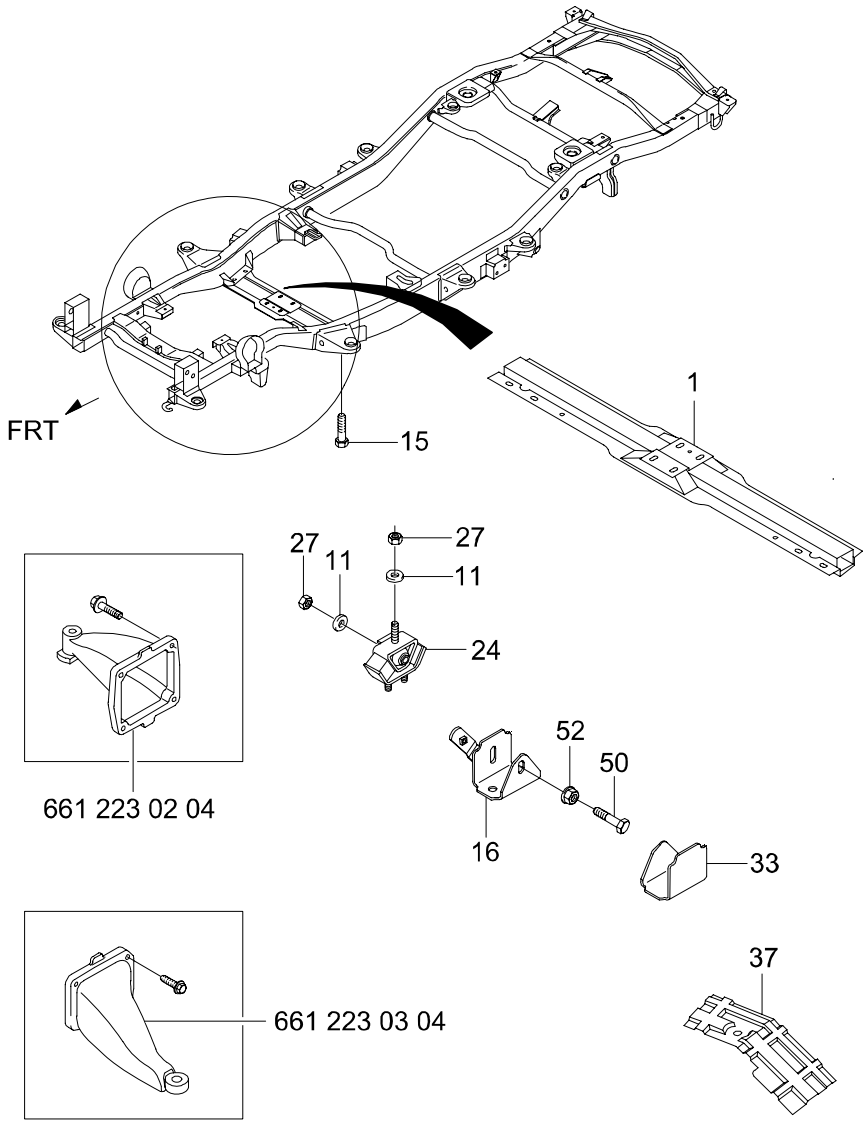

1990 ENGINE MOUNTING

ITC	KEY NO. PART NO	PART NAME OPTION	L/R	T/M	DRV	MODEL 662LA	EFF. DATE FROM	EFF. DATE TO	REMARK
	[01]	*MEMBER ASSY-ENGINE MTG RR CROSS*							
	4028008000					1	02'1201	06'0228	EXTRA BRKT LH:4023005200,RH:4023505200
Y	4028008001					1	03'0421	06'0228	EXTRA BRKT LH:4023005200,RH:4023505200
	[11]	*WASHER*							
	934141200D					4	02'1201	06'0228	M12
	[15]	*BOLT*							
	959371030D					8	02'1201	06'0228	M10X1.25X30
	[16]	*STOPPER ASSY-ENGINE MTG*							
	2092005002		LH			1	02'1201	06'0228	
	[24]	*INSULATOR-ENGINE MTG FRT*							
	2091105021					2	02'1201	06'0228	
	[27]	*NUT*							
	920361200D					4	02'1201	06'0228	M12X1.25
	[33]	*STOPPER ASSY-ENGINE MTG*							
	2092105000					1	02'1201	06'0228	
	[37]	*SHIELD-INSULATOR HEAT*							
	2095105100					1	02'1201	06'0228	
	[50]	*BOLT*							
	955691095D					1	02'1201	06'0228	
	[52]	*NUT*							
	928961000D					2	02'1201	06'0228	M10X1.25

2010 ACCELERATOR CONTROL

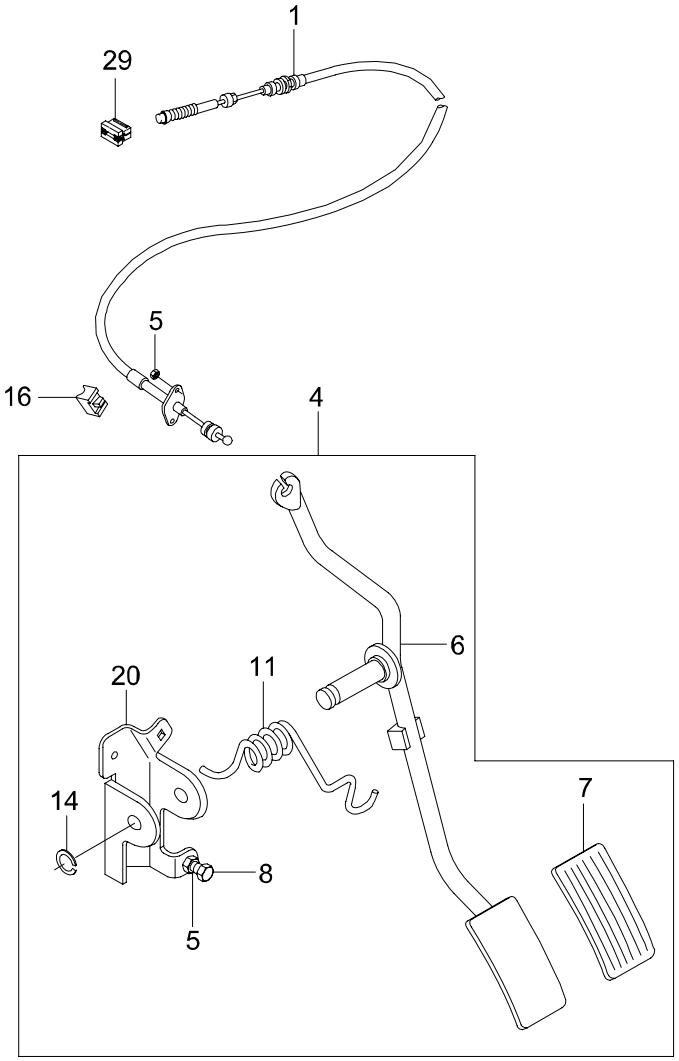

2010 ACCELERATOR CONTROL

ITC	KEY NO. PART NO	PART NAME OPTION	L/R	T/M	DRV	MODEL 662LA									EFF. DATE FROM	EFF. DATE TO	REMARK
	[01]	*CABLE ASSY-ACCEL*															
	2011005006					1									02'1201	03'0411	
N	2011005007				L	1									03'0412	04'0708	2 NUT->PLASTIC TYPE
O	2011005008					1									04'0709	06'0228	
	2011005901				R	1									02'1201	03'0411	
N	2011005902				R	1									03'0412	06'0228	
	[04]	*PEDAL ASSY-ACCEL*															
	2051005050			M		1									02'1201	06'0228	
	2051005100			A		1									02'1201	06'0228	
	2051005950				R	1									02'1201	06'0228	
	[05]	*NUT*															
	9202405001					1									02'1201	06'0228	M5X0.8
	[06]	*CRANK ASSY-BELL*															
	2052005000					1									02'1201	06'0228	NSS
	[07]	*PAD-ACCEL PEDAL*															
	2051405000					1									02'1201	06'0228	
	[08]	*BOLT*															
	9110405161					1									02'1201	06'0228	M5X0.8X16
	[11]	*SPRING*															
	2051205000					1									02'1201	06'0228	
	[14]	*RING-RETAINER*															
	9508007001					1									02'1201	06'0228	M7X0.8
	[16]	*PAD-RETURN STOP*															
	2051305000					1									02'1201	06'0228	
	[20]	*BRKT ASSY-ACCEL PEDAL MTG*															
	2053005000					1									02'1201	06'0228	
	[29]	*DAMPER ASSY-ACCEL*															
	2011605000					1									02'1201	06'0228	

2111 RADIATOR

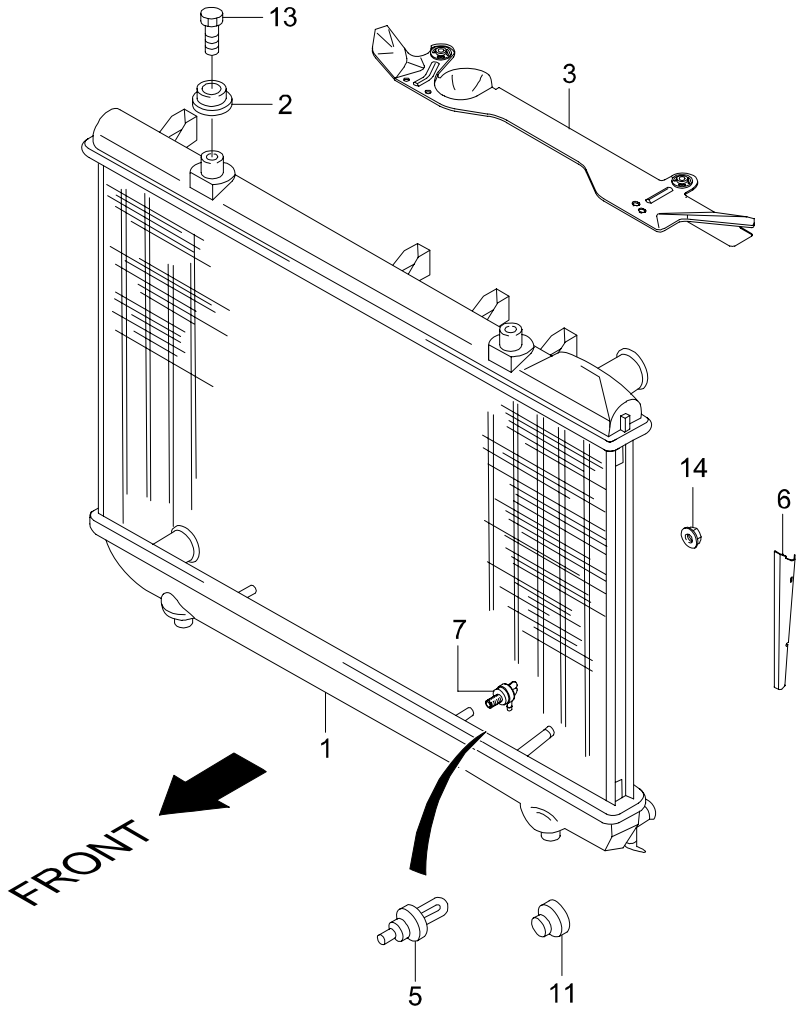

2111 RADIATOR

ITC	KEY NO. PART NO	PART NAME OPTION	L/R	T/M	DRV	MODEL 662LA									EFF. DATE FROM	EFF. DATE TO	REMARK
	[01]	*RADIATOR ASSY-COOLING*															
	2131005322X			M		1									02'1201	06'0228	
	2131005312X			A		1									02'1201	06'0228	
	2131005420	A/T,EU ONLY		A		1									03'0902	06'0228	
	2131005410					1									03'0926	06'0228	EU ONLY
	[02]	*INSULATOR-RADIATOR MTG*															
	2133005000					2									02'1201	06'0228	
	[03]	*STOPPER-RADIATOR MTG*															
	2136005322X					1									02'1201	06'0228	
	[05]	*SWITCH ASSY-THERMO*															
	2169005010					1									02'1201	06'0228	N/OPEN(BLACK)
	[06]	*PAD-RADIATOR UPR*															
	2137105320X		LH			1									02'1201	06'0228	
	2137205320X		RH			1									02'1201	06'0228	
	[07]	*PLUG-DRAIN*															
	21690050A0					1									02'1201	06'0228	
	[11]	*PLUG-RADIATOR*															
	2169005040					1									02'1201	06'0228	
	[13]	*SCREW*															
	982740620D					2									02'1201	06'0228	M6X1.0X20
	[14]	*NUT*															
	928840600D					4									02'1201	06'0228	M6X1.0

2120 COOLING FAN

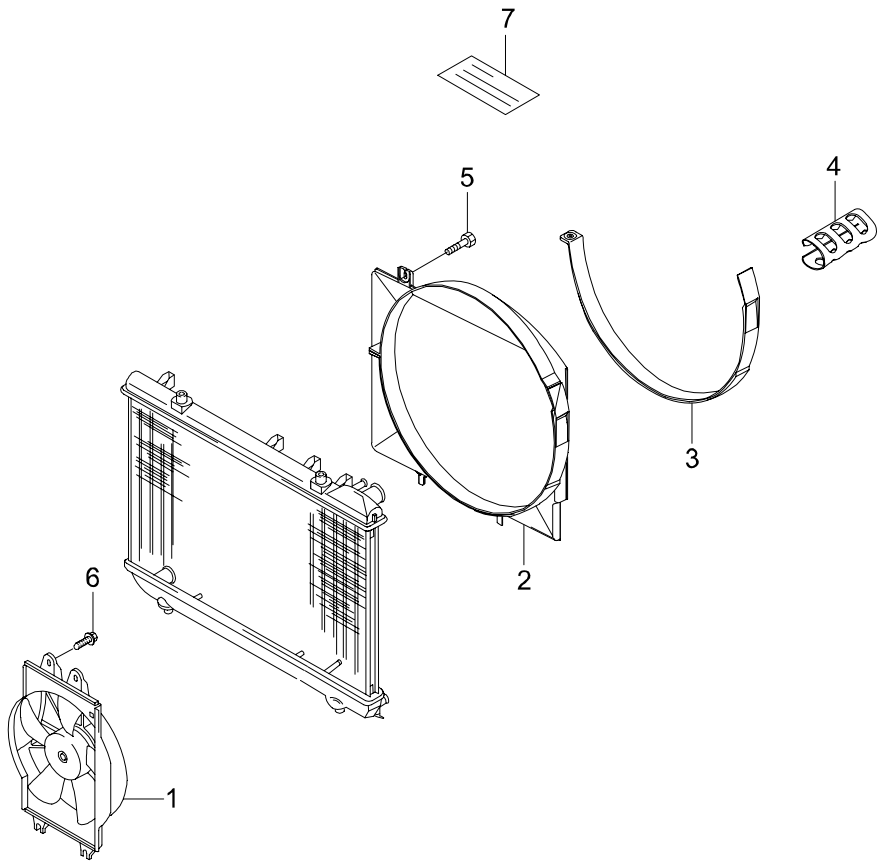

2120 COOLING FAN

ITC	KEY NO. PART NO	PART NAME OPTION	L/R	T/M	DRV	MODEL 662LA									EFF. DATE FROM	EFF. DATE TO	REMARK
	[01] 6842005411	*FAN & SHROUD ASSY*				1									02'1201	06'0228	DHC,CONNECTOR "O"TYPE
	[02] 2165105322	*SHROUD ASSY-COOLING FAN*				1									02'1201	06'0228	
	[03] 2165205322X	*COVER-FAN SHROUD*				1									02'1201	06'0228	
	[04] 2165505320	*CLIP*				1									02'1201	06'0228	
	[05] 982940616D	*SCREW*				2									02'1201	06'0228	M6X1.0X16
	[06] 916040614D	*BOLT*				4									02'1201	06'0228	
	[07] 2165908000	*LABEL-ENGINE FAN*				1									02'1201	06'0228	WARNING LABEL

2130 RADIATOR HOSE & PIPE

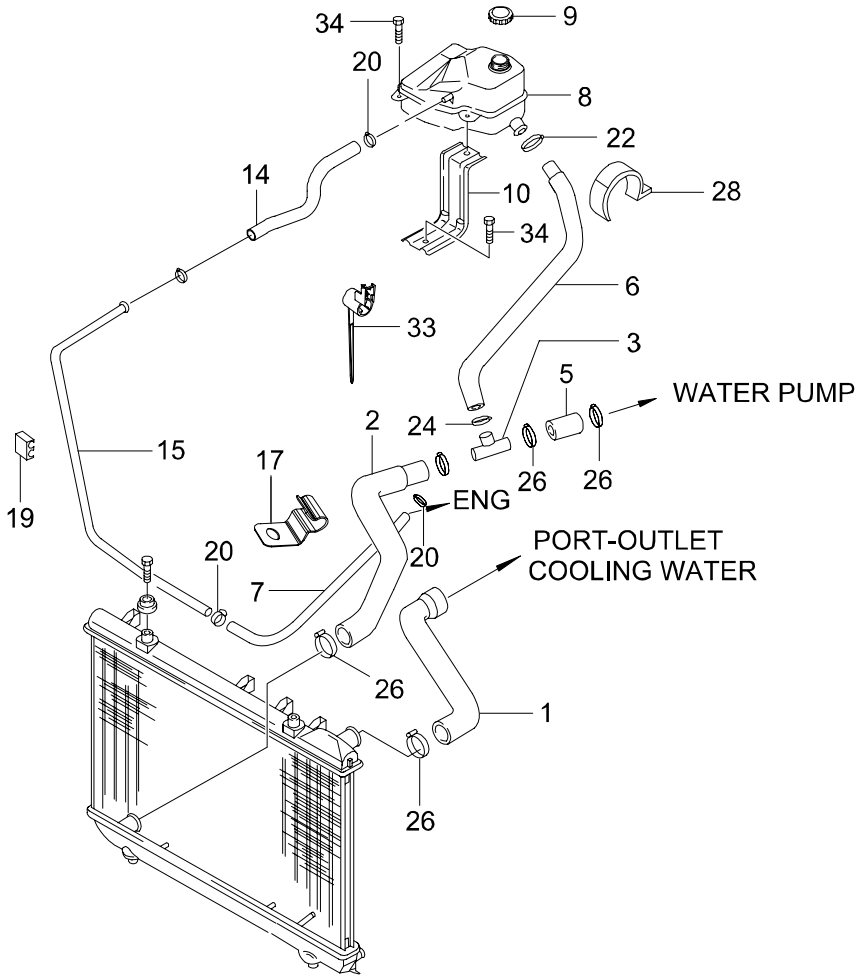

2130 RADIATOR HOSE & PIPE

ITC	KEY NO. PART NO	PART NAME OPTION	L/R	T/M	DRV	MODEL 662LA									EFF. DATE FROM	EFF. DATE TO	REMARK
	[01] 2141105320	*HOSE-RADIATOR INLET*				1									02'1201	06'0228	
	[02] 2142105050	*HOSE-RADIATOR TO CONNECTOR*				1									02'1201	06'0228	
	[03] 2142405000	*CONNECTOR*				1									02'1201	06'0228	
	[05] 2142205020	*HOSE*				1									02'1201	06'0228	
	[06] 2142305320	*HOSE-MAKE UP*				1									02'1201	06'0228	
	[07] 2143105321	*HOSE-DEAERATION*				1									02'1201	06'0228	
	[08] 2160505051	*TANK ASSY-RESERVOIR*				1									02'1201	06'0228	
	[09] 2161508050	*CAP-RADIATOR PRESSURE*				1									02'1201	06'0228	
	[10] 2164105321	*BRKT-RESERVOIR TANK MTG*				1									02'1201	06'0228	
	[14] 2143205001	*HOSE-DEAERATION*				1									02'1201	06'0228	
	[15] 2143305320	*TUBE-DEAERATION*				1									02'1201	06'0228	
	[17] 2142505000	*BRKT-HOSE CLAMP*				1									02'1201	06'0228	
	[19] 2143705321	*CLIP*				3									02'1201	06'0228	
	[20] 9465714007	*CLAMP*				4									02'1201	06'0228	M14
	[22] 9913104000	*CLAMP*				1									02'1201	06'0228	M40

2130 RADIATOR HOSE & PIPE

ITC	KEY NO. PART NO	PART NAME OPTION	L/R	T/M	DRV	MODEL 662LA									EFF. DATE FROM	EFF. DATE TO	REMARK
	[24]	*CLAMP*															
	9913103500					1									02'1201	06'0228	M35
	[26]	*CLAMP*															
	9913104600					6									02'1201	06'0228	M46
Y	2144111450					6									06'0124	06'0228	
	[28]	*HOLDER-MAKE UP HOSE*															
	2149111000					1									02'1201	06'0228	
	[33]	*BAND*															
	8295205000					1									02'1201	06'0228	
	[34]	*SCREW*															
	982740620D					1									02'1201	06'0228	M6X1.0X20

2210 FUEL TANK(DSL)

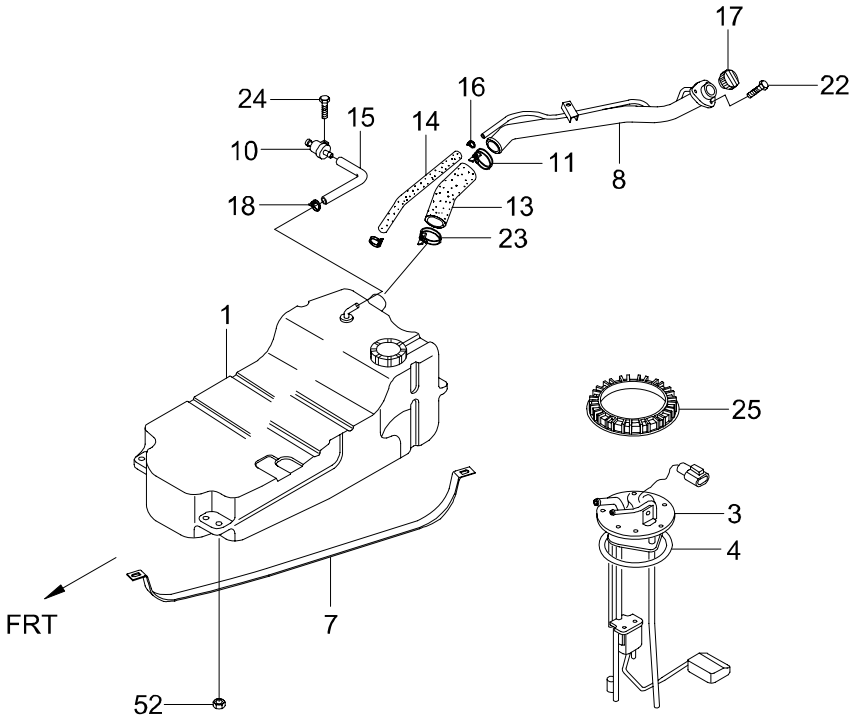

2210 FUEL TANK(DSL)

ITC	KEY NO. PART NO	PART NAME OPTION	L/R	T/M	DRV	MODEL 662LA									EFF. DATE FROM	EFF. DATE TO	REMARK
	[01]	*TANK ASSY-FUEL*															
	2211005024					1									02'1201	03'0120	PLASTICS
Y	2211005025	DSL				1									03'0121	03'0812	PLASTICS
Y	2211005026	DSL				1									03'0813	06'0228	PLASTICS
	[03]	*SENDER ASSY-FUEL TANK*															
	8131005061					1									02'1201	03'0120	
Y	8131005062	DSL				1									03'0121	03'0519	
Y	8131005070	DSL				1									03'0520	06'0228	
	[04]	*PACKING-SENDING UNIT*															
	2211505050					1									02'1201	06'0228	
	[08]	*FILLER ASSY-FUEL*															
	2261007000					1									02'1201	06'0228	
	[10]	*VALVE-2WAY CHECK*															
	2218305050					1									02'1201	06'0228	
	[11]	*CLAMP*															
	9460045001					1									02'1201	06'0228	M62
	[13]	*HOSE-FUEL FILLER*															
	2264107000					1									02'1201	06'0228	
	[14]	*HOSE ASSY-AIR VENT*															
	2267007000					1									02'1201	06'0228	L=460mm
	[15]	*HOSE-BREATHER*															
	2268105010					1									02'1201	06'0228	
	[16]	*CLAMP*															
	9460022001					1									02'1201	06'0228	M22
	[17]	*CAP-FUEL FILLER*															
	2269205010					1									02'1201	06'0228	
	[18]	*CLAMP*															
	2261501000					2									02'1201	06'0228	
	[22]	*SCREW*															
	982740616D					3									02'1201	06'0228	M6X1.0X16

2210 FUEL TANK(DSL)

ITC	KEY NO. PART NO	PART NAME OPTION	L/R	T/M	DRV	MODEL 662LA									EFF. DATE FROM	EFF. DATE TO	REMARK
	[23] 9460062000	*CLAMP*				2									02'1201	06'0228	
	[24] 958140612D	*BOLT*				4									02'1201	06'0228	M6X1.0X12
	[25] 2219205050	*CAP-TANK*				1									02'1201	06'0228	
	[52] 928961000D	*NUT*				4									02'1201	06'0228	M10X1.25

2220 FUEL LINE(DSL)

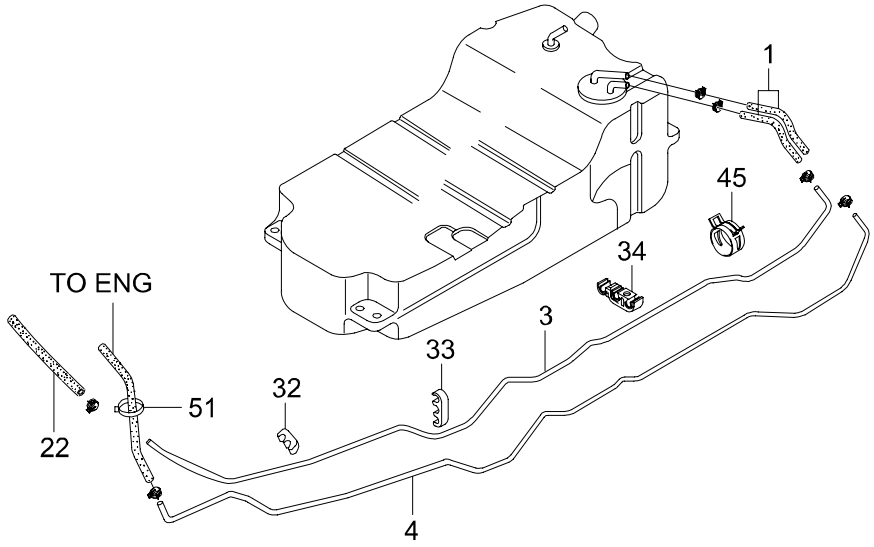

2220 FUEL LINE(DSL)

ITC	KEY NO. PART NO	PART NAME OPTION	L/R	T/M	DRV	MODEL 662LA	EFF. DATE FROM	EFF. DATE TO	REMARK
	[01] 2272105010	*HOSE ASSY-FUEL TANK & RETURN TUBE*				1	02'1201	06'0228	
	[03] 2271705012	*TUBE ASSY-SUPPLY TUBE TO FRT*				1	02'1201	06'0228	
	[04] 2271805021	*TUBE ASSY-FUEL RETURN*				1	02'1201	06'0228	
	[22] 2268105010	*HOSE-BREATHER*				1	02'1201	06'0228	
	[32] 2274105020	*CLIP*				5	02'1201	06'0228	
	[33] 2274105010	*CLIP*				2	02'1201	06'0228	
	[34] 2274105040	*CLIP*				1	02'1201	06'0228	
	[45] 2276105014	*CLAMP*				8	02'1201	06'0228	
	[51] 9456102000	*CLIP*				1	02'1201	06'0228	M2

2230 FUEL FILTER & LINE(OM600)

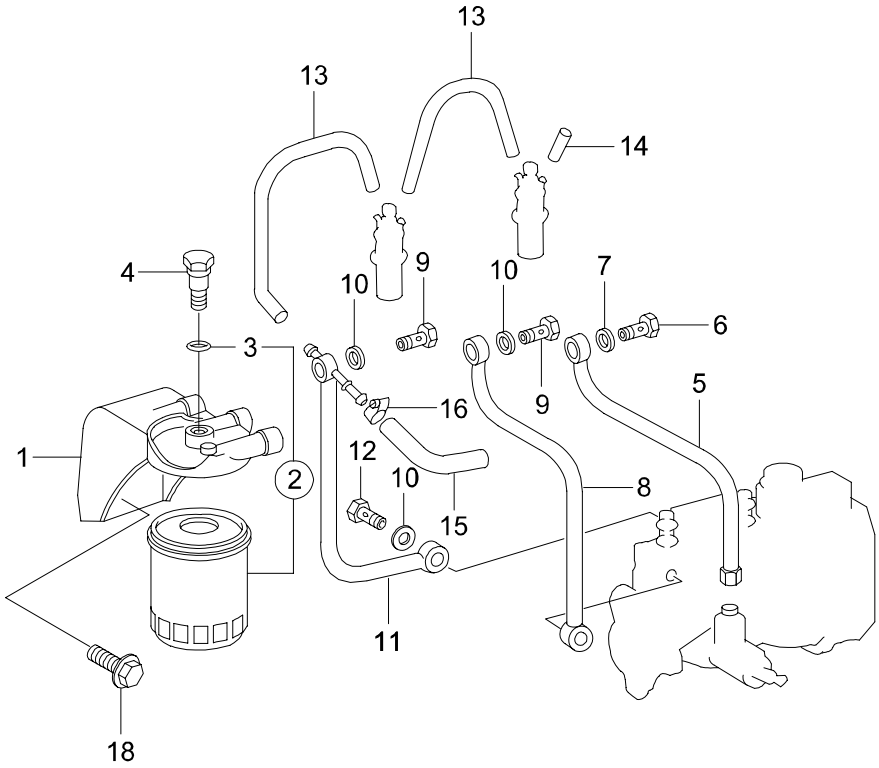

2230 FUEL FILTER & LINE(OM600)

ITC	KEY NO. PART NO	PART NAME OPTION	L/R	T/M	DRV	MODEL 662LA									EFF. DATE FROM	EFF. DATE TO	REMARK
	[01] 6610923608	*BRKT-FUEL FILTER*				1									02'1101	06'0228	
	[02] 6610903055	*FILTER KIT-FUEL*				1									02'1101	06'0228	
	[03] 0099979248	*RING-O*				1									02'1101	06'0228	
	[04] 6049900063	*BOLT*				1									02'1101	06'0228	
	[05] 6020700132	*TUBE ASSY-FUEL*				1									02'1101	06'0228	L=215
	[06] 915036006102	*BOLT*				1									02'1101	06'0228	
	[07] 007603010100	*RING-SEAL*				2									02'1101	06'0228	A10X14
	[08] 6610705332	*TUBE ASSY-FUEL*				1									02'1101	06'0228	L=145
	[09] 915036008100	*BOLT*				2									02'1101	06'0228	
	6619903263	IMMO				1									02'1101	06'0228	
	[10] 007603012113	*RING-SEAL*				2									02'1101	06'0228	A12X17
	[11] 6620703532	*TUBE ASSY-FUEL*				1									02'1101	06'0228	
	[12] 6010700146	*VALVE ASSY-CHECK*				1									02'1101	06'0228	
	[13] 4030780081	*HOSE-FUEL RETURN*				1									02'1101	06'0228	L=230
	6040780581					4									02'1101	06'0228	L=165
	[14] 4030700055	*CAP ASSY-RUBBER*				1									02'1101	06'0228	

2230 FUEL FILTER & LINE(OM600)

ITC	KEY NO. PART NO	PART NAME OPTION	L/R	T/M	DRV	MODEL 662LA									EFF. DATE FROM	EFF. DATE TO	REMARK
	[15] 6629973382	*HOSE-FUEL RETURN*				1									02'1101	06'0228	L=405
	[16] 916002013100	*CLAMP*				1									02'1101	06'0228	

2311 AIR CLEANER(OM662LA)

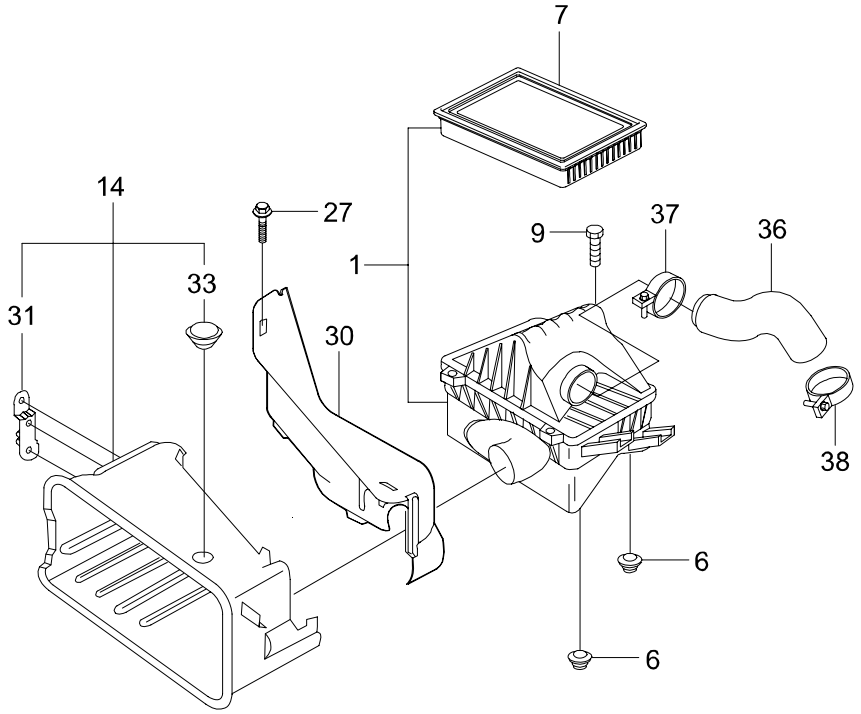

2311 - 01

2311 AIR CLEANER(OM662LA)

ITC	KEY NO. PART NO	PART NAME OPTION	L/R	T/M	DRV	MODEL 662LA	EFF. DATE FROM	EFF. DATE TO	REMARK
	[01] 2311005322	*AIR CLEANER ASSY*				1	02'1201	06'0228	
	[06] 2316005030	*INSULATOR-AIR CLEANER MTG NO1*				2	02'1201	06'0228	
	[07] 2319005322	*ELEMENT ASSY*				1	02'1201	06'0228	
	[09] 957070830D	*BOLT*				4	02'1201	06'0228	M8X1.25X30
	[14] 2355005034	*SHIELD ASSY-AIR INTAKE*				1	02'1201	06'0228	
	[27] 916040614D	*BOLT*				5	02'1201	06'0228	
	[30] 2355205033	*COVER-AIR INTAKE SHIELD*				1	02'1201	06'0228	
	[31] 2355505030	*BRKT-SHEILD SUPT*				1	02'1201	06'0228	
	[33] 9514016300	*PLUG-BLIND*				1	02'1201	06'0228	M16X3.0T
	[36]	*HOSE-AIR CLEANER TO TURBO CHARGER*							
	2372105320					1	02'1201	03'0429	
Y	2372105321					1	03'0430	06'0228	CLEANER->TURBO CHARGER
	[37] 2374105090	*CLAMP*				1	02'1201	05'1231	M90
	[38] 2374105070	*CLAMP*				1	02'1201	06'0228	M70

2330 AIR INTER COOLER

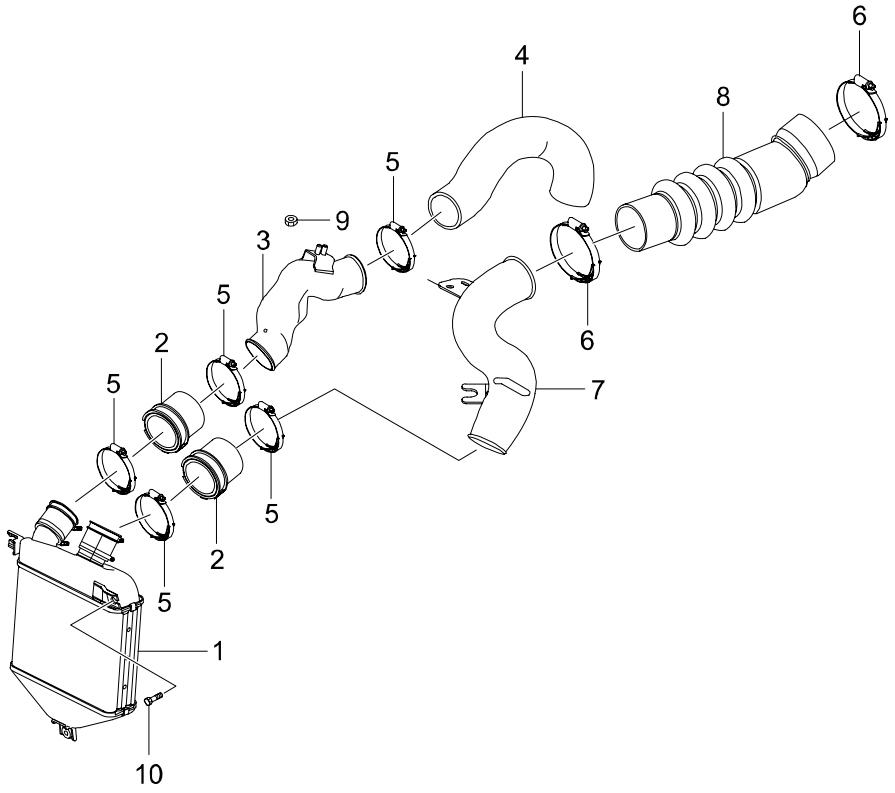

2330 AIR INTER COOLER

ITC	KEY NO. PART NO	PART NAME OPTION	L/R	T/M	DRV	MODEL 662LA									EFF. DATE FROM	EFF. DATE TO	REMARK
	[01] 2371005321	*INTER COOLER ASSY-TURBO*				1									02'1201	06'0228	
	[02] 2374505322X	*HOSE-INTERCOOLER INLET*				2									02'1201	06'0228	
	[03] 2374005322	*DUCT-TURBO CHARGER TO INTER COOLER*				1									02'1201	06'0228	
	[04] 2374105321	*HOSE*				1									02'1201	06'0228	
	[05] 2374105070	*CLAMP*				5									02'1201	06'0228	M70
	[06] 2374105080	*CLAMP*				2									02'1201	06'0228	M80
	[07] 2376005322X	*DUCT-INTER COOLER TO ENG*				1									02'1201	06'0228	
	[08] 2376105320	*HOSE*				1									02'1201	06'0228	
	[09] 928840600D	*NUT*				2									02'1201	06'0228	M6X1.0
	[10] 982940630D	*SCREW*				3									02'1201	06'0228	M6X1.0X30

2411 EXHAUST SYSTEM(TURBO)

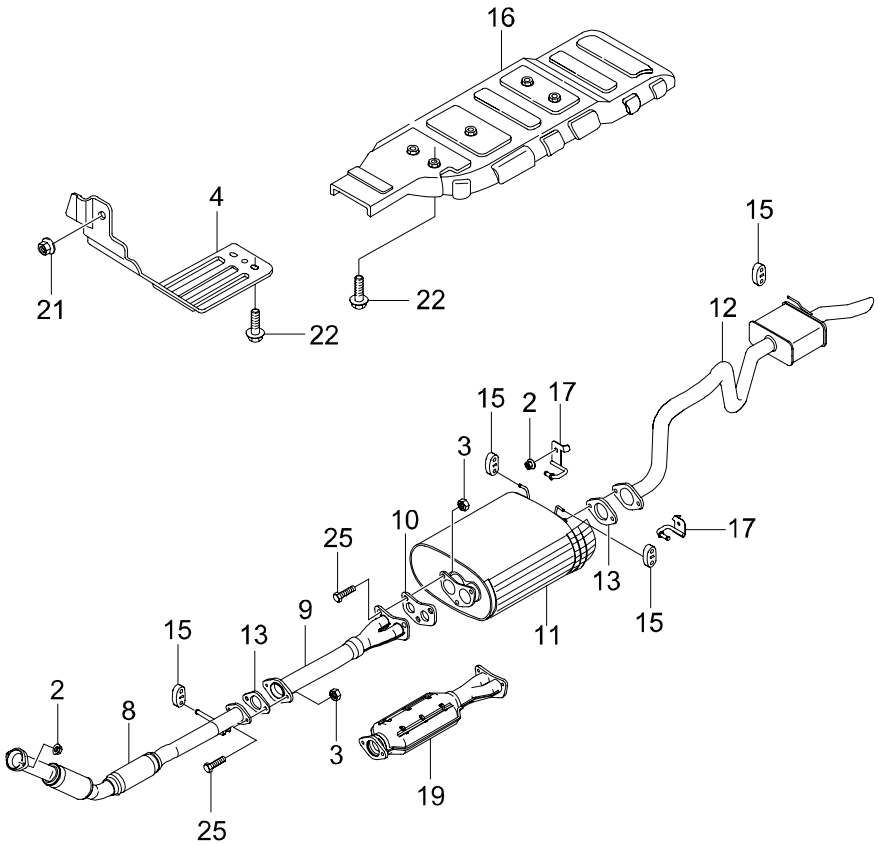

2411 - 01

2411 EXHAUST SYSTEM(TURBO)

ITC	KEY NO. PART NO	PART NAME OPTION	L/R	T/M	DRV	MODEL 662LA	EFF. DATE FROM	EFF. DATE TO	REMARK
	[02]	*NUT*							
	928840800D					4	02'1201	06'0228	M8X1.25
	[03]	*NUT*							
	928961000D					7	02'1201	06'0228	M10X1.25
	[04]	*PROTECTOR ASSY-HEAT DASH*							
	2424505631					1	02'1201	06'0228	
	[08]	*PIPE ASSY-EXHAUST FRT*							
	2423005210					1	02'1201	03'0612	
O	2423005212					1	03'0613	06'0228	
	[09]	*PIPE ASSY-CTR TURBO*							
	2435005310	GENERAL REGION(NON EMISSION CIRTIFICATED)				1	02'1201	06'0228	
	[10]	*GASKET*							
	2434105030					1	02'1201	06'0228	
	[11]	*MUFFLER ASSY*							
	2443005410					1	02'1201	06'0228	
	[12]	*PIPE ASSY-EXHAUST TAIL*							
	2463007410					1	02'1201	04'0513	
Y	2463007411					1	04'0514	05'0224	
Y	2463007412					1	05'0225	05'0712	
Y	2463007413					1	05'0713	06'0228	
	[13]	*GASKET*							
	2464105030					2	02'1201	06'0228	
	[15]	*RING*							
	2426105400					4	02'1201	06'0228	
	[16]	*PROTECTER-FLOOR HEAT*							
	2424905032					1	02'1201	06'0228	
	[17]	*ROD-MUFFLER MTG RR*							
	2447507440		LH			1	02'1201	06'0228	
	2447507450		RH			1	02'1201	06'0228	
	[19]	*CONVERTER ASSY-DOC*							
	2432007110	EMISSION CERTICFICATED REGION				1	02'1201	03'0807	
Y	2432007111					1	03'0808	06'0228	

2411 EXHAUST SYSTEM(TURBO)

ITC	KEY NO. PART NO	PART NAME OPTION	L/R	T/M	DRV	MODEL 662LA									EFF. DATE FROM	EFF. DATE TO	REMARK
	[21] 928840600D	*NUT*				1									02'1201	06'0228	M6X1.0
	[22] 982940614D	*SCREW*				7									02'1201	06'0228	M6X1.0X14
	[25] 912471035D	*BOLT*				5									02'1201	06'0228	M10X1.25X35

2430 EXHAUST GAS RECIRCULATION SYSTEM

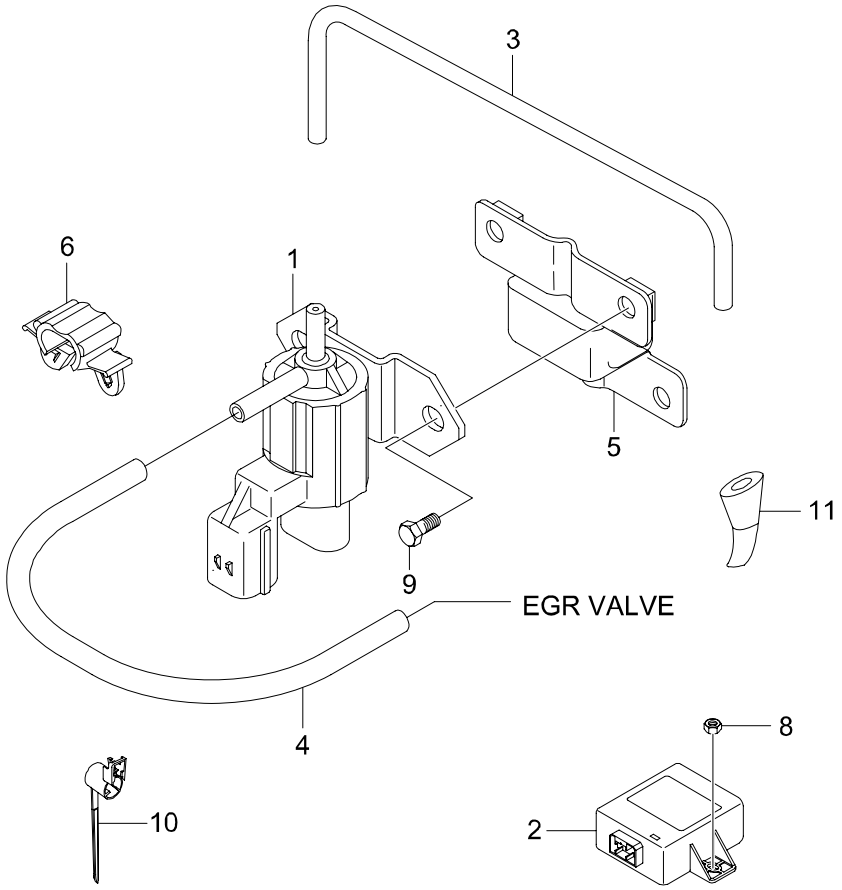

2430 EXHAUST GAS RECIRCULATION SYSTEM

ITC	KEY NO. PART NO	PART NAME OPTION	L/R	T/M	DRV	MODEL 662LA									EFF. DATE FROM	EFF. DATE TO	REMARK
	[02]	*CONTROL UNIT-EGR*															
	28800070A0			M		1									02'1201	03'1226	W/O DYGNOSIS
	28800071A0			A		1									02'1201	03'1226	W/O DYGNOSIS

2431 EXHAUST GAS RECIRCULATION SYSTEM(KOREA2004)

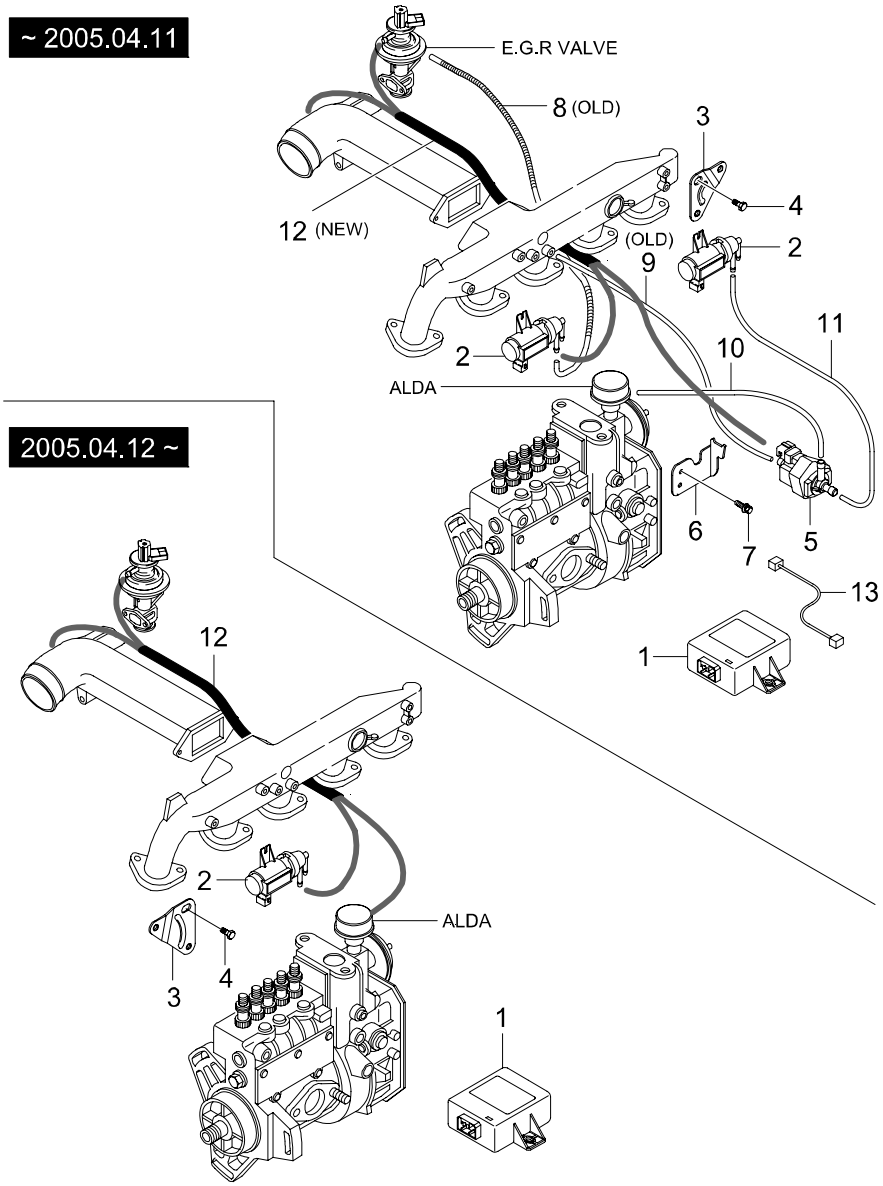

2431 EXHAUST GAS RECIRCULATION SYSTEM(KOREA2004)

ITC	KEY NO. PART NO	PART NAME OPTION	L/R	T/M	DRV	MODEL 662LA	EFF. DATE FROM	EFF. DATE TO	REMARK
	[01]	*EGR CONTROL UNIT*							
	2880007000			M		1	03'1226	06'0228	ADDED DAIGNOSIS
	2880007100			A		1	03'1226	06'0228	ADDED DAIGNOSIS
	[02]	*MODULATOR-VACUUM*							
	6655403197					2	02'1201	04'1206	
Y	6655403497					2	04'1207	06'0228	QUANTITY(2EA => 1EA) (2005.04.12~)
	[03]	*BRKT-VACUUM MODULATOR*							
	6625403035					2	02'1201	06'0228	QUANTITY(2EA => 1EA) (2005.04.12~)
	[04]	*BOLT*							
	914007006007					6	02'1201	06'0228	M6X16,QUANTITY(6EA =>3EA) (2005.04.12~)
	[05]	*SWITCH ASSY-ELECTRIC VALVE*							
	6625403097					1	02'1201	05'0411	ALDA CONTROL
	[06]	*BRKT-ELECTRIC SWITCH VALVE*							
	6625403025					1	02'1201	05'0411	ALDA CONTROL
	[07]	*BOLT*							
	6625403026					2	02'1201	05'0411	M4X12
	[08]	*LINE ASSY-VACUUM EGR*							
	6620709138					1	02'1201	03'0227	MODULATOR->EGR V/V
	[09]	*LINE ASSY-BOOST INTAKE*							
	6620706038					1	02'1201	03'0227	MANIFOLD->V/V SWITCH
	[10]	*LINE ASSY-BOOST ALDA*							
	6620707038	KOR2004				1	02'1201	05'0411	V/V SWITCH->ALDA
	[11]	*LINE ASSY-VACUUM MODULATOR*							
	6620708138					1	02'1201	05'0411	MODULATOR->V/V SWITCH
	[12]	*LINE ASSY-BOOST & EGR*							
	6620706238	KOR2004				1	03'0228	04'0704	UNIFIED[08]&[09]
Y	6620709938	KOR2004				1	04'0705	05'0411	UNIFIED[08]&[09]
N	6620708538					1	05'0412	06'0206	
O	6620708638					1	06'0207	06'0228	
	[13]	*WIRING ASSY-EXTENSION*							
	6625403125					1	02'1201	05'0411	FROM SOL V/V TO T/M EXTN WIRING

2610 BATTERY & CABLE

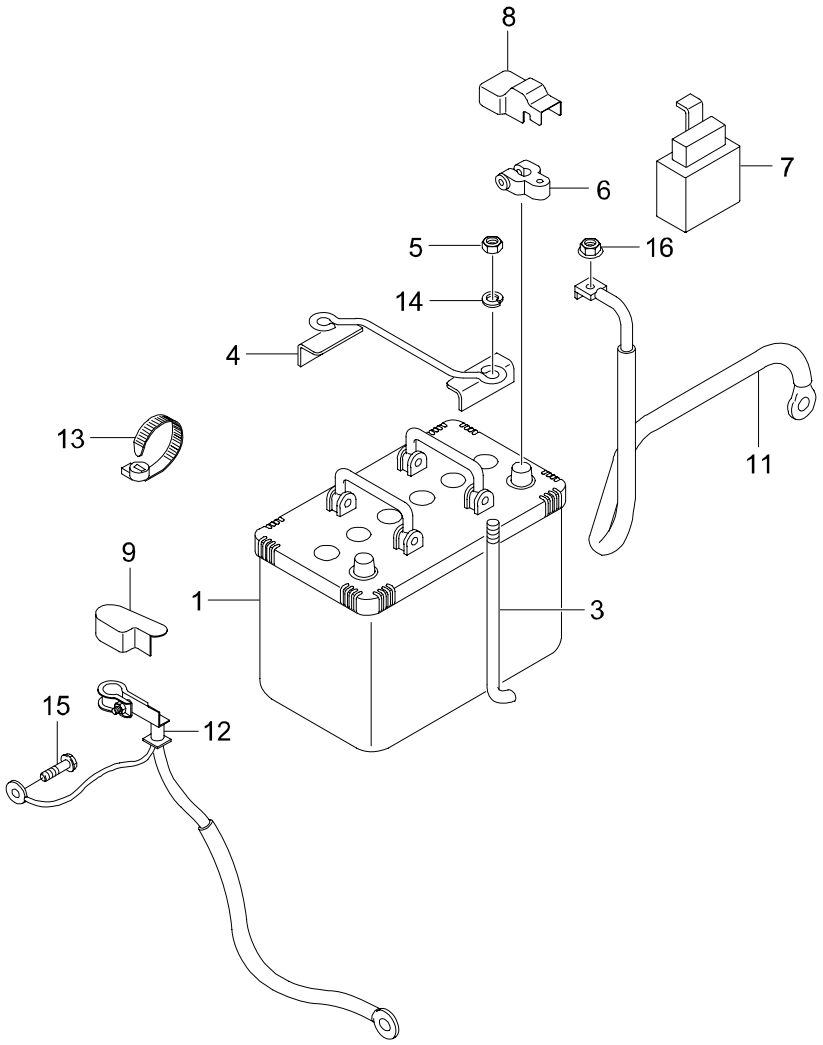

2610 BATTERY & CABLE

ITC	KEY NO. PART NO	PART NAME OPTION	L/R	T/M	DRV	MODEL 662LA	EFF. DATE FROM	EFF. DATE TO	REMARK
	[01]	*BATTERY ASSY*							
	2680205111					1	02'1201	04'0830	SEABANG
O	2680205112					1	04'0831	05'0301	SEABANG
Y	2680205113					1	05'0302	06'0228	SEABANG
	[03]	*BOLT*							
	2685005000					2	02'1201	06'0228	
	[04]	*CLAMP*							
	2686005400					1	02'1201	06'0228	
	[05]	*NUT*							
	920240800D					2	02'1201	06'0228	M8X1.25
	[06]	*TERMINAL ASSY-BATTERY CABLE*							
	2691005001					1	02'1201	06'0228	
	[07]	*BOX ASSY-FUSE*							
	8231005000					1	02'1201	06'0228	WITH [08]CAP
	[08]	*CAP-TERMINAL RING*							
	2697005000					1	02'1201	06'0228	POSITIVE(RED)
	[09]	*CAP-TERMINAL RING*							
	2697105000					1	02'1201	06'0228	NEGATIVE(BLACK)
	[11]	*CABLE-BATTERY POSITIVE*							
	2694005710					1	02'1201	02'1226	
Y	2694005711					1	02'1227	03'0729	STARTER SOLENOID CONNECTOR (M5->M6)
Y	2694005712					1	03'0730	06'0228	CHANGED TERMINAL MATERIAL
	[12]	*CABLE-BATTERY GROUND*							
	2695005101					1	02'1201	03'0729	
Y	2695005102					1	03'0730	06'0228	CHANGED TERMINAL MATERIAL
	[13]	*CLIP*							
	2696005100					1	02'1201	06'0228	
	[14]	*WASHER*							
	933100800D					2	02'1201	06'0228	M8

2610 BATTERY & CABLE

ITC	KEY NO. PART NO	PART NAME OPTION	L/R	T/M	DRV	MODEL 662LA									EFF. DATE FROM	EFF. DATE TO	REMARK
	[15] 9900406000	*BOLT*				1									02'1201	06'0228	M6X1.0X16
	[16] 928840800D	*NUT*				1									02'1201	06'0228	M8X1.25

2820 PREHEATING CONTROL SYSTEM

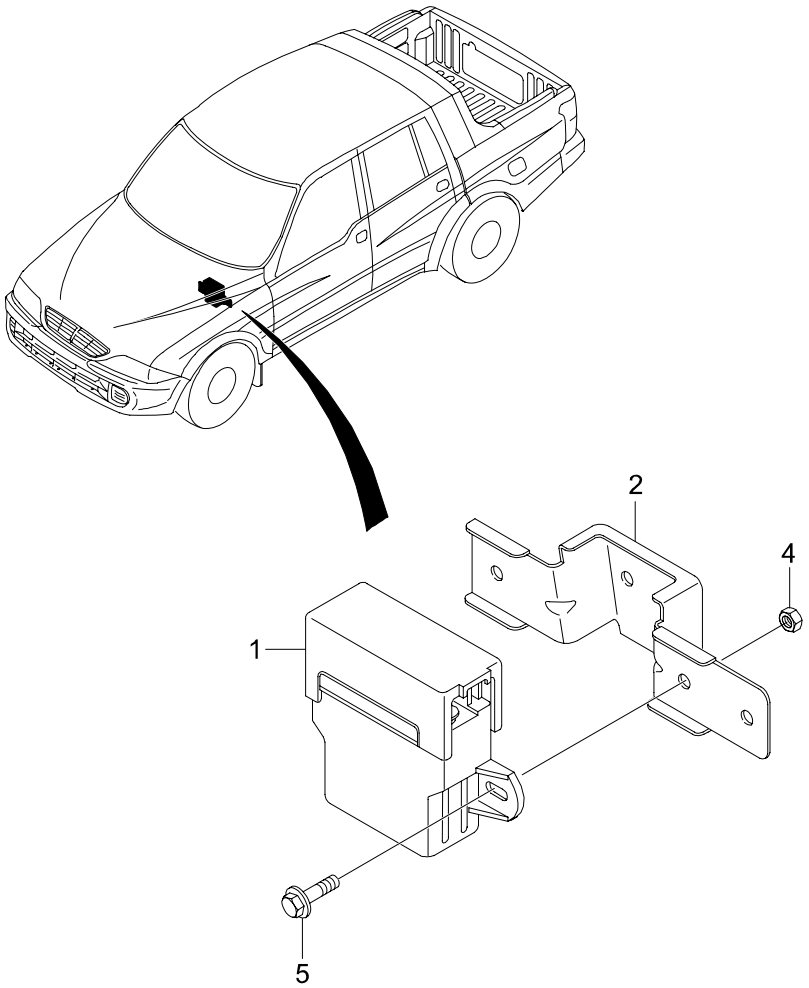

2820 PREHEATING CONTROL SYSTEM

I T C	KEY NO. PART NO	PART NAME OPTION	L / R	T / M	D R V	MODEL 662LA									EFF. DATE FROM	EFF. DATE TO	REMARK
	[01] 6625453532	*RELAY-PREHEATING TIME*				1									02'1201	06'0228	
	[02] 2841005002	*BRKT-PREHEATING TIME RELAY*				1									02'1201	06'0228	
	[04] 928840600D	*NUT*				1									02'1201	06'0228	M6X1.0
	[05] 982640616D	*SCREW*				4									02'1201	06'0228	M6X1.0X16

3010 CLUTCH DISC & COVER

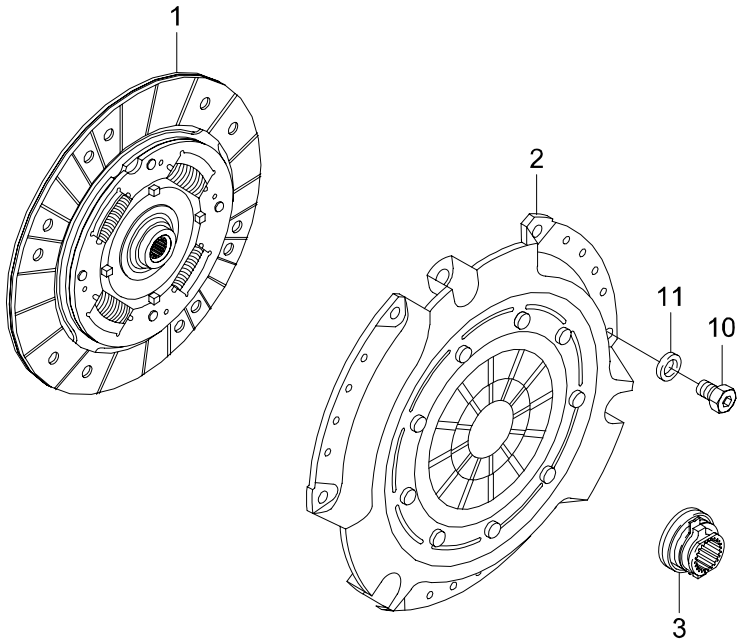

3010 CLUTCH DISC & COVER

ITC	KEY NO. PART NO	PART NAME OPTION	L/R	T/M	DRV	MODEL 662LA									EFF. DATE FROM	EFF. DATE TO	REMARK
	[01]	*DISC-CLUTCH*															
	3010008850			M		1									02'1201	04'0130	4WD,SMF
	3010008900			M		1									02'1201	03'1225	2WD,SMF
	3010008550			M		1									03'1226	04'0211	DMF
O	3010008551			M		1									04'0212	06'0228	DMF
	[02]	*COVER ASSY-CLUTCH*															
	3020008800			M		1									02'1201	03'1225	SMF,WIA
	3020008550			M		1									03'1226	06'0228	DMF,WIA
	[03]	*BEARING-CLUTCH RELEASE*															
	3032005011			M		1									02'1201	06'0228	
	[10]	*BOLT-SOCKET*															
	9170808181			M		6									02'1201	06'0228	M8X1.25X18
	[11]	*WASHER*															
	933840800D			M		6									02'1201	06'0228	M8

3020 CLUTCH CONTROL

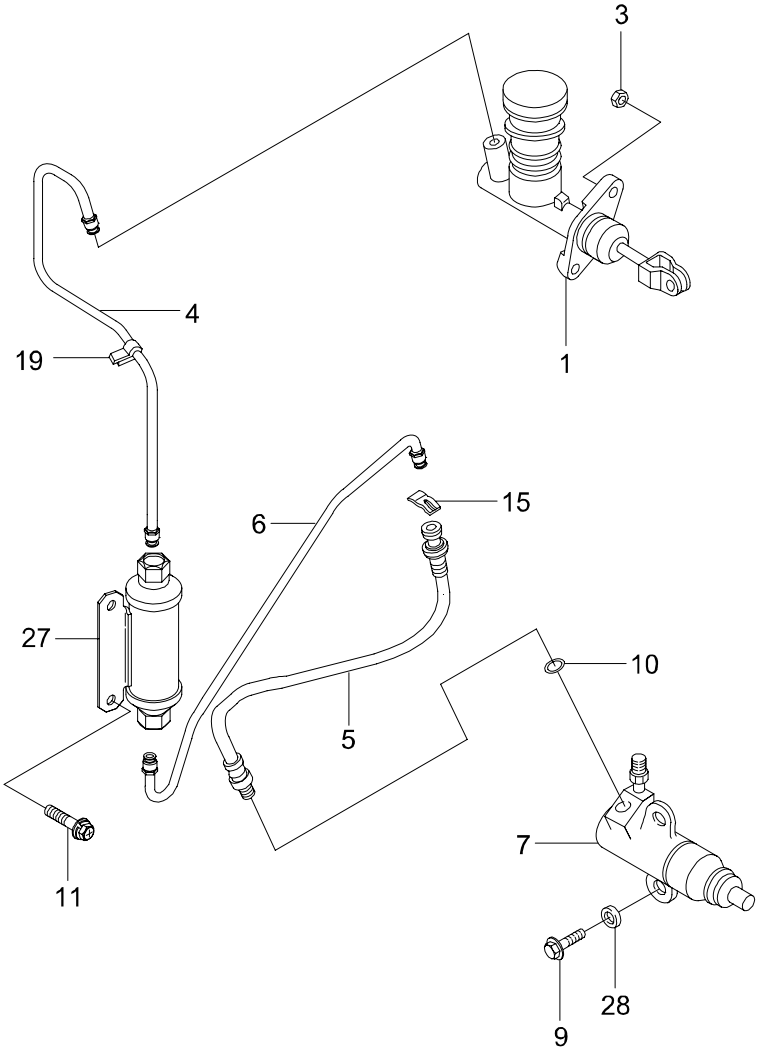

3020 CLUTCH CONTROL

ITC	KEY NO. PART NO	PART NAME OPTION	L/R	T/M	DRV	MODEL 662LA	EFF. DATE FROM	EFF. DATE TO	REMARK
	[01]	*CYLINDER ASSY-CLUTCH MASTER*							
	3051005002			M		1	02'1201	05'0106	
Y	3051005003			M		1	05'0107	06'0228	
	[03]	*NUT*							
	928840800D			M		2	02'1201	06'0228	M8X1.25
	[04]	*TUBE ASSY-CLUTCH M/CYL TO DAMPER*							
	3052005401			M		1	02'1201	06'0228	
	[05]	*HOSE ASSY-CLUTCH*							
	3053005121			M		1	02'1201	06'0228	
	[06]	*TUBE ASSY-DAMPER CYL TO RELEASE CYL*							
	3053005403			M		1	02'1201	06'0228	
	[07]	*CYLINDER ASSY-CLUTCH RELEASE*							
	3054005012X			M		1	02'1201	06'0228	
	[09]	*BOLT*							
	958041025D			M		2	02'1201	06'0228	M10X1.5X25
	[10]	*GASKET-FRT BRAKE HOSE CALIPER*							
	4871603000			M		1	02'1201	06'0228	
	[11]	*SCREW*							
	982740625D			M		1	02'1201	06'0228	M6X1.0X25
	[15]	*CLIP*							
	4873503001			M		1	02'1201	06'0228	
	[19]	*CLIP*							
	4869105000			M		1	02'1201	06'0228	
	[27]	*CHAMBER ASSY-CLUTCH OIL*							
	3056008001			M		1	02'1201	06'0228	
	[28]	*GASKET-FRT BRAKE HOSE CALIPER*							
	4871603000			M		1	02'1201	06'0228	

3030 CLUTCH PEDAL

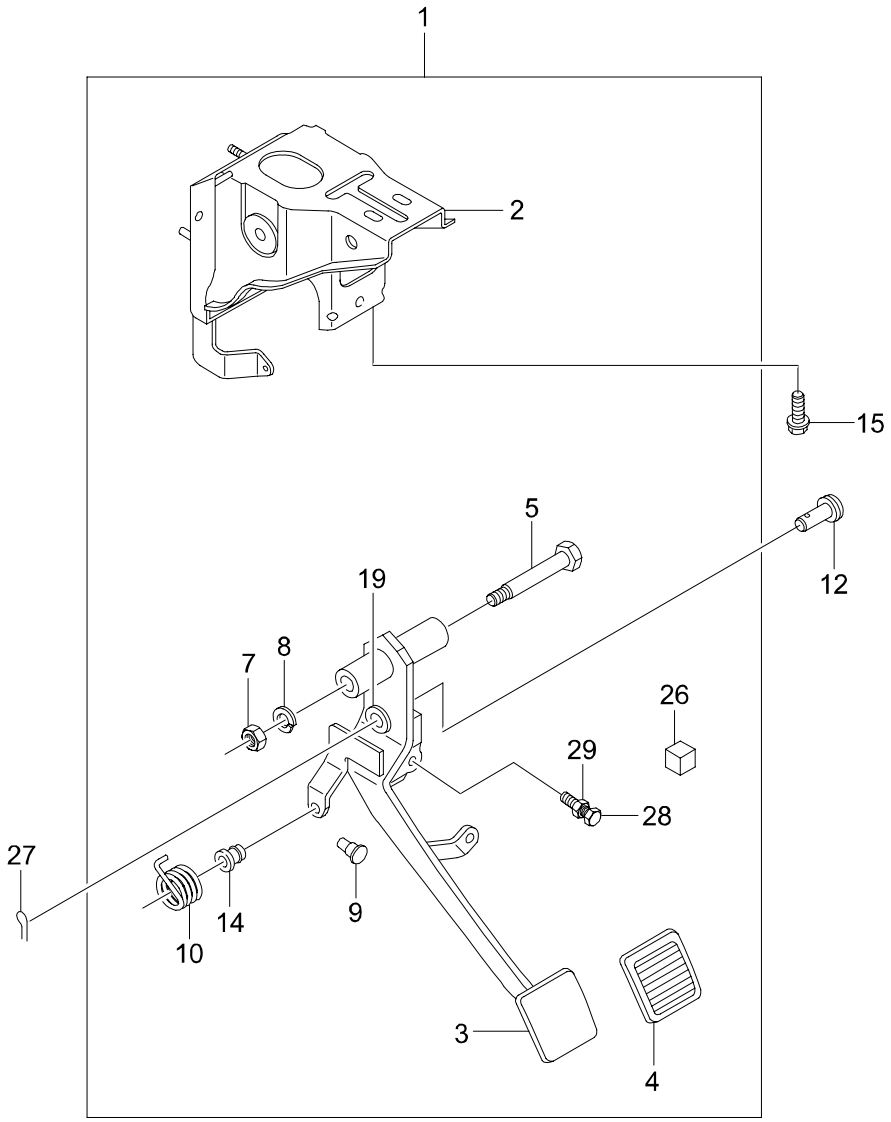

3030 CLUTCH PEDAL

ITC	KEY NO. PART NO	PART NAME OPTION	L/R	T/M	DRV	MODEL 662LA									EFF. DATE FROM	EFF. DATE TO	REMARK
	[01] 3040005501	*PEDAL ASSY-CLUTCH*				1									02'1201	06'0228	
	[02] 3042006000	*BRKT ASSY-CLUTCH PEDAL MTG*				1									02'1201	06'0228	
	[03] 3041005000	*PEDAL ASSY-CLUTCH*				1									02'1201	06'0228	
	[04] 4886603000	*PAD-CLUTCH PEDAL*		M		1									02'1201	06'0228	
	[05] 3043205000	*FULCRUM-CLUTCH PEDAL*		M		1									02'1201	06'0228	
	[07] 9203410001	*NUT*				1									02'1201	06'0228	
	[08] 933101000D	*WASHER*				1									02'1201	06'0228	
	[09] 3041505001	*PAD-STOPPER CONTACT*				1									02'1201	06'0228	
	[10] 3043405001	*SPRING*				1									02'1201	06'0228	
	[12] 3046005001	*PIN-CLEVIS*				1									02'1201	06'0228	
	[14] 3043305010X	*BUSH*				2									02'1201	06'0228	
	[15] 958140816D	*BOLT*				2									02'1201	06'0228	
	[19] 30409050A0	*BUSH*				1									02'1201	06'0228	
	[26] 8576006000	*SWITCH ASSY-INTERLOCK*				1									02'1201	06'0228	
	[27] 9531410001	*PIN-SNAP*		M		1									02'1201	06'0228	

3030 CLUTCH PEDAL

ITC	KEY NO. PART NO	PART NAME OPTION	L/R	T/M	DRV	MODEL 662LA									EFF. DATE FROM	EFF. DATE TO	REMARK
	[28] 9134710301	*BOLT*				1									02'1201	06'0228	
	[29] 9211410001	*NUT*				1									02'1201	06'0228	

3110 T/M & T/C ATTACHMENT

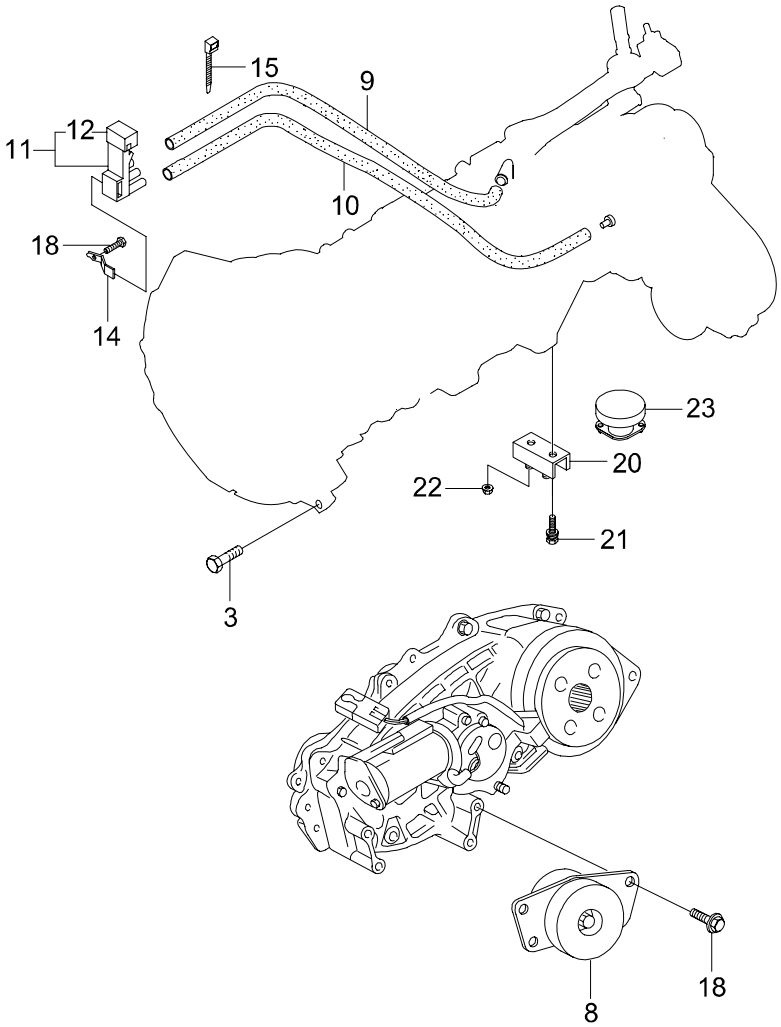

3110 T/M & T/C ATTACHMENT

ITC	KEY NO. PART NO	PART NAME OPTION	L/R	T/M	DRV	MODEL 662LA									EFF. DATE FROM	EFF. DATE TO	REMARK
	[03] 9170808181	*BOLT-SOCKET*		M		6									02'1201	06'0228	M8X1.25X18
	[08] 3204005110	*DAMPER ASSY-PLANE*		M		1									02'1201	06'0228	
	3204005610	BTRA		A		1									02'1201	06'0228	
	[09] 3100008120	*HOSE ASSY-VENTILATION*				1									02'1201	06'0228	L=730mm
	[10] 3637105061	*HOSE-VENTILATION* 4WD ONLY				1									02'1201	06'0228	L=800mm
	[11] 3638005000	*PIPE ASSY-VENTLATION*				1									02'1201	06'0228	WITH CAP
	[12] 3638605000	*CAP ASSY*				1									02'1201	06'0228	
	[14] 3638705010	*BRKT-VENT PIPE*				1									02'1201	06'0228	
	[15] 8295205000	*BAND*				2									02'1201	06'0228	
	[18] 916271025D	*BOLT*				5									02'1201	06'0228	M10X1.5X25
	[20] 3193005101	*INSULATOR-ENGINE MTG RR*				1									02'1201	06'0228	
	[21] 958371025D	*BOLT*				2									02'1201	06'0228	M10X1.25X25
	[22] 928961000D	*NUT*				4									02'1201	06'0228	M10X1.25
	[23] 3194105100	*DAMPER-CROSS MEMBER*				1									02'1201	06'0228	

3170 TRANSMISSION-TSM54(M/T,4WD)

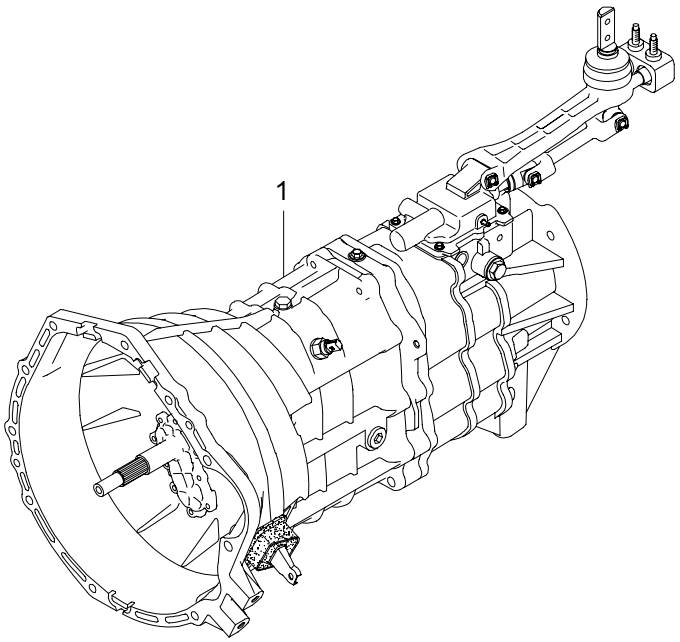

3170 TRANSMISSION-TSM54(M/T,4WD)

ITC	KEY NO. PART NO	PART NAME OPTION	L/R	T/M	DRV	MODEL 662LA									EFF. DATE FROM	EFF. DATE TO	REMARK
	[01]	*T/M ASSY*															
	3101008010			M		1									02'1201	03'0225	CHARGED T/M OIL
O	3101008011	4WD,SMF		M		1									03'0226	03'1229	CHANGED OIL(75W90->ATF)
O	3101008012			M		1									03'1230	05'0320	
O	3101008013			M		1									05'0321	06'0228	
	3101008200	4WD,DMF,FORK TYPE		M		1									03'1226	05'0313	2004 M/Y
O	3101008201	4WD,DMF,FORK TYPE		M		1									05'0314	05'0726	
O	3101008202	4WD,DMF,FORK TYPE		M		1									05'0727	06'0228	

3171 CLUTCH HOUSING-TSM54(M/T,4WD)

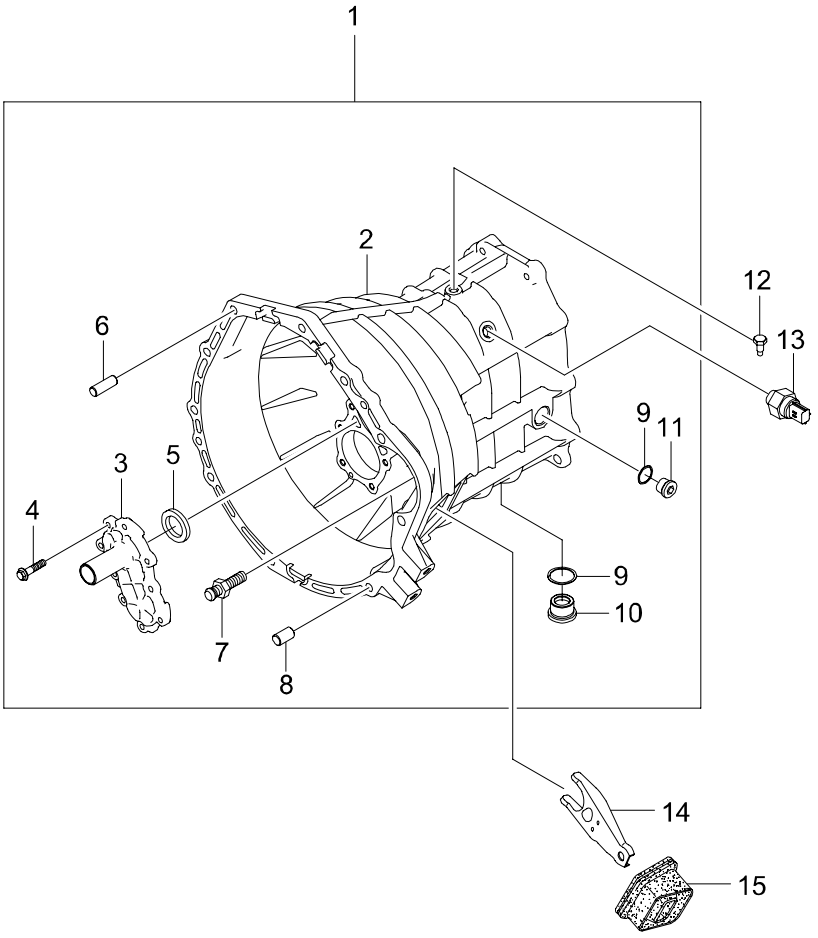

3171 CLUTCH HOUSING-TSM54(M/T,4WD)

ITC	KEY NO. PART NO	PART NAME OPTION	L/R	T/M	DRV	MODEL 662LA									EFF. DATE FROM	EFF. DATE TO	REMARK
	[01] 3111008000	*HOUSING ASSY-T/M*		M		1									02'1201	06'0228	
	[02] 3111108000	*HOUSING-T/M*		M		1									02'1201	06'0228	
	[03] 3163208000	*COVER-FRONT FORK*		M		1									02'1201	06'0228	
	[04] 916270825D	*BOLT-FLANGE*		M		9									02'1201	06'0228	M8X1.25
	[05] 3164108000	*SEAL-INPUT OIL*		M		1									02'1201	06'0228	
	[06] 9538410200	*PIN*		M		2									02'1201	06'0228	M10
	[07] 3033105001	*PIVOT-CLUTCH RELEASE FORK*		M		1									02'1201	06'0228	
	[08] 3152608000	*PIN-DOWEL*		M		2									02'1201	06'0228	
	[09] 007603024105	*RING-SEAL*		M		2									02'1201	06'0228	
	[10] 3111208000	*PLUG-OIL DRAIN*		M		1									02'1201	06'0228	
	[11] 3111308000	*PLUG-OIL FILLER*		M		1									02'1201	06'0228	
	[12] 3176108000	*BOLT-INTERLOCK*		M		1									02'1201	06'0228	
	[13] 3111508000	*SWITCH ASSY-BACK LIGHT*		M		1									02'1201	06'0228	
	[14]	*FORK ASSY-CLUTCH RELEASE*															
	3034005001	SMF		M		1									02'1201	06'0228	
	3034005321	DMF		M		1									04'0212	06'0228	

3171 CLUTCH HOUSING-TSM54(M/T,4WD)

ITC	KEY NO. PART NO	PART NAME OPTION	L/R	T/M	DRV	MODEL 662LA									EFF. DATE FROM	EFF. DATE TO	REMARK
	[15] 3035105010	*BOOT-CLUTCH RELEASE FORK*		M		1									02'1201	06'0228	

3172 INPUT & OUTPUT SHAFT-TSM54(M/T,4WD)

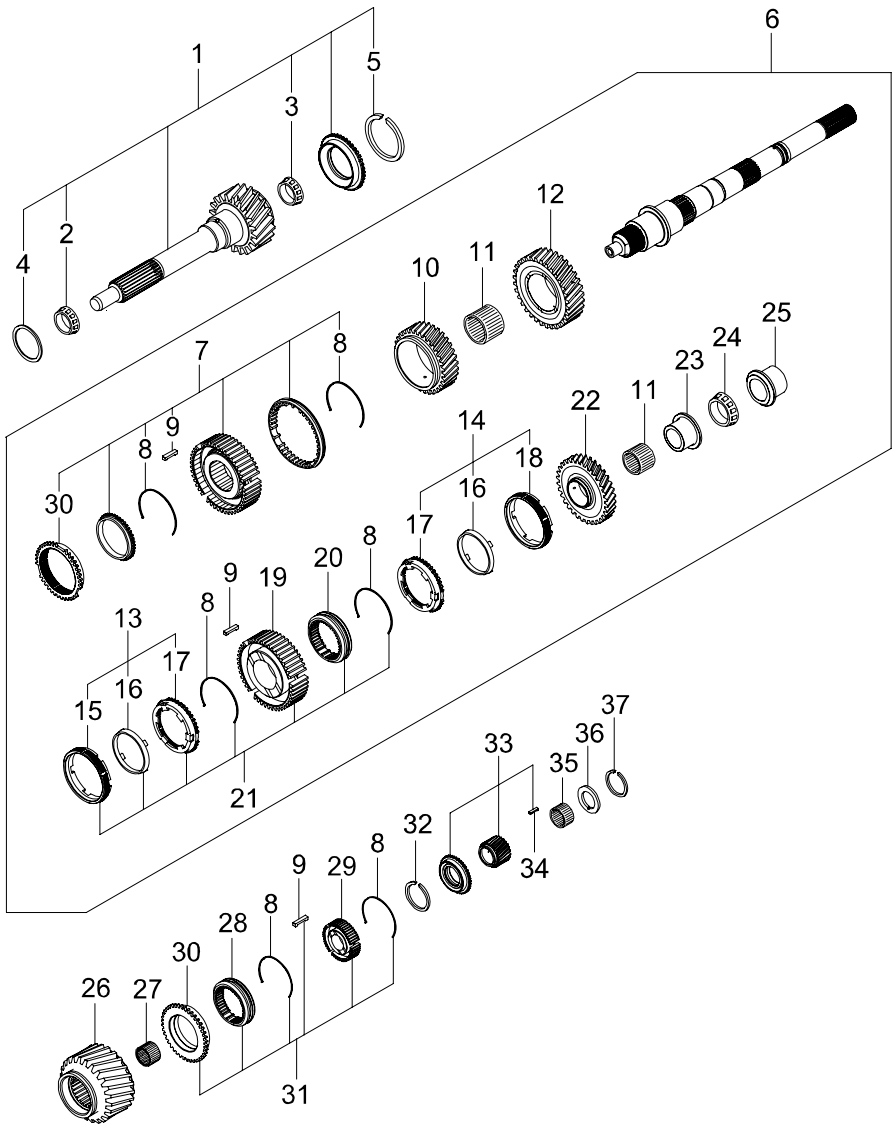

3172 - 01

3172 INPUT & OUTPUT SHAFT-TSM54(M/T,4WD)

ITC	KEY NO. PART NO	PART NAME OPTION	L/R	T/M	DRV	MODEL 662LA	EFF. DATE FROM	EFF. DATE TO	REMARK
	[01]	*SHAFT SUB ASSY-INPUT*							
	3120008000			M		1	03'0305	03'0307	SUB PART APPLY :ORDER BY 3121008000 + KEY NO(2,3,4,5)
O	3121008000	SMF		M		1	03'0308	06'0228	
	3141108000	DMF		M		1	03'1226	05'1231	2004 M/Y, ORDER BY 3140008022
O	3140008022			M		1	04'0201	06'0228	DMF:25T
	[02]	*BEARING-TAPER ROLLER MAIN*							
	3165008000			M		1	02'1201	06'0228	
	[03]	*BEARING-TAPER ROLLER MIDDLE*							
	3166008000			M		1	02'1201	06'0228	
	[04]	*SPACER-INPUT*							
	3161108010			M		1	02'1201	06'0228	T=0.75
	3161108020			M		1	02'1201	06'0228	T=0.80
	3161108030			M		1	02'1201	06'0228	T=0.85
	3161108040			M		1	02'1201	06'0228	T=0.90
	3161108050			M		1	02'1201	06'0228	T=0.95
	3161108060			M		1	02'1201	06'0228	T=1.00
	3161108070			M		1	02'1201	06'0228	T=1.05
	3161108080			M		1	02'1201	06'0228	T=1.10
	3161108090			M		1	02'1201	06'0228	T=1.15
	3161108100			M		1	02'1201	06'0228	T=1.20
	3161108110			M		1	02'1201	06'0228	T=1.25
	3161108120			M		1	02'1201	06'0228	T=1.30
	3161108130			M		1	02'1201	06'0228	T=1.35
	3161108140			M		1	02'1201	06'0228	T=1.40
	3161108150			M		1	02'1201	06'0228	T=1.45
	[05]	*RING-RETAIN 3RD & 4TH*							
	3162108010			M		1	02'1201	06'0228	T=2.80
	3162108020			M		1	02'1201	06'0228	T=2.85
	3162108030			M		1	02'1201	06'0228	T=2.90
	3162108040			M		1	02'1201	06'0228	T=2.95
	[06]	*SHAFT ASSY-OUTPUT*							
	3122008000			M		1	02'1201	06'0228	
	[07]	*SYNCHRONIZER ASSY*							
	3132008000			M		1	02'1201	06'0228	

3172 INPUT & OUTPUT SHAFT-TSM54(M/T,4WD)

ITC	KEY NO. PART NO	PART NAME OPTION	L/R	T/M	DRV	MODEL 662LA	EFF. DATE FROM	EFF. DATE TO	REMARK
	[08] 3131308000	*SPRING-SYNCHRONIZER*		M		6	02'1201	06'0228	
	[09] 3131408000	*KEY-SYNCHRO*		M		9	02'1201	06'0228	
	[10] 3125008000	*GEAR ASSY-3RD*		M		1	02'1201	06'0228	
	[11] 3168408001	*BEARING-NEEDLE*		M		2	02'1201	06'0228	
	[12] 3124008000	*GEAR ASSY-2ND*		M		1	02'1201	06'0228	
	[13] 3134008000	*CONE ASSY-DOUBLE 1ST*		M		1	02'1201	06'0228	
	[14] 3134008100	*CONE ASSY-DOUBLE 2ND*		M		1	02'1201	06'0228	
	[15] 3134308000	*RING-SYNCHRO INNER*		M		1	02'1201	06'0228	
	[16] 3134208000	*CONE-SYNCHRO MID*		M		2	02'1201	06'0228	
	[17] 3134108000	*RING-SYNCHRO OTR*		M		2	02'1201	06'0228	
	[18] 3134108100	*RING-SYNCHRO OTR*		M		1	02'1201	06'0228	
	[19] 3131108000	*HUB-SYNCHRONIZER 1ST & 2ND*		M		1	02'1201	06'0228	
	[20] 3131208000	*SLEEVE-DOUBLE SYNCHRO*		M		1	02'1201	06'0228	
	[21] 3131008000	*SYNCHRONIZER ASSY*		M		1	02'1201	06'0228	
	[22] 3123008000	*GEAR ASSY-1ST*		M		1	02'1201	06'0228	

3172 INPUT & OUTPUT SHAFT-TSM54(M/T,4WD)

ITC	KEY NO. PART NO	PART NAME OPTION	L/R	T/M	DRV	MODEL 662LA									EFF. DATE FROM	EFF. DATE TO	REMARK
	[23]	*RACE-INR 1ST*															
	3122408000			M		1									02'1201	06'0228	
	[24]	*BEARING-TAPER ROLLER MAIN*															
	3165008000			M		1									02'1201	06'0228	
	[25]	*RACE-REVERSE INR*															
	3122308000			M		1									02'1201	06'0228	
	[26]	*GEAR ASSY-REVERSE*															
	3127008000			M		1									02'1201	06'0228	
	[27]	*BEARING-RVS IDLER NEEDLE*															
	3168108000			M		1									02'1201	06'0228	
	[28]	*SLEEVE-SINGLE SYNCHRO*															
	3132208000			M		1									02'1201	06'0228	
	[29]	*HUB-SYNCHRO 5TH & REV*															
	3133108000			M		1									02'1201	06'0228	
	[30]	*RING-SYNCHRO OTR*															
	3132308000			M		2									02'1201	06'0228	
	[31]	*SYNCHRONIZER ASSY*															
	3133008000			M		1									02'1201	06'0228	
	[32]	*RING-RETAIN 5TH & REV*															
	3162308010			M		1									02'1201	06'0228	T=2.55
	3162308020			M		1									02'1201	06'0228	T=2.60
	3162308030			M		1									02'1201	06'0228	T=2.65
	3162308040			M		1									02'1201	06'0228	T=2.75
	3162308050			M		1									02'1201	06'0228	T=2.75
	3162308060			M		1									02'1201	06'0228	T=2.80
	3162308070			M		1									02'1201	06'0228	T=2.90
	3162308080			M		1									02'1201	06'0228	T=2.95
	3162308090			M		1									02'1201	06'0228	T=3.00
	3162308100			M		1									02'1201	06'0228	T=2.55
	[33]	*GEAR ASSY-5TH*															
	3126008000			M		1									02'1201	06'0228	
	[34]	*PIN-SPRING*															
	001481003017			M		1									02'1201	05'0726	3X6, PIN TYPE
N	3126408000			M		1									05'0727	06'0228	5MM, BALL TYPE

3172 INPUT & OUTPUT SHAFT-TSM54(M/T,4WD)

ITC	KEY NO. PART NO	PART NAME OPTION	L/R	T/M	DRV	MODEL 662LA									EFF. DATE FROM	EFF. DATE TO	REMARK
	[35]	*BEARING-5TH NEEDLE*															
	3168208000			M		1									02'1201	06'0228	
	[36]	*WASHER-THRUST*															
	3153008010			M		1									02'1201	06'0228	T=5.00
	3153008020			M		1									02'1201	06'0228	T=4.98
	3153008030			M		1									02'1201	06'0228	T=4.96
	3153008040			M		1									02'1201	06'0228	T=4.94
	3153008050			M		1									05'0727	06'0228	T=5.5
	[37]	*RING-RETAIN 5TH O/S*															
	3162508010			M		1									02'1201	06'0228	T=2.50
	3162508020			M		1									02'1201	06'0228	T=2.55
	3162508030			M		1									02'1201	06'0228	T=2.60
	3162508040			M		1									02'1201	06'0228	T=2.65
	3162508050			M		1									02'1201	06'0228	T=2.70
	3162508060			M		1									02'1201	06'0228	T=2.75
	3162508070			M		1									02'1201	06'0228	T=2.80
	3162508080			M		1									02'1201	06'0228	T=2.85
	3162508090			M		1									02'1201	06'0228	T=2.90
	3162508100			M		1									02'1201	06'0228	T=2.95
	3162508110			M		1									02'1201	06'0228	T=3.00
	3162508120			M		1									02'1201	06'0228	T=3.05
	3162508130			M		1									02'1201	06'0228	T=3.10
	3162508140			M		1									02'1201	06'0228	T=3.15
	3162508150			M		1									02'1201	06'0228	T=3.20

3173 COUNT SHAFT GEAR-TSM54(M/T,4WD)

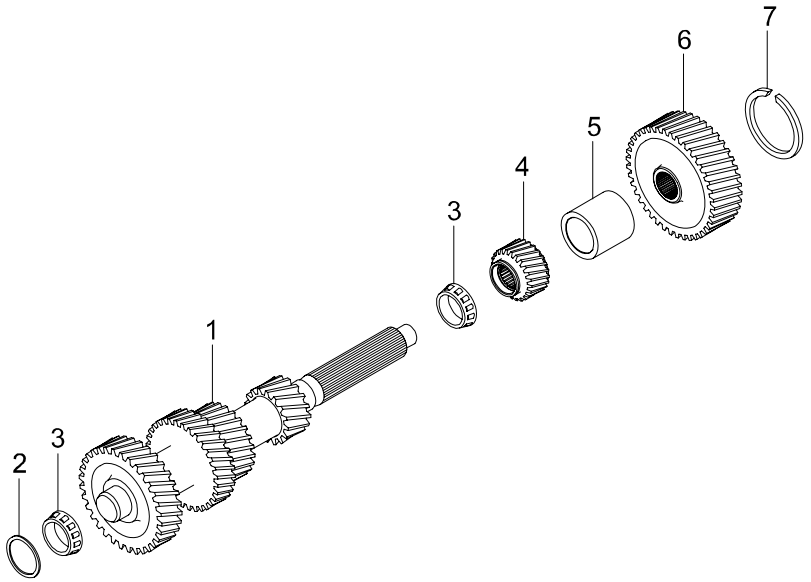

3173 COUNT SHAFT GEAR-TSM54(M/T,4WD)

ITC	KEY NO. PART NO	PART NAME OPTION	L/R	T/M	DRV	MODEL 662LA	EFF. DATE FROM	EFF. DATE TO	REMARK
	[01]	*SHAFT ASSY-COUNTER*							
	3151008000			M		1	02'1201	06'0228	SNAP RING TYPE, GEAR TEETH: 1(14), 2(23), 3(30), 4(34)
N	3151008002			M		1	03'1230	06'0228	LOCK NUT TYPE, GEAR TEETH: 1(14), 2(23), 3(30), 4(34)
	[02]	*SPACER-COUNTER*							
	3161208010			M		1	02'1201	06'0228	T=0.40
	3161208020			M		1	02'1201	06'0228	T=1.15
	3161208030			M		1	02'1201	06'0228	T=1.20
	3161208040			M		1	02'1201	06'0228	T=1.25
	3161208050			M		1	02'1201	06'0228	T=1.30
	3161208060			M		1	02'1201	06'0228	T=1.35
	3161208070			M		1	02'1201	06'0228	T=1.40
	3161208080			M		1	02'1201	06'0228	T=1.45
	3161208090			M		1	02'1201	06'0228	T=1.50
	3161208100			M		1	02'1201	06'0228	T=1.55
	[03]	*BEARING ASSY-COUNTER TAPER ROLLER*							
	3167008000			M		2	02'1201	06'0228	
	[04]	*GEAR-COUNTER RVS*							
	3127208000			M		1	02'1201	06'0228	
	[05]	*BUSH-COUNTER SHAFT*							
	3183708000			M		1	02'1201	06'0228	
	[06]	*GEAR-COUNTER 5TH*							
	3126308000			M		1	02'1201	06'0228	53T
	[07]	*RING-RETAIN 5TH COUNTER SHAFT*							
	3162408010			M		1	02'1201	06'0228	T=2.45
	3162408020			M		1	02'1201	06'0228	T=2.50
	3162408030			M		1	02'1201	06'0228	T=2.60
	3162408040			M		1	02'1201	06'0228	T=2.65
	3162408050			M		1	02'1201	06'0228	T=2.65
	3162408060			M		1	02'1201	06'0228	T=2.70
	3162408070			M		1	02'1201	06'0228	T=2.75
	3162408080			M		1	02'1201	06'0228	T=2.80
	3162408090			M		1	02'1201	06'0228	T=2.85
	3162408100			M		1	02'1201	06'0228	T=2.90
	3162408110			M		1	02'1201	06'0228	T=2.95

3174 ADAPTOR ASSY-TSM54(M/T,4WD)

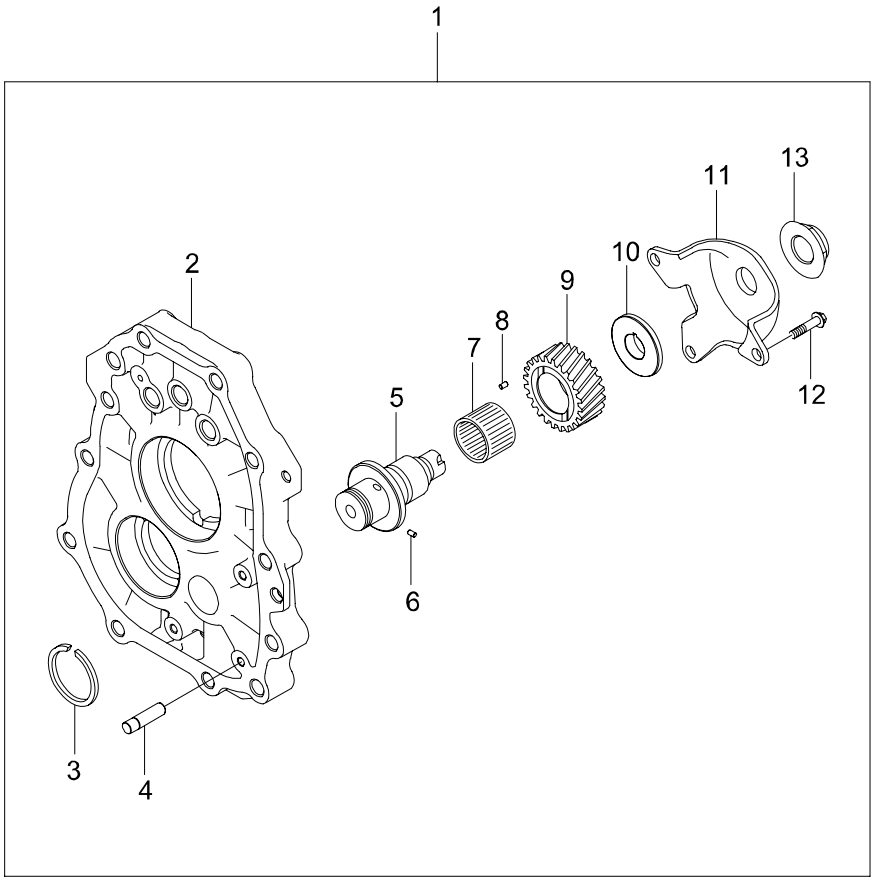

3174 ADAPTOR ASSY-TSM54(M/T,4WD)

ITC	KEY NO. PART NO	PART NAME OPTION	L/R	T/M	DRV	MODEL 662LA	EFF. DATE FROM	EFF. DATE TO	REMARK
	[01]	*ADAPTOR ASSY-T/M*							
	3112008000			M		1	02'1201	06'0228	
	[02]	*ADAPTOR-T/M*							
	3112108000			M		1	02'1201	06'0228	
	[03]	*RING-RETAIN RVS IDLER*							
	3162208010			M		1	02'1201	06'0228	T=1.70
	3162208020			M		1	02'1201	06'0228	T=1.75
	3162208030			M		1	02'1201	06'0228	T=1.80
	3162208040			M		1	02'1201	06'0228	T=1.85
	3162208050			M		1	02'1201	06'0228	T=1.90
	3162208060			M		1	02'1201	06'0228	T=1.95
	3162208070			M		1	02'1201	06'0228	T=2.00
	3162208080			M		1	02'1201	06'0228	T=2.05
	3162208090			M		1	02'1201	06'0228	T=2.10
	3162208100			M		1	02'1201	06'0228	T=2.15
	3162208110			M		1	02'1201	06'0228	T=2.20
	3162208120			M		1	02'1201	06'0228	T=2.25
	3162208130			M		1	02'1201	06'0228	T=2.30
	[04]	*PIN*							
	3112208000			M		1	02'1201	06'0228	
	[05]	*SHAFT-REVERSE IDLER*							
	3152108000			M		1	02'1201	06'0228	
	[06]	*PIN-SPRING*							
	001481003017			M		1	02'1201	05'0726	3X6, PIN TYPE
N	3126408000			M		1	05'0727	06'0228	5MM, BALL TYPE
	[07]	*BEARING-RVS IDLER NEEDLE*							
	3168308000			M		1	02'1201	06'0228	
	[08]	*PIN-DOWEL*							
	3152608000			M		2	02'1201	06'0228	
	[09]	*GEAR-REVERSE IDLER*							
	3127308000			M		1	02'1201	06'0228	
	[10]	*SPACER-REVERSE IDLER*							
	3152308000			M		1	02'1201	06'0228	

3174 ADAPTOR ASSY-TSM54(M/T,4WD)

ITC	KEY NO. PART NO	PART NAME OPTION	L/R	T/M	DRV	MODEL 662LA									EFF. DATE FROM	EFF. DATE TO	REMARK
	[11] 3152408000	*BRKT-IDLER SHAFT*		M		1									02'1201	06'0228	
	[12] 916270825D	*BOLT-FLANGE*		M		3									02'1201	06'0228	M8X1.25
	[13] 3152508000	*NUT*		M		1									02'1201	06'0228	

3175 RAIL & SHIFT FORK-TSM54(M/T,4WD)

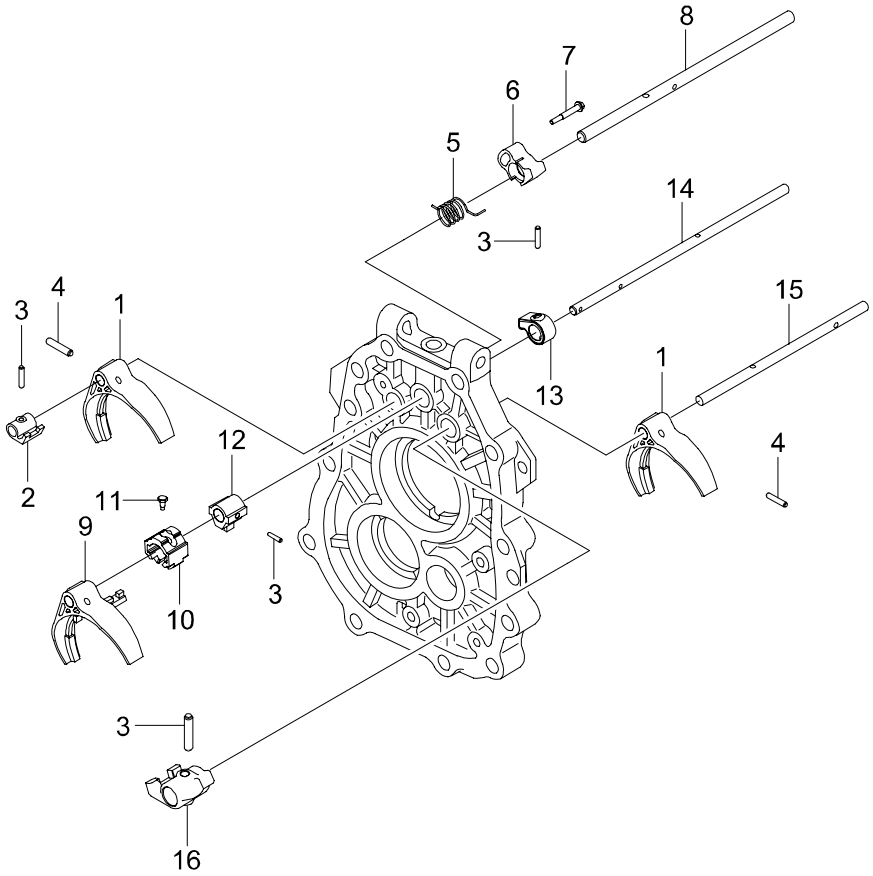

3175 RAIL & SHIFT FORK-TSM54(M/T,4WD)

ITC	KEY NO. PART NO	PART NAME OPTION	L/R	T/M	DRV	MODEL 662LA									EFF. DATE FROM	EFF. DATE TO	REMARK
	[01] 3177208000	*FORK-SHIFT*		M		2									02'1201	06'0228	
	[02] 3177308000	*LUG-SHIFT 1ST & 2ND*		M		1									02'1201	06'0228	
	[03] 9532406256	*PIN-SPRING*		M		4									02'1201	06'0228	M6
	[04] 9532406286	*PIN-SPRING*		M		2									02'1201	06'0228	M6
	[05] 3174408000	*SPRING-REVERSE LOCK*		M		1									02'1201	06'0228	
	[06] 3174208000	*PLATE-REVERSE LOCK*		M		1									02'1201	06'0228	
	[07] 3174308000	*BOLT*		M		1									02'1201	06'0228	
	[08] 3177108000	*RAIL-SHIFT*		M		1									02'1201	06'0228	
	[09] 3172208000	*FORK ASSY-SHIFT 3TH & 4TH*		M		1									02'1201	06'0228	
	[10] 3172508000	*PLATE-INTERLOCK*		M		1									02'1201	06'0228	
	[11] 3176108000	*BOLT-INTERLOCK*		M		1									02'1201	06'0228	
	[12] 3172408000	*LEVER-INR SHIFT*		M		1									02'1201	06'0228	
	[13] 3174108000	*PLATE-STOPPER*		M		1									02'1201	06'0228	
	[14] 3172108000	*RAIL-SHIFT*		M		1									02'1201	06'0228	
	[15] 3178108000	*RAIL-SHIFT*		M		1									02'1201	06'0228	

3175 RAIL & SHIFT FORK-TSM54(M/T,4WD)

ITC	KEY NO. PART NO	PART NAME OPTION	L/R	T/M	DRV	MODEL 662LA									EFF. DATE FROM	EFF. DATE TO	REMARK
	[16] 3178308000	*LUG-SHIFT 5TH & REV*		M		1									02'1201	06'0228	

3176 SHIFTER & EXTENSION-TSM54(M/T,4WD)

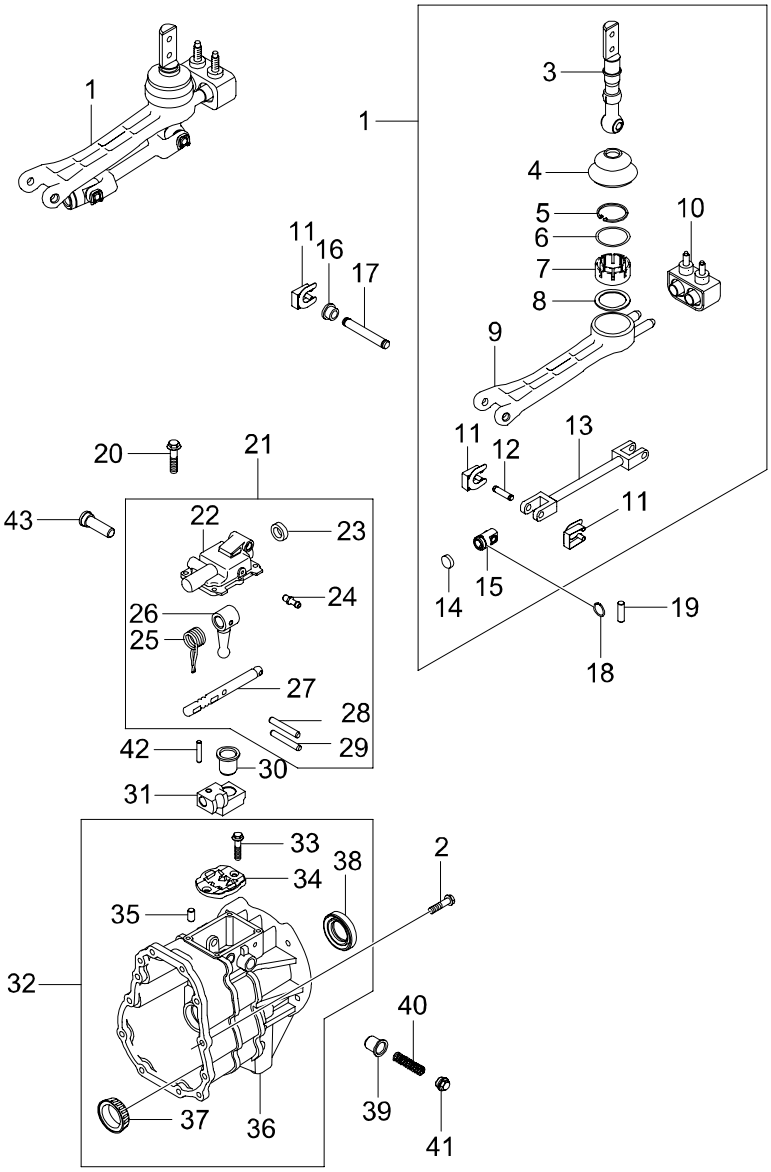

3176 SHIFTER & EXTENSION-TSM54(M/T,4WD)

ITC	KEY NO. PART NO	PART NAME OPTION	L/R	T/M	DRV	MODEL 662LA	EFF. DATE FROM	EFF. DATE TO	REMARK
	[01] 3183008000	*LEVER ASSY-SEMI REMOTE*		M		1	02'1201	05'0313	JOINT ROD MTG TYPE:VERTICAL HOLE
N	3183008012			M		1	05'0314	06'0228	JOINT ROD MTG TYPE:HORIZONTAL HOLE
	[02] 916281060D	*BOLT-FLANGE*		M		10	02'1201	06'0228	M10X1.5
	[03] 3184108000	*LEVER ASSY-SHIFT*		M		1	02'1201	06'0228	
	[04] 3184508000	*BOOT-RUBBER*		M		1	02'1201	06'0228	
	[05] 3184408000	*RING-RETAINING*		M		1	02'1201	06'0228	
	[06] 3184308000	*RING-O*		M		1	02'1201	06'0228	
	[07] 3184208000	*BEARING*		M		1	02'1201	06'0228	
	[08] 3184008000	*SHIM*		M		1	02'1201	06'0228	
	[09] 3183808000	*ARM-CONTROL HOUSING*		M		1	02'1201	06'0228	
	[10] 3183908000	*DAMPER ASSY*		M		1	02'1201	06'0228	
	[11] 3183308000	*WASHER-LOCK*		M		4	02'1201	06'0228	
	[12] 3184908000	*SHAFT-EXTEND*		M		2	02'1201	06'0228	
	[13] 3184608000	*ROD-EXTEND*		M		1	02'1201	06'0228	
	[14] 3184808000	*DISC*		M		1	02'1201	06'0228	

3176 SHIFTER & EXTENSION-TSM54(M/T,4WD)

ITC	KEY NO. PART NO	PART NAME OPTION	L/R	T/M	DRV	MODEL 662LA	EFF. DATE FROM	EFF. DATE TO	REMARK
	[15] 3184708000	*ROD ASSY-JOINT*		M		1	02'1201	06'0228	
	[16] 3183108000	*BUSH-T.G.S*		M		2	02'1201	06'0228	
	[17] 3183208000	*PIN*		M		1	02'1201	06'0228	
	[18] 3183508000	*RING-RETAIN*		M		1	02'1201	06'0228	
	[19] 3183408000	*PIN-JOINT*		M		1	02'1201	06'0228	
	[20] 916270820D	*BOLT*		M		4	02'1201	06'0228	M8X1.25
	[21] 3181008000	*COVER ASSY-TOP*		M		1	02'1201	05'0313	
N	3181008052			M		1	05'0314	06'0228	
	[22] 3181108000	*COVER-TOP*		M		1	02'1201	05'0313	
N	3181121001			M		1	05'0314	06'0228	
	[23] 3164308000	*SEAL-OIL CONTROL*		M		1	02'1201	06'0228	
	[24] 3181508000	*VENT-AIR*		M		1	02'1201	06'0228	
	[25] 3181408000	*SPRING-RETURN*		M		1	02'1201	06'0228	
	[26] 3181308000	*LEVER-SHIFT*		M		1	02'1201	06'0228	
	[27] 3181208000	*SHAFT-SHIFT*		M		1	02'1201	05'0313	
N	3181208012			M		1	05'0314		
	[28] 3181608000	*PIN-SPRING*		M		1	02'1201	06'0228	

3176 SHIFTER & EXTENSION-TSM54(M/T,4WD)

ITC	KEY NO. PART NO	PART NAME OPTION	L/R	T/M	DRV	MODEL 662LA									EFF. DATE FROM	EFF. DATE TO	REMARK
	[29] 3181708000	*PIN-SPRING*		M		1									02'1201	06'0228	
	[30] 3175208000	*BUSH-OFFSET LEVER*		M		1									02'1201	06'0228	
	[31] 3175408000	*LEVER-OFFSET CONTROL*		M		1									02'1201	06'0228	
	[32] 3113008000	*HOUSING ASSY-EXTENSION*		M		1									02'1201	06'0228	
	[33] 000963006046	*SCREW-COUNTER SUNK*		M		2									02'1201	06'0228	M6X4.8
	[34] 3175308000	*PLATE-OFFSET*		M		1									02'1201	06'0228	
	[35] 3152608000	*PIN-DOWEL*		M		2									02'1201	06'0228	
	[36] 3113108000	*HOUSING-EXTENSION*		M		1									02'1201	06'0228	
	[37] 3154008000	*BEARING ASSY-COUNTER ROLLER*		M		1									02'1201	06'0228	
	[38] 3164208000	*SEAL-OUTPUT OIL*		M		1									02'1201	06'0228	41 * 62 * 11
	[39] 3182308000	*PLUNGER-ROLLING*		M		2									02'1201	06'0228	
	[40] 3182108000	*SPRING-RETURN*		M		2									02'1201	06'0228	
	[41] 3182208000	*PLUG-SPRING*		M		2									02'1201	06'0228	
	[42] 9532406256	*PIN-SPRING*		M		1									02'1201	06'0228	M6
	[43] 3176208000	*PIN-DETENT*		M		1									02'1201	06'0228	

3180 TRANSMISSION-TSM52(M/T,2WD)

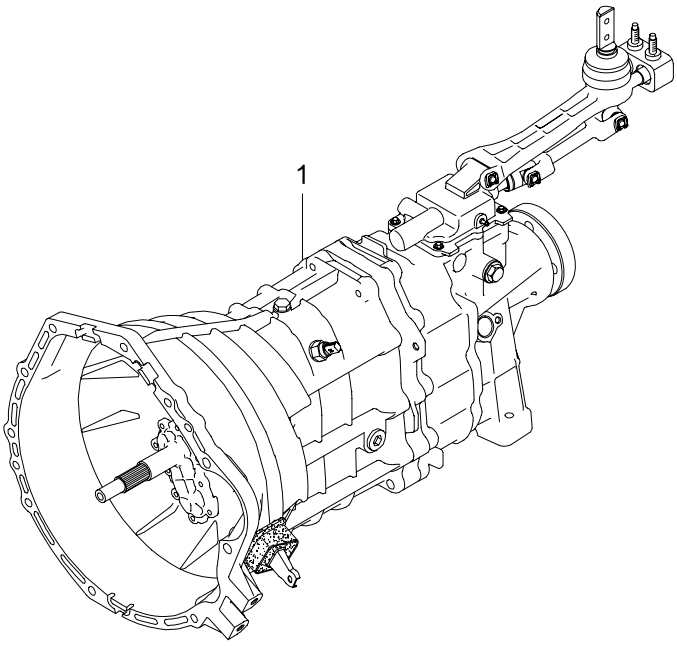

3180 TRANSMISSION-TSM52(M/T,2WD)

ITC	KEY NO. PART NO	PART NAME OPTION	L/R	T/M	DRV	MODEL 662LA									EFF. DATE FROM	EFF. DATE TO	REMARK
	[01]	*T/M ASSY*															
	3101008020			M		1									02'1201	03'0307	
N	3101008021			M		1									03'0308	03'1231	
	3101008053	2WD,DMF,FORK TYPE		M		1									04'0212	05'0313	2004 M/Y
O	3101008054	2WD,DMF,FORK TYPE		M		1									05'0314	05'0726	
O	3101008055	2WD,DMF,FORK TYPE		M		1									05'0727	06'0228	

3181 CLUTCH HOUSING-TSM52(M/T,2WD)

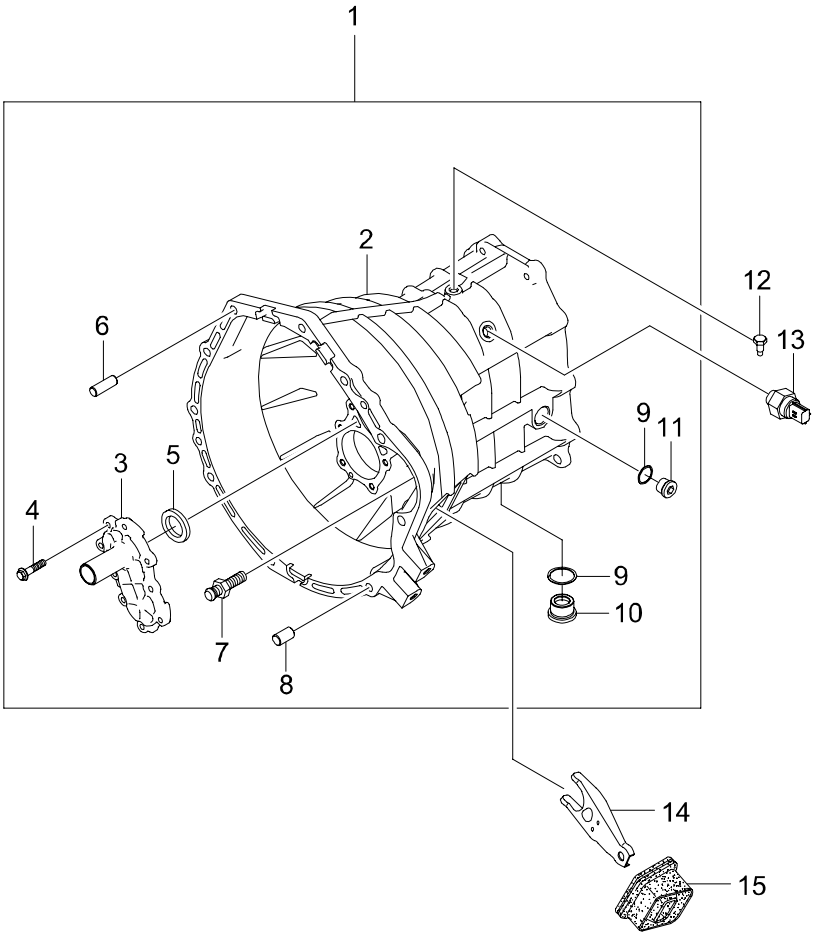

3181 CLUTCH HOUSING-TSM52(M/T,2WD)

ITC	KEY NO. PART NO	PART NAME OPTION	L/R	T/M	DRV	MODEL 662LA									EFF. DATE FROM	EFF. DATE TO	REMARK
	[01] 3111008000	*HOUSING ASSY-T/M*		M		1									02'1201	06'0228	
	[02] 3111108000	*HOUSING-T/M*		M		1									02'1201	06'0228	
	[03] 3163208000	*COVER-FRONT FORK*		M		1									02'1201	06'0228	
	[04] 916270825D	*BOLT-FLANGE*		M		9									02'1201	06'0228	M8X1.25
	[05] 3164108000	*SEAL-INPUT OIL*		M		1									02'1201	06'0228	
	[06] 9538410200	*PIN*		M		2									02'1201	06'0228	M10
	[07] 3033105001	*PIVOT-CLUTCH RELEASE FORK*		M		1									02'1201	06'0228	
	[08] 3152608000	*PIN-DOWEL*		M		2									02'1201	06'0228	
	[09] 007603024105	*RING-SEAL*		M		2									02'1201	06'0228	
	[10] 3111208000	*PLUG-OIL DRAIN*		M		1									02'1201	06'0228	
	[11] 3111308000	*PLUG-OIL FILLER*		M		1									02'1201	06'0228	
	[12] 3176108000	*BOLT-INTERLOCK*		M		1									02'1201	06'0228	
	[13] 3111508000	*SWITCH ASSY-BACK LIGHT*		M		1									02'1201	06'0228	
	[14]	*FORK ASSY-CLUTCH RELEASE*															
	3034005001	SMF		M		1									02'1201	06'0228	
	3034005321	DMF		M		1									04'0212	06'0228	

3181 CLUTCH HOUSING-TSM52(M/T,2WD)

ITC	KEY NO. PART NO	PART NAME OPTION	L/R	T/M	DRV	MODEL 662LA									EFF. DATE FROM	EFF. DATE TO	REMARK
	[15] 3035105010	*BOOT-CLUTCH RELEASE FORK*		M		1									02'1201	06'0228	

3182 INPUT & OUTPUT SHAFT-TSM52(M/T,2WD)

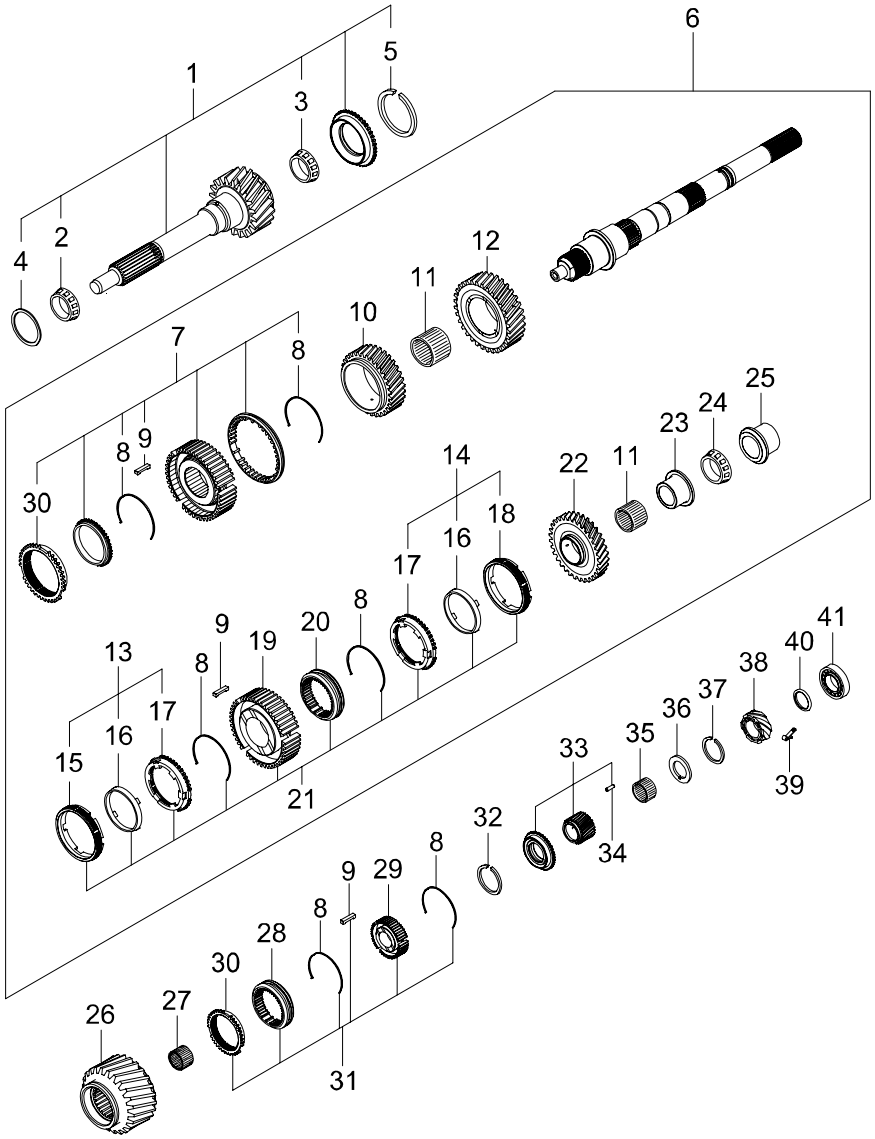

3182 - 01

3182 INPUT & OUTPUT SHAFT-TSM52(M/T,2WD)

ITC	KEY NO. PART NO	PART NAME OPTION	L/R	T/M	DRV	MODEL 662LA									EFF. DATE FROM	EFF. DATE TO	REMARK
	[01]	*SHAFT ASSY-INPUT*															
	3120008000	SMF		M		1									02'1201	06'0228	SUB PART APPLY :ORDER BY 3121008000 + KEY NO(2,3,4,5)
	3141108000	DMF		M		1									03'1226	05'1231	2004 M/Y, ORDER BY 3140008022
	[02]	*BEARING-TAPER ROLLER MAIN*															
	3165008000			M		1									02'1201	06'0228	
	[03]	*BEARING-TAPER ROLLER MIDDLE*															
	3166008000			M		1									02'1201	06'0228	
	[04]	*SPACER-INPUT*															
	3161108010			M		1									02'1201	06'0228	T=0.75
	3161108020			M		1									02'1201	06'0228	T=0.80
	3161108030			M		1									02'1201	06'0228	T=0.85
	3161108040			M		1									02'1201	06'0228	T=0.90
	3161108050			M		1									02'1201	06'0228	T=0.95
	3161108060			M		1									02'1201	06'0228	T=1.00
	3161108070			M		1									02'1201	06'0228	T=1.05
	3161108080			M		1									02'1201	06'0228	T=1.10
	3161108090			M		1									02'1201	06'0228	T=1.15
	3161108100			M		1									02'1201	06'0228	T=1.20
	3161108110			M		1									02'1201	06'0228	T=1.25
	3161108120			M		1									02'1201	06'0228	T=1.30
	3161108130			M		1									02'1201	06'0228	T=1.35
	3161108140			M		1									02'1201	06'0228	T=1.40
	3161108150			M		1									02'1201	06'0228	T=1.45
	[05]	*RING-RETAIN 3RD & 4TH*															
	3162108010			M		1									02'1201	06'0228	T=2.80
	3162108020			M		1									02'1201	06'0228	T=2.85
	3162108030			M		1									02'1201	06'0228	T=2.90
	3162108040			M		1									02'1201	06'0228	T=2.95
	[06]	*SHAFT ASSY-OUTPUT*															
	3142008000			M		1									02'1201	06'0228	
	[07]	*SYNCHRONIZER ASSY*															
	3132008000			M		1									02'1201	06'0228	
	[08]	*SPRING-SYNCHRONIZER*															
	3131308000			M		6									02'1201	06'0228	

3182 INPUT & OUTPUT SHAFT-TSM52(M/T,2WD)

ITC	KEY NO. PART NO	PART NAME OPTION	L/R	T/M	DRV	MODEL 662LA									EFF. DATE FROM	EFF. DATE TO	REMARK
	[09] 3131408000	*KEY-SYNCHRO*		M		9									02'1201	06'0228	
	[10] 3125008000	*GEAR ASSY-3RD*		M		1									02'1201	06'0228	
	[11] 3168408001	*BEARING-NEEDLE*		M		2									02'1201	06'0228	
	[12] 3124008000	*GEAR ASSY-2ND*		M		1									02'1201	06'0228	
	[13] 3134008000	*CONE ASSY-DOUBLE 1ST*		M		1									02'1201	06'0228	
	[14] 3134008100	*CONE ASSY-DOUBLE 2ND*		M		1									02'1201	06'0228	
	[15] 3134308000	*RING-SYNCHRO INNER*		M		1									02'1201	06'0228	
	[16] 3134208000	*CONE-SYNCHRO MID*		M		2									02'1201	06'0228	
	[17] 3134108000	*RING-SYNCHRO OTR*		M		2									02'1201	06'0228	
	[18] 3134108100	*RING-SYNCHRO OTR*		M		1									02'1201	06'0228	
	[19] 3131108000	*HUB-SYNCHRONIZER 1ST & 2ND*		M		1									02'1201	06'0228	
	[20] 3131208000	*SLEEVE-DOUBLE SYNCHRO*		M		1									02'1201	06'0228	
	[21] 3131008000	*SYNCHRONIZER ASSY*		M		1									02'1201	06'0228	
	[22] 3123008000	*GEAR ASSY-1ST*		M		1									02'1201	06'0228	
	[23] 3122408000	*RACE-INR 1ST*		M		1									02'1201	06'0228	

3182 INPUT & OUTPUT SHAFT-TSM52(M/T,2WD)

ITC	KEY NO. PART NO	PART NAME OPTION	L/R	T/M	DRV	MODEL 662LA									EFF. DATE FROM	EFF. DATE TO	REMARK
	[24]	*BEARING-TAPER ROLLER MAIN*															
	3165008000			M		1									02'1201	06'0228	
	[25]	*RACE-REVERSE INR*															
	3122308000			M		1									02'1201	06'0228	
	[26]	*GEAR ASSY-REVERSE*															
	3127008000			M		1									02'1201	06'0228	
	[27]	*BEARING-RVS IDLER NEEDLE*															
	3168108000			M		1									02'1201	06'0228	
	[28]	*SLEEVE-SINGLE SYNCHRO*															
	3132208000			M		1									02'1201	06'0228	
	[29]	*HUB-SYNCHRO 5TH & REV*															
	3133108000			M		1									02'1201	06'0228	
	[30]	*RING-SYNCHRO OTR*															
	3132308000			M		2									02'1201	06'0228	
	[31]	*SYNCHRONIZER ASSY*															
	3133008000			M		1									02'1201	06'0228	
	[32]	*RING-RETAIN 5TH & REV*															
	3162308010			M		1									02'1201	06'0228	T=2.55
	3162308020			M		1									02'1201	06'0228	T=2.60
	3162308030			M		1									02'1201	06'0228	T=2.65
	3162308040			M		1									02'1201	06'0228	T=2.75
	3162308050			M		1									02'1201	06'0228	T=2.75
	3162308060			M		1									02'1201	06'0228	T=2.80
	3162308070			M		1									02'1201	06'0228	T=2.90
	3162308080			M		1									02'1201	06'0228	T=2.95
	3162308090			M		1									02'1201	06'0228	T=3.00
	3162308100			M		1									02'1201	06'0228	T=2.55
	[33]	*GEAR ASSY-5TH*															
	3126008000			M		1									02'1201	06'0228	
	[34]	*PIN-SPRING*															
	001481003017			M		1									02'1201	05'0726	3X6, PIN TYPE
N	3126408000			M		1									05'0727	06'0228	5MM, BALL TYPE

3182 INPUT & OUTPUT SHAFT-TSM52(M/T,2WD)

ITC	KEY NO. PART NO	PART NAME OPTION	L/R	T/M	DRV	MODEL 662LA	EFF. DATE FROM	EFF. DATE TO	REMARK
	[35]	*BEARING-5TH NEEDLE*							
	3168208000			M		1	02'1201	06'0228	
	[36]	*WASHER-THRUST*							
	3153008010			M		1	02'1201	06'0228	T=5.00
	3153008020			M		1	02'1201	06'0228	T=4.98
	3153008030			M		1	02'1201	06'0228	T=4.96
	3153008040			M		1	02'1201	06'0228	T=4.94
	3153008050			M		1	05'0727	06'0228	T=5.5
	[37]	*RING-RETAIN 5TH O/S*							
	3162508010			M		1	02'1201	06'0228	T=2.50
	3162508020			M		1	02'1201	06'0228	T=2.55
	3162508030			M		1	02'1201	06'0228	T=2.60
	3162508040			M		1	02'1201	06'0228	T=2.65
	3162508050			M		1	02'1201	06'0228	T=2.70
	3162508060			M		1	02'1201	06'0228	T=2.75
	3162508070			M		1	02'1201	06'0228	T=2.80
	3162508080			M		1	02'1201	06'0228	T=2.85
	3162508090			M		1	02'1201	06'0228	T=2.90
	3162508100			M		1	02'1201	06'0228	T=2.95
	3162508110			M		1	02'1201	06'0228	T=3.00
	3162508120			M		1	02'1201	06'0228	T=3.05
	3162508130			M		1	02'1201	06'0228	T=3.10
	3162508140			M		1	02'1201	06'0228	T=3.15
	3162508150			M		1	02'1201	06'0228	T=3.20
	[38]	*GEAR-SPEEDO METER DRIVE*							
	3128108000			M		1	02'1201	06'0228	
	[39]	*CRIP*							
	3178208000			M		1	02'1201	06'0228	
	[40]	*WASHER*							
	3153208010			M		1	02'1201	06'0228	
	[41]	*BEARING-BALL*							
	3168608000			M		1	02'1201	06'0228	

3183 COUNT SHAFT GEAR-TSM52(M/T,2WD)

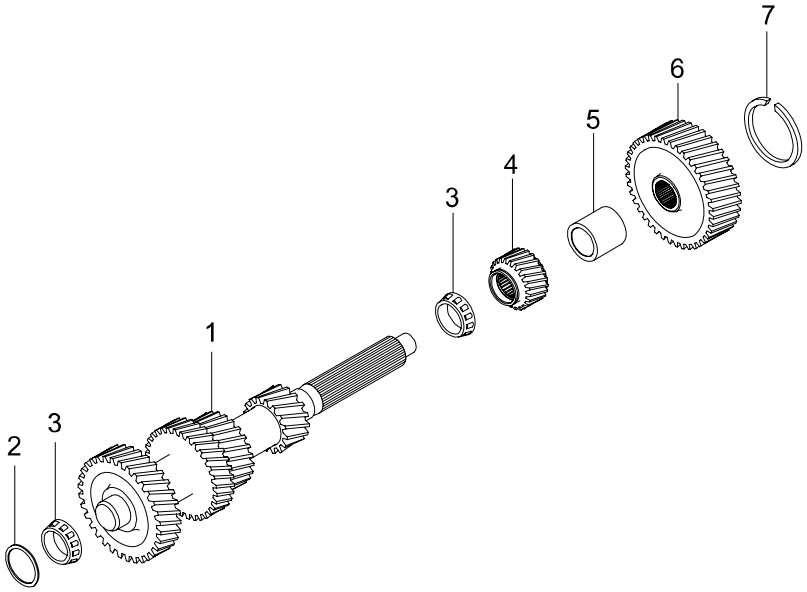

3183 COUNT SHAFT GEAR-TSM52(M/T,2WD)

ITC	KEY NO. PART NO	PART NAME OPTION	L/R	T/M	DRV	MODEL 662LA	EFF. DATE FROM	EFF. DATE TO	REMARK
	[01]	*SHAFT ASSY-COUNTER*							
	3151008000			M		1	02'1201	06'0228	SNAP RING TYPE, GEAR TEETH: 1(14), 2(23), 3(30), 4(34)
N	3151008002			M		1	04'0212	06'0228	LOCK NUT TYPE, GEAR TEETH: 1(14), 2(23), 3(30), 4(34)
	[02]	*SPACER-COUNTER*							
	3161208010			M		1	02'1201	06'0228	T=0.40
	3161208020			M		1	02'1201	06'0228	T=1.15
	3161208030			M		1	02'1201	06'0228	T=1.20
	3161208040			M		1	02'1201	06'0228	T=1.25
	3161208050			M		1	02'1201	06'0228	T=1.30
	3161208060			M		1	02'1201	06'0228	T=1.35
	3161208070			M		1	02'1201	06'0228	T=1.40
	3161208080			M		1	02'1201	06'0228	T=1.45
	3161208090			M		1	02'1201	06'0228	T=1.50
	3161208100			M		1	02'1201	06'0228	T=1.55
	[03]	*BEARING ASSY-COUNTER TAPER ROLLER*							
	3167008000			M		2	02'1201	06'0228	
	[04]	*GEAR-COUNTER RVS*							
	3127208000			M		1	02'1201	06'0228	
	[05]	*BUSH-COUNTER SHAFT*							
	3183708000			M		1	02'1201	06'0228	
	[06]	*GEAR-COUNTER 5TH*							
	3126308000			M		1	02'1201	06'0228	53T
	[07]	*RING-RETAIN 5TH COUNTER SHAFT*							
	3162408010			M		1	02'1201	06'0228	T=2.45
	3162408020			M		1	02'1201	06'0228	T=2.50
	3162408030			M		1	02'1201	06'0228	T=2.60
	3162408040			M		1	02'1201	06'0228	T=2.65
	3162408050			M		1	02'1201	06'0228	T=2.65
	3162408060			M		1	02'1201	06'0228	T=2.70
	3162408070			M		1	02'1201	06'0228	T=2.75
	3162408080			M		1	02'1201	06'0228	T=2.80
	3162408090			M		1	02'1201	06'0228	T=2.85
	3162408100			M		1	02'1201	06'0228	T=2.90
	3162408110			M		1	02'1201	06'0228	T=2.95

3184 ADAPTOR ASSY-TSM52(M/T,2WD)

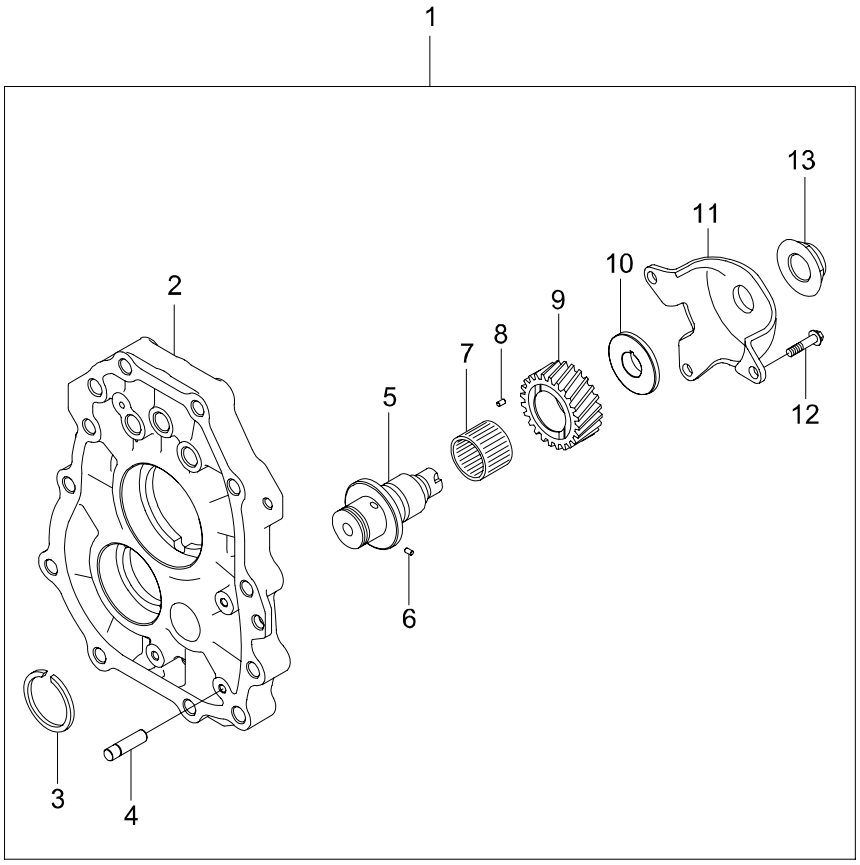

3184 ADAPTOR ASSY-TSM52(M/T,2WD)

ITC	KEY NO. PART NO	PART NAME OPTION	L/R	T/M	DRV	MODEL 662LA	EFF. DATE FROM	EFF. DATE TO	REMARK
	[01] 3112008000	*ADAPTOR ASSY-T/M*		M		1	02'1201	06'0228	
	[02] 3112108000	*ADAPTOR-T/M*		M		1	02'1201	06'0228	
	[03] 3162208010	*RING-RETAIN RVS IDLER*		M		1	02'1201	06'0228	T=1.70
	3162208020			M		1	02'1201	06'0228	T=1.75
	3162208030			M		1	02'1201	06'0228	T=1.80
	3162208040			M		1	02'1201	06'0228	T=1.85
	3162208050			M		1	02'1201	06'0228	T=1.90
	3162208060			M		1	02'1201	06'0228	T=1.95
	3162208070			M		1	02'1201	06'0228	T=2.00
	3162208080			M		1	02'1201	06'0228	T=2.05
	3162208090			M		1	02'1201	06'0228	T=2.10
	3162208100			M		1	02'1201	06'0228	T=2.15
	3162208110			M		1	02'1201	06'0228	T=2.20
	3162208120			M		1	02'1201	06'0228	T=2.25
	3162208130			M		1	02'1201	06'0228	T=2.30
	[04] 3112208000	*PIN*		M		1	02'1201	06'0228	
	[05] 3152108000	*SHAFT-REVERSE IDLER*		M		1	02'1201	06'0228	
	[06] 001481003017	*PIN-SPRING*		M		1	02'1201	05'0726	3X6, PIN TYPE
N	3126408000			M		1	05'0727	06'0228	5MM, BALL TYPE
	[07] 3168308000	*BEARING-RVS IDLER NEEDLE*		M		1	02'1201	06'0228	
	[08] 3152608000	*PIN-DOWEL*		M		2	02'1201	06'0228	
	[09] 3127308000	*GEAR-REVERSE IDLER*		M		1	02'1201	06'0228	
	[10] 3152308000	*SPACER-REVERSE IDLER*		M		1	02'1201	06'0228	

3184 ADAPTOR ASSY-TSM52(M/T,2WD)

ITC	KEY NO. PART NO	PART NAME OPTION	L/R	T/M	DRV	MODEL 662LA									EFF. DATE FROM	EFF. DATE TO	REMARK
	[11] 3152408000	*BRKT-IDLER SHAFT*		M		1									02'1201	06'0228	
	[12] 916270825D	*BOLT-FLANGE*		M		3									02'1201	06'0228	M8X1.25
	[13] 3152508000	*NUT*		M		1									02'1201	06'0228	

3185 RAIL & SHIFT FORK-TSM52(M/T,2WD)

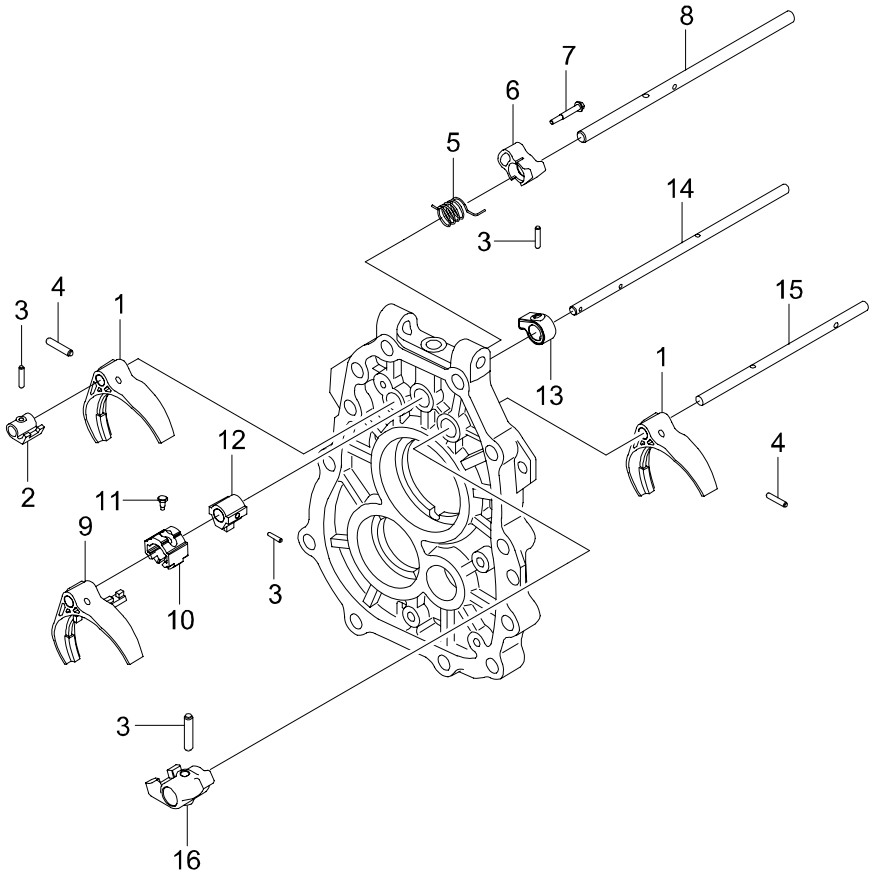

3185 RAIL & SHIFT FORK-TSM52(M/T,2WD)

ITC	KEY NO. PART NO	PART NAME OPTION	L/R	T/M	DRV	MODEL 662LA									EFF. DATE FROM	EFF. DATE TO	REMARK
	[01] 3177208000	*FORK-SHIFT*		M		2									02'1201	06'0228	
	[02] 3177308000	*LUG-SHIFT 1ST & 2ND*		M		1									02'1201	06'0228	
	[03] 9532406256	*PIN-SPRING*		M		4									02'1201	06'0228	M6
	[04] 9532406286	*PIN-SPRING*		M		2									02'1201	06'0228	M6
	[05] 3174408000	*SPRING-REVERSE LOCK*		M		1									02'1201	06'0228	
	[06] 3174208000	*PLATE-REVERSE LOCK*		M		1									02'1201	06'0228	
	[07] 3174308000	*BOLT*		M		1									02'1201	06'0228	
	[08] 3177108000	*RAIL-SHIFT*		M		1									02'1201	06'0228	
	[09] 3172208000	*FORK ASSY-SHIFT 3TH & 4TH*		M		1									02'1201	06'0228	
	[10] 3172508000	*PLATE-INTERLOCK*		M		1									02'1201	06'0228	
	[11] 3176108000	*BOLT-INTERLOCK*		M		1									02'1201	06'0228	
	[12] 3172408000	*LEVER-INR SHIFT*		M		1									02'1201	06'0228	
	[13] 3174108000	*PLATE-STOPPER*		M		1									02'1201	06'0228	
	[14] 3172108000	*RAIL-SHIFT*		M		1									02'1201	06'0228	
	[15] 3178108000	*RAIL-SHIFT*		M		1									02'1201	06'0228	

3185 RAIL & SHIFT FORK-TSM52(M/T,2WD)

ITC	KEY NO. PART NO	PART NAME OPTION	L/R	T/M	DRV	MODEL 662LA									EFF. DATE FROM	EFF. DATE TO	REMARK
	[16] 3178308000	*LUG-SHIFT 5TH & REV*		M		1									02'1201	06'0228	

3186 SHIFT & EXTENSION-TSM52(M/T,2WD)

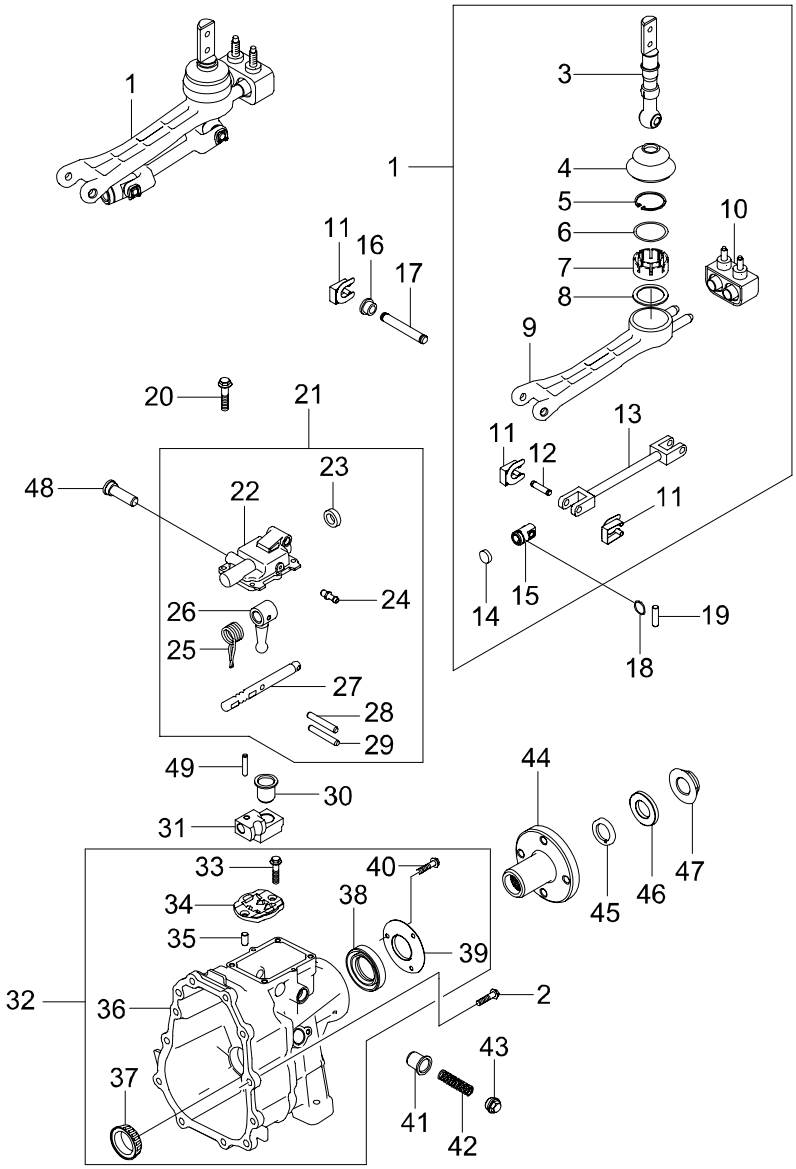

3186 SHIFT & EXTENSION-TSM52(M/T,2WD)

ITC	KEY NO. PART NO	PART NAME OPTION	L/R	T/M	DRV	MODEL 662LA	EFF. DATE FROM	EFF. DATE TO	REMARK
	[01]	*LEVER ASSY-SEMI REMOTE*							
	3183008000			M		1	02'1201	05'0313	JOINT ROD MTG TYPE:VERTICAL HOLE
N	3183008012			M		1	05'0314	06'0228	JOINT ROD MTG TYPE:HORIZONTAL HOLE
	[02]	*BOLT-FLANGE*							
	916281060D			M		10	02'1201	06'0228	M10X1.5
	[03]	*LEVER ASSY-SHIFT*							
	3184108000			M		1	02'1201	06'0228	
	[04]	*BOOT-RUBBER*							
	3184508000			M		1	02'1201	06'0228	
	[05]	*RING-RETAINING*							
	3184408000			M		1	02'1201	06'0228	
	[06]	*RING-O*							
	3184308000			M		1	02'1201	06'0228	
	[07]	*BEARING*							
	3184208000			M		1	02'1201	06'0228	
	[08]	*SHIM*							
	3184008000			M		1	02'1201	06'0228	
	[09]	*ARM-CONTROL HOUSING*							
	3183808000			M		1	02'1201	06'0228	
	[10]	*DAMPER ASSY*							
	3183908000			M		1	02'1201	06'0228	
	[11]	*WASHER-LOCK*							
	3183308000			M		4	02'1201	06'0228	
	[12]	*SHAFT-EXTEND*							
	3184908000			M		2	02'1201	06'0228	
	[13]	*ROD-EXTEND*							
	3184608000			M		1	02'1201	06'0228	
	[14]	*DISC*							
	3184808000			M		1	02'1201	06'0228	

3186 SHIFT & EXTENSION-TSM52(M/T,2WD)

ITC	KEY NO. PART NO	PART NAME OPTION	L/R	T/M	DRV	MODEL 662LA									EFF. DATE FROM	EFF. DATE TO	REMARK
	[15] 3184708000	*ROD ASSY-JOINT*		M		1									02'1201	06'0228	
	[16] 3183108000	*BUSH-T.G.S*		M		2									02'1201	06'0228	
	[17] 3183208000	*PIN*		M		1									02'1201	06'0228	
	[18] 3183508000	*RING-RETAIN*		M		1									02'1201	06'0228	
	[19] 3183408000	*PIN-JOINT*		M		1									02'1201	06'0228	
	[20] 916270820D	*BOLT-FLANGE*		M		4									02'0901	06'0228	
	[21] 3181008000	*COVER ASSY-TOP*		M		1									02'1201	05'0313	
	[22] 3181108000	*COVER-TOP*		M		1									02'1201	05'0313	
	[23] 3164308000	*SEAL-OIL CONTROL*		M		1									02'1201	06'0228	
	[24] 3181508000	*VENT-AIR*		M		1									02'1201	06'0228	
	[25] 3181408000	*SPRING-RETURN*		M		1									02'1201	06'0228	
	[26] 3181308000	*LEVER-SHIFT*		M		1									02'1201	06'0228	
	[27] 3181208000	*SHAFT-SHIFT*		M		1									02'1201	06'0228	
	[28] 3181608000	*PIN-SPRING*		M		1									02'1201	06'0228	
	[29] 3181708000	*PIN-SPRING*		M		1									02'1201	06'0228	

3186 SHIFT & EXTENSION-TSM52(M/T,2WD)

ITC	KEY NO. PART NO	PART NAME OPTION	L/R	T/M	DRV	MODEL 662LA									EFF. DATE FROM	EFF. DATE TO	REMARK
	[30] 3175208000	*BUSH-OFFSET LEVER*		M		1									02'1201	06'0228	
	[31] 3175408000	*LEVER-OFFSET CONTROL*		M		1									02'1201	06'0228	
	[32] 3114008000	*HOUSING ASSY-EXTENSION*		M		1									02'1201	06'0228	
	[33] 000963006046	*SCREW-COUNTER SUNK*		M		2									02'1201	06'0228	M6X4.8
	[34] 3175308000	*PLATE-OFFSET*		M		1									02'1201	06'0228	
	[35] 3152608000	*PIN-DOWEL*		M		2									02'1201	06'0228	
	[36] 3114108000	*HOUSING-EXTENTION*		M		1									02'1201	06'0228	
	[37] 3154008000	*BEARING ASSY-COUNTER ROLLER*		M		1									02'1201	06'0228	
	[38] 3164208000	*SEAL-OUTPUT OIL*		M		1									02'1201	06'0228	41 * 62 * 11
	[39] 3153108000	*BRKT-RR COVER*		M		1									02'1201	06'0228	
	[40] 9101406161	*BOLT*		M		1									02'1201	06'0228	M6X1.0
	[41] 3182308000	*PLUNGER-ROLLING*		M		2									02'1201	06'0228	
	[42] 3182108000	*SPRING-RETURN*		M		2									02'1201	06'0228	
	[43] 3182208000	*PLUG-SPRING*		M		2									02'1201	06'0228	
	[44] 3152808000	*FLANGE-REAR*		M		1									02'1201	06'0228	

3186 SHIFT & EXTENSION-TSM52(M/T,2WD)

ITC	KEY NO. PART NO	PART NAME OPTION	L/R	T/M	DRV	MODEL 662LA									EFF. DATE FROM	EFF. DATE TO	REMARK
	[45] 3153008000	*SEAL-OIL RR*		M		1									02'1201	06'0228	
	[46] 3152908000	*WASHER*		M		1									02'1201	06'0228	
	[47] 3152708000	*NUT-LOCK*		M		1									02'1201	06'0228	
	[48] 3176208000	*PIN-DETENT*		M		1									02'1201	06'0228	
	[49] 9532406256	*PIN-SPRING*		M		1									02'1201	06'0228	M6

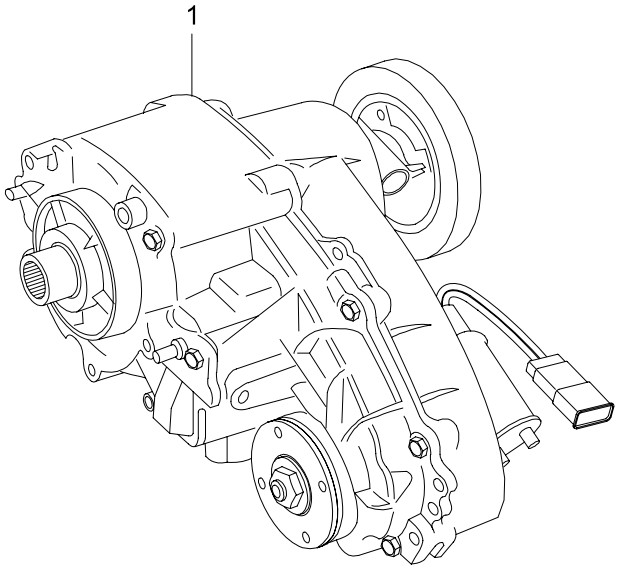
1

3210 TRANSFER CASE-PART TIME

ITC	KEY NO. PART NO	PART NAME OPTION	L/R	T/M	DRV	MODEL 662LA									EFF. DATE FROM	EFF. DATE TO	REMARK
	[01]	*T/C ASSY*															
	3200005003			M		1									02'1201	06'0228	4408E-6T
	3200005050			A		1									02'1201	06'0228	4408E-5T

3211 TRANSFER CASE-PART TIME(1)

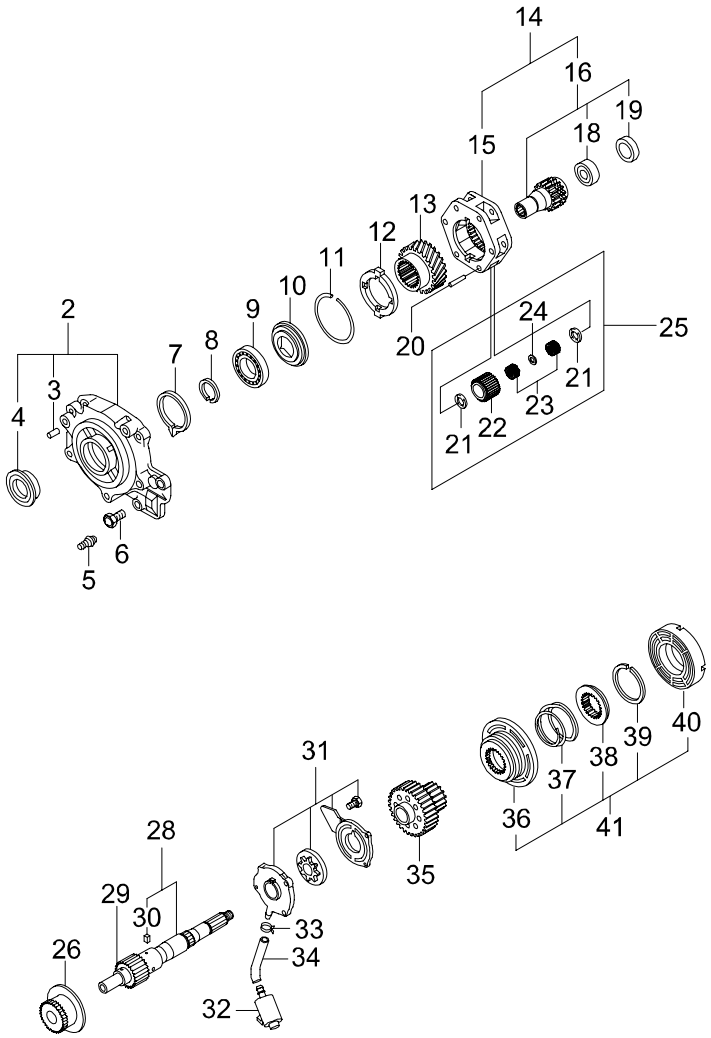

3211 TRANSFER CASE-PART TIME(1)

ITC	KEY NO. PART NO	PART NAME OPTION	L/R	T/M	DRV	MODEL 662LA									EFF. DATE FROM	EFF. DATE TO	REMARK
	[02] 1354.672.001	*ADAPTOR ASSY-FRT*				1									02'1201	06'0228	
	[03] 1000.043.017	*PIN-SPIROL*				1									02'1201	06'0228	
	[04] 1900.044.009	*SEAL-OIL*				1									02'1201	06'0228	
	[05] 1900.072.005	*BREATHER*				1									02'1201	06'0228	
	[06] 1900.183.010	*BOLT*				9									02'1201	06'0228	M10X1.5X31
	[07] 1000.139.039	*RING-SNAP*				1									02'1201	06'0228	
	[08] 1000.139.040	*RING-SNAP*				1									02'1201	06'0228	
	[09] 1000.130.011	*BEARING*				1									02'1201	06'0228	
	[10] 1350.193.001	*WASHER-PINION LOCK*				1									02'1201	06'0228	
	[11] 1000.139.043	*RING-RETAINING*				1									02'1201	06'0228	
	[12] 1350.014.001	*PLATE-THRUST*				1									02'1201	06'0228	
	[13] 1350.165.001	*GEAR-SUN*				1									02'1201	06'0228	
	[14] 1352.127.001	*ROLLER*				1									02'1201	06'0228	
	[15] 1354.659.001	*CARRIER ASSY*				1									02'1201	06'0228	
	[16] 1354.689.001	*SHAFT ASSY-INPUT*				1									02'1201	06'0228	

3211 TRANSFER CASE-PART TIME(1)

ITC	KEY NO. PART NO	PART NAME OPTION	L/R	T/M	DRV	MODEL 662LA									EFF. DATE FROM	EFF. DATE TO	REMARK
	[18] 1900.132.013	*BEARING*				1									02'1201	06'0228	
	[19] 1345.127.002	*BEARING-SLEEVE*				1									02'1201	06'0228	
	[20] 1350.042.001	*SHAFT-PINION*				6									02'1201	06'0228	
	[21] 1350.193.002	*WASHER-PINION LOCK*				12									02'1201	06'0228	
	[22] 1350.163.001	*GEAR-PINION*				6									02'1201	06'0228	
	[23] 1300.131.001	*ROLLER-NEEDLE*				0									02'1201	06'0228	
	[24] 1350.053.001	*SPACER-PINION*				1									02'1201	06'0228	
	[25] 1354.659.002	*CARRIER ASSY*				1									02'1201	06'0228	
	[26] 1354.089.002	*HUB-REDUCTION*				1									02'1201	06'0228	
	[28] 1354.671.010	*SHAFT ASSY-OUTPUT*				1									02'1201	06'0228	
	[29] 1354.171.010	*SHAFT-OUTPUT*				1									02'1201	06'0228	
	[30] 1900.043.004	*PIN-SPRING*				1									02'1201	06'0228	
	[31] 4400.508.001	*PUMP ASSY-GEROTOR*				1									02'1201	06'0228	
	[32] 1345.238.001	*FILTER ASSY*				1									02'1201	06'0228	
	[33] 1345.056.005	*CLAMP*				1									02'1201	06'0228	

3211 TRANSFER CASE-PART TIME(1)

I T C	KEY NO. PART NO	PART NAME OPTION	L / R	T / M	D R V	MODEL 662LA									EFF. DATE FROM	EFF. DATE TO	REMARK
	[34] 1350.034.002	*HOSE-COUPLING*				1									02'1201	06'0228	
	[35] 1354.144.002	*SPROCKET-DRIVE*				1									02'1201	06'0228	24T
	[36] 4400.055.001	*COLLAR-LOCK UP*				1									02'1201	06'0228	
	[37] 1350.156.007	*SPRING*				1									02'1201	06'0228	
	[38] 1900.089.001	*HUB-LOCKUP*				1									02'1201	06'0228	
	[39] 1000.139.041	*RING-SNAP*				1									02'1201	06'0228	
	[40] 1354.212.001	*HOUSING-CLUTCH*				1									02'1201	06'0228	
	[41] 1350.589.003	*LOCK UP ASSY*				1									02'1201	06'0228	PARTIAL SUPPLY: KEY NO(3211-36, 37, 38, 39, 40)

3212 TRANSFER CASE-PART TIME(2)

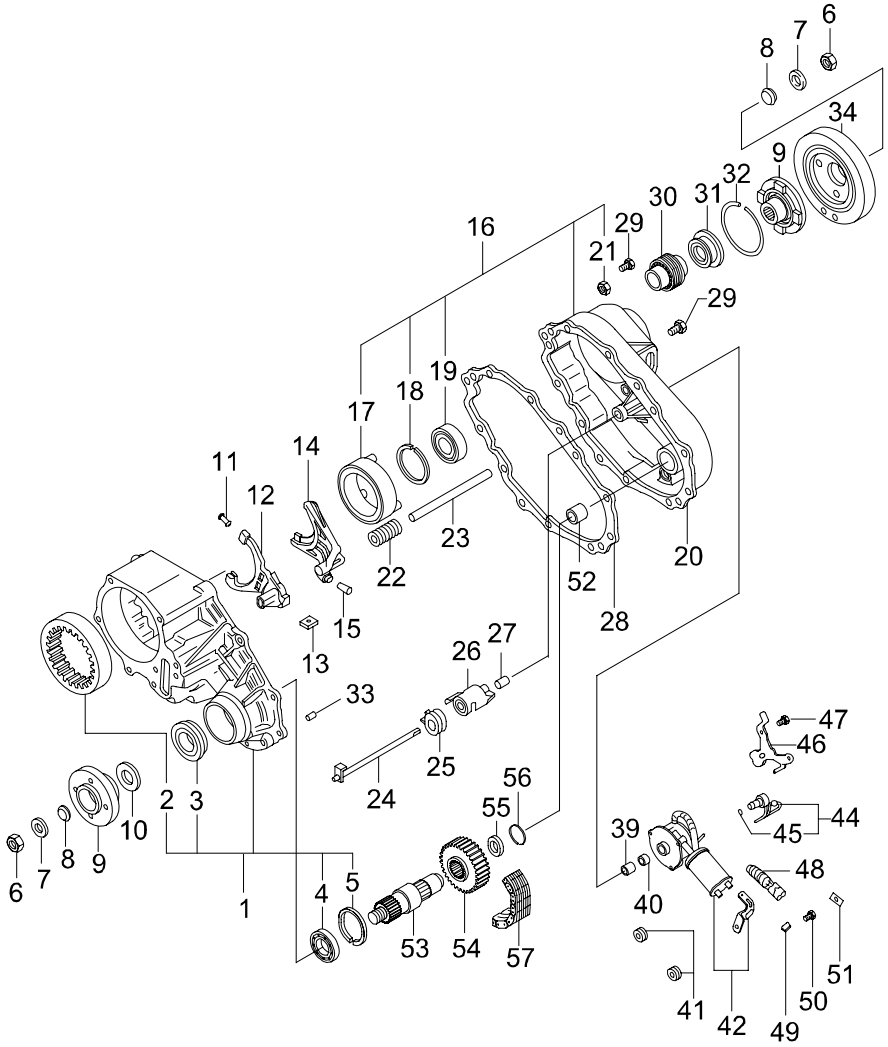

3212 TRANSFER CASE-PART TIME(2)

ITC	KEY NO. PART NO	PART NAME OPTION	L/R	T/M	DRV	MODEL 662LA	EFF. DATE FROM	EFF. DATE TO	REMARK
	[01] 1354.565.002	*CASE ASSY-TRANSFER*				1	02'1201	06'0228	
	[02] 1354.162.001	*GEAR-RING*				1	02'1201	06'0228	
	[03] 1900.044.009	*SEAL-OIL*				1	02'1201	06'0228	
	[04] 1000.130.008	*BEARING*				1	02'1201	06'0228	
	[05] 1900.139.063	*RING-SNAP*				1	02'1201	06'0228	
	[06] 1900.149.001	*NUT*				2	02'1201	06'0228	INSTEAD OF ITEM: 1900.149.014+1900.047.007
N	1900.149.014					2	03'0628	06'0228	
	[07] 1000.047.016	*WASHER*				2	02'1201	03'0627	
N	1900.047.007					2	03'0628	06'0228	
	[08] 1000.044.012	*SEAL-OIL*				2	02'1201	06'0228	
	[09] 1300.031.006	*FLANGE-COMPANION*				2	02'1201	06'0228	
	[10] 1900.053.002	*SPACER*				1	02'1201	06'0228	
	[11] 1356.235.001	*FACING-SHIFT FORK*				2	02'1201	06'0228	
	[12] 1354.596.001	*FORK ASSY-REDUCTION SHIFT*				1	02'1201	06'0228	
	[13] 1000.012.002	*MAGNET*				1	02'1201	06'0228	
	[14] 1354.096.003	*FORK*				1	02'1201	06'0228	

3212 TRANSFER CASE-PART TIME(2)

ITC	KEY NO. PART NO	PART NAME OPTION	L/R	T/M	DRV	MODEL 662LA									EFF. DATE FROM	EFF. DATE TO	REMARK
	[15] 4400.543.001	*PIN-ROLLER & RETAINER*				1									02'1201	06'0228	
	[16] 1354.539.002	*COVER ASSY*				1									02'1201	06'0228	
	[17] 4400.645.005	*COIL ASSY-CLUTCH*				1									02'1201	03'0512	
Y	4400.645.021					1									03'0513	06'0228	
	[18] 1900.139.063	*RING-SNAP*				1									02'1201	06'0228	
	[19] 1000.130.008	*BEARING*				1									02'1201	06'0228	
	[20] 1354.039.002	*COVER*				1									02'1201	06'0228	
	[21] 1300.149.002	*NUT*				1									02'1201	06'0228	
	[22] 4400.156.001	*SPRING-RETURN*				1									02'1201	06'0228	
	[23] 1350.100.001	*SHAFT-RAIL*				1									02'1201	06'0228	
	[24] 1354.122.002	*SHIFT-SHAFT*				1									02'1201	06'0228	
	[25] 1350.156.008	*SPRING-LOCKUP FORK*				1									02'1201	06'0228	
	[26] 1354.099.002	*CAM-ELECTRIC SHIFT*				1									02'1201	06'0228	
	[27] 1350.053.002	*SPACER*				1									02'1201	06'0228	
	[28] 0000000353	*GASKET*				1									02'1201	06'0228	
	[29] 1900.183.010	*BOLT*				15									02'1201	06'0228	M10X1.5X31

3212 TRANSFER CASE-PART TIME(2)

ITC	KEY NO. PART NO	PART NAME OPTION	L/R	T/M	DRV	MODEL 662LA	EFF. DATE FROM	EFF. DATE TO	REMARK
	[30]	*GEAR-SPEEDO*							
	1350.110.003			M		1	02'1201	06'0228	6T,RED
	1900.110.015			A		1	02'1201	06'0228	5T,BLUE
	[31]	*SEAL-OIL*							
	1900.044.009					1	02'1201	06'0228	
	[32]	*RING-SNAP*							
	1900.139.040					1	02'1201	06'0228	
	[33]	*PIN-DOWEL*							
	1900.043.008					1	02'1201	06'0228	
	[34]	*DAMPER ASSY-TORSIONAL*							
	3203006000					1	02'1201	06'0228	
	[39]	*BEARING-SLEEVE*							
	1300.127.002					1	02'1201	06'0228	
	[40]	*SEAL-OIL*							
	1300.044.001					1	02'1201	06'0228	
	[41]	*PLUG-PIPE*							
	1300.052.007					2	02'1201	06'0228	
	[42]	*MOTOR ASSY-T/C CONT*							
	4408.648.004					1	02'1201	03'0531	
Y	4408.648.005					1	03'0601	04'0819	
Y	4408.648.006					1	04'0820	06'0228	
	[44]	*SENSOR-SPEED*							
	4408.640.001					1	02'1201	06'0228	
	[45]	*PLUG-SPEEDO*							
	1000.141.014					1	02'1201	06'0228	
	[46]	*CLIP*							
	1900.056.011					1	02'1201	06'0228	
	[47]	*BOLT*							
	1900.183.012					3	02'1201	06'0228	
	[48]	*CONNECTOR*							
	4408.140.001					1	02'1201	06'0228	

3212 TRANSFER CASE-PART TIME(2)

ITC	KEY NO. PART NO	PART NAME OPTION	L/R	T/M	DRV	MODEL 662LA									EFF. DATE FROM	EFF. DATE TO	REMARK
	[49] 4408.140.002	*CLIP*				1									02'1201	06'0228	
	[50] 1900.183.002	*SCREW*				1									02'1201	06'0228	
	[51] 1900.056.004	*CLIP*				1									02'1201	06'0228	
	[52] 1000.132.039	*BEARING-NEEDLE*				1									02'1201	06'0228	
	[53] 1354.171.004	*SHAFT-FRT OUTPUT*				1									02'1201	06'0228	
	[54] 1354.144.003	*SPROCKET-DRIVE*				1									02'1201	06'0228	24T
	[55] 1350.193.003	*SPACER*				1									02'1201	06'0228	
	[56] 1000.139.038	*RING-SNAP*				1									02'1201	06'0228	
	[57] 1350.143.001	*CHAIN*				1									02'1201	06'0228	

3310 PROPELLER SHAFT

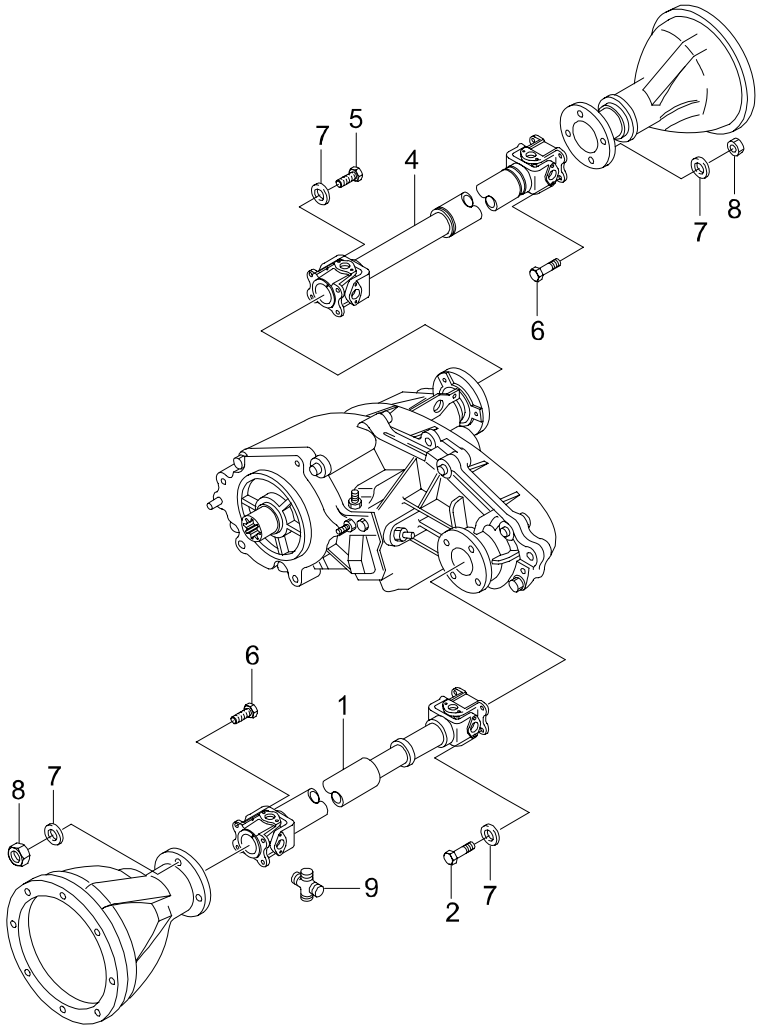

3310 PROPELLER SHAFT

ITC	KEY NO. PART NO	PART NAME OPTION	L/R	T/M	DRV	MODEL 662LA									EFF. DATE FROM	EFF. DATE TO	REMARK
	[01]	*SHAFT ASSY-PROPELLER FRT*															
	3310005701	4WD				1									02'1201	06'0228	L=669
	[02]	*BOLT*															
	3310205000					4									02'1201	06'0228	
	[04]	*SHAFT ASSY-PROPELLER RR*															
	3320007000	4WD		M		1									02'1201	06'0228	L=1205
	3320007100	4WD		A		1									02'1201	06'0228	L=1195
	3320007020	2WD ONLY				1									02'1201	06'0228	L=1491
	[05]	*BOLT*															
	3310205100					4									02'1201	06'0228	
	[06]	*BOLT*															
	957201035D					4									02'1201	06'0228	M10X1.25X35 ,HEX SEMS
	[07]	*WASHER*															
	933101200D					4									02'1201	06'0228	M12
	[08]	*NUT*															
	928981000D					4									02'1201	06'0228	M10X1.25
	[09]	*JOINT ASSY-UNIVERSAL*															
	4131101000					1									02'1201	06'0228	ASSY= JOINT(1), KEY(4)
	3311501000					1									02'1201	06'0228	ASSY= JOINT(1), SNAP RING(4), NIPPLE(1)

3410 SPEEDOMETER SENSOR & TCU

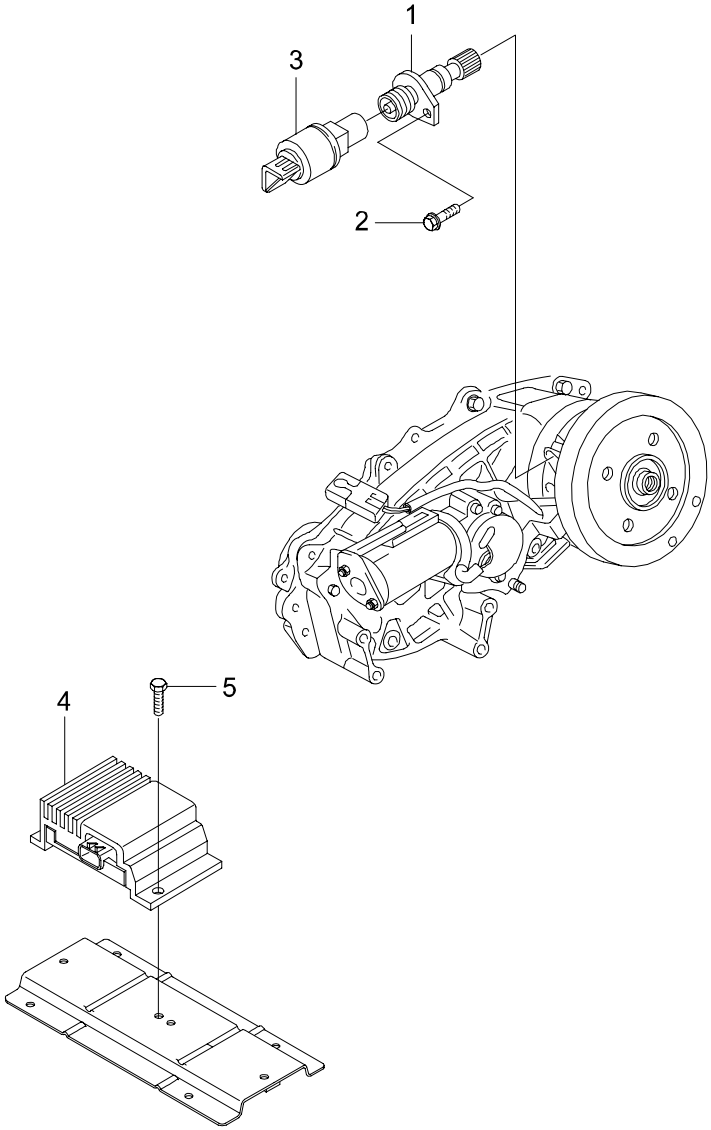

3410 SPEEDOMETER SENSOR & TCU

ITC	KEY NO. PART NO	PART NAME OPTION	L/R	T/M	DRV	MODEL 662LA									EFF. DATE FROM	EFF. DATE TO	REMARK
	[01]	*ADAPTOR & GEAR-SPEED METER*															
	3231005000					1									02'1201	06'0228	RATIO 4.55,3.91(19T)
	3231005010					1									02'1201	06'0228	RATIO 4.89,5.86(20T)
	3231005040					1									02'1201	03'1224	RATIO 3.73,4.27(18T)
O	3231005041					1									03'1225	06'0228	
	3231005050					1									02'1201	03'1229	RATIO 3.54(17T)
	[02]	*BOLT*															
	9001420161					1									02'1201	06'0228	
	[03]	*SENSOR ASSY-SPEED*															
	8134001301					1									02'1201	03'1116	4 PULSE
Y	8134001302					1									03'1117	05'0123	DENSO
N	8134008000					1									05'0124	06'0228	VDO
	[04]	*CONTROL UNIT-T/C*															
	3851005020	P/TIME				1									02'1201	03'0915	WHITE, 23 PIN
N	3851005030	P/TIME				1									03'0916	05'0329	CONNT: 26PIN
Y	3851005031	P/TIME				1									05'0330	06'0228	CONNT: 26PIN
	[05]	*BOLT*															
	982440616D					2									02'1201	06'0228	

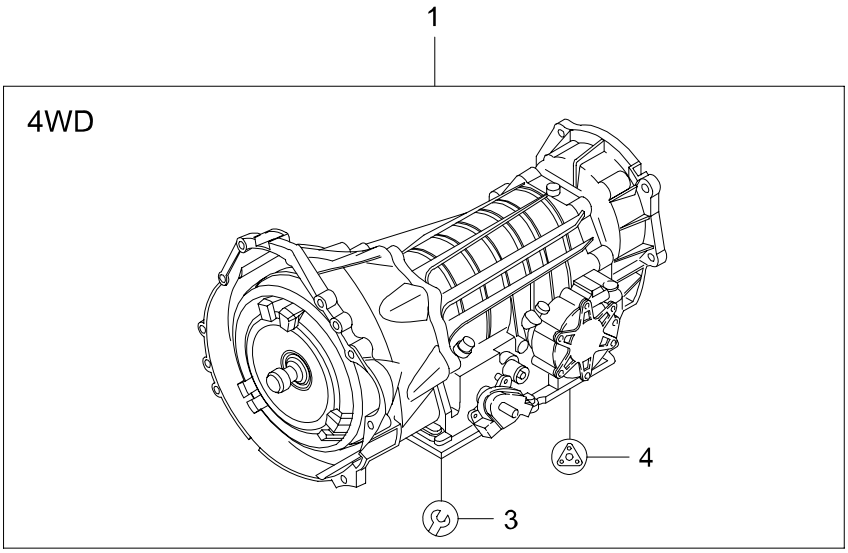
1
4WD
4
3

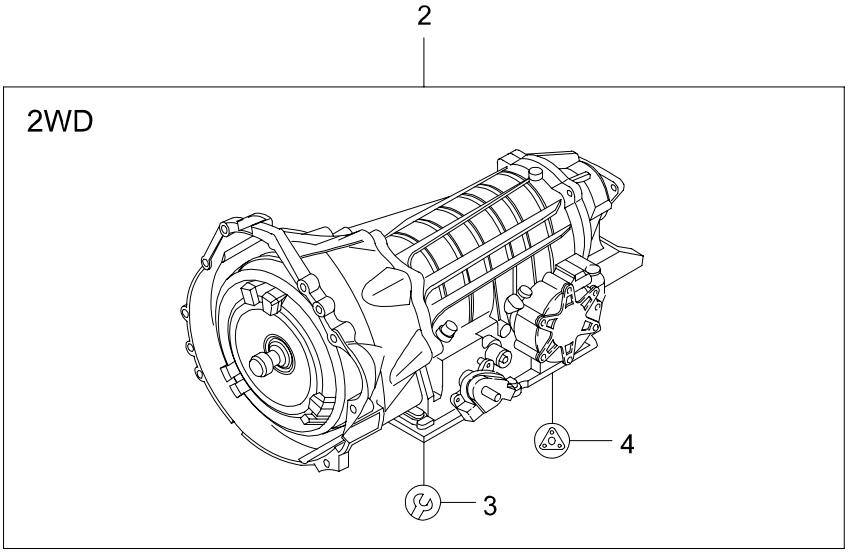
2
2WD
4
3

3640 AUTOMATIC TRANSMISSION(BTR M74)

ITC	KEY NO. PART NO	PART NAME OPTION	L/R	T/M	DRV	MODEL 662LA									EFF. DATE FROM	EFF. DATE TO	REMARK
	[01]	*A/T ASSY*															
	3610005412			A		1									02'1101	02'1109	
N	3610005413			A		1									02'1110	06'0228	
	[02]	*A/T ASSY*															
	3610005511	2WD ONLY		A		1									02'1201	02'1216	
N	3610005512	2WD ONLY		A		1									02'1217	06'0228	
	[03]	*OVERHAUL KIT*															
	0555-334785			A		1									02'1101	02'1109	
N	0555-340187			A		1									02'1110	06'0228	
	[04]	*O-RING,GASKET & SEAL KIT*															
	0555-334784			A		1									02'1101	02'1109	
N	0555-340186			A		1									02'1110	06'0228	

3641 CONVERTER HOUSING & OIL PUMP(BTR M74)

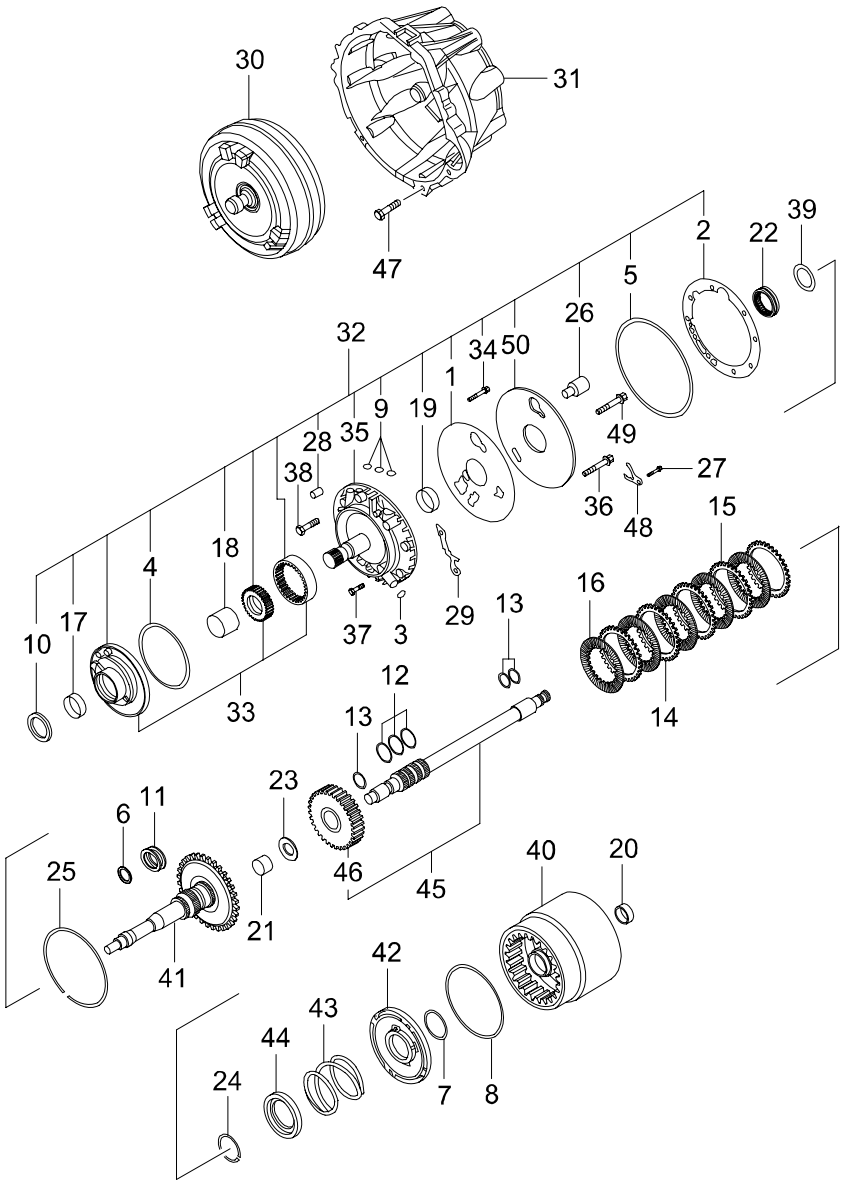

3641 - 01

3641 CONVERTER HOUSING & OIL PUMP(BTR M74)

ITC	KEY NO. PART NO	PART NAME OPTION	L/R	T/M	DRV	MODEL 662LA	EFF. DATE FROM	EFF. DATE TO	REMARK
	[01] 0574-045076	*GASKET*		A		1	02'1201	06'0228	
	[02] 0574-045077	*GASKET*		A		1	02'1201	06'0228	
	[03] 0585-141019	*RING-O*		A		1	02'1201	06'0228	
	[04] 0593-141052	*RING-O*		A		1	02'1109	06'0228	
	[05] 0585-141029	*RING-O*		A		1	02'1201	06'0228	
	[06] 0574-016007	*RING-SEAL*		A		1	02'1201	06'0228	
	[07] 0585-141018	*RING-O*		A		1	02'1201	06'0228	
	[08] 0585-141020	*RING-O*		A		1	02'1201	06'0228	
	[09] 0585-141025	*RING-O*		A		3	02'1201	06'0228	
	[10] 0593-044084	*SEAL-OIL*		A		1	02'1201	06'0228	
	[11] 0585-016004	*RING-SEAL*		A		2	02'1201	06'0228	
	[12] 0585-016014	*RING-SEAL*		A		4	02'1201	06'0228	
	[13] 0585-016013	*RING-SEAL*		A		3	02'1201	06'0228	
	[14] 0585-166007	*DISC-CLUTCH OTR*		A		1	02'1201	06'0228	
	[15] 0585-166008	*DISC-CLUTCH OTR*		A		1	02'1201	06'0228	

3641 CONVERTER HOUSING & OIL PUMP(BTR M74)

ITC	KEY NO. PART NO	PART NAME OPTION	L/R	T/M	DRV	MODEL 662LA	EFF. DATE FROM	EFF. DATE TO	REMARK
	[16] 0585-666007	*DISC-CLUTCH*		A		5	02'1201	06'0228	
	[17] 0585-427002	*BUSH*		A		1	02'1201	06'0228	
	[18] 0593-427016	*BUSH*		A		1	02'1201	06'0228	
	[19] 0585-427004	*BUSH*		A		1	02'1201	06'0228	
	[20] 0585-427006	*BUSH*		A		1	02'1201	06'0228	
	[21] 0585-427007	*BUSH*		A		1	02'1201	06'0228	
	[22] 0585-132022	*BEARING-NEEDLE*		A		1	02'1201	06'0228	
	[23] 0585-193071	*WASHER*		A		1	02'1201	06'0228	
	[24] 0585-139005	*RING-RETAINING*		A		1	02'1201	06'0228	
	[25] 0585-139017	*RING-SNAP*		A		2	02'1201	06'0228	
	[26] 0593-640076	*SOLENOID*		A		1	02'1201	06'0228	
	[27] 0585-183141	*SCREW*		A		1	02'1201	06'0228	
	[28] 0593-043093	*PIN*		A		1	02'1201	06'0228	
	[29] 0591-640055	*PLATE ASSY-CONTACT*		A		1	02'1201	06'0228	
	[30] 0574-511012	*CONVERTER ASSY-TORQUE*		A		1	02'1201	02'1109	150k
N	0574-511047			A		1	02'1110	06'0228	150K

3641 CONVERTER HOUSING & OIL PUMP(BTR M74)

ITC	KEY NO. PART NO	PART NAME OPTION	L/R	T/M	DRV	MODEL 662LA									EFF. DATE FROM	EFF. DATE TO	REMARK
	[31]	*HOUSING ASSY-CONVERTER*															
	0574-712002			A		1									02'1201	06'0228	
	[32]	*PUMP ASSY*															
	0574-508052			A		1									02'1101	02'1109	
N	0574-508062			A		1									02'1110	06'0228	
	[33]	*PUMP ASSY*															
	0574-508047			A		1									02'1201	02'1109	
N	0593-508061			A		1									02'1110	06'0228	
	[34]	*BOLT*															
	0585-183135			A		1									02'1201	06'0228	
	[35]	*COVER ASSY-PUMP*															
	0574-539058			A		1									02'1201	06'0228	
	[36]	*BOLT*															
	0585-183124			A		5									02'1201	06'0228	
	[37]	*BOLT*															
	0585-183125			A		6									02'1201	06'0228	
	[38]	*BOLT*															
	0591-183159			A		2									02'1201	06'0228	
	[39]	*SHIM*															
	0585-037001			A		1									02'1201	06'0228	
	0585-037002			A		1									02'1201	06'0228	
	0585-037003			A		1									02'1201	06'0228	
	[40]	*CYLINDER ASSY-CLUTCH MASTER*															
	0574-625018			A		1									02'1201	06'0228	
	[41]	*SHAFT ASSY-INPUT*															
	0574-689019			A		1									02'1201	06'0228	
	[42]	*PISTON ASSY-CLUTCH*															
	0591-624022			A		1									02'1201	04'1014	
O	0593-624030			A		1									04'1015	06'0228	
	[43]	*SPRING*															
	0591-156146			A		1									02'1201	06'0228	

3641 CONVERTER HOUSING & OIL PUMP(BTR M74)

ITC	KEY NO. PART NO	PART NAME OPTION	L/R	T/M	DRV	MODEL 662LA									EFF. DATE FROM	EFF. DATE TO	REMARK
	[44] 0585-040028	*RETAINER-SPRING*		A		1									02'1201	06'0228	
	[45] 0591-689018	*SHAFT ASSY-OVERDRIVE*		A		1									02'1201	06'0228	
	[46] 0585-090022	*HUB-CLUTCH*		A		1									02'1201	06'0228	
	[47] 0585-183137	*BOLT*		A		9									02'1201	06'0228	M12X32
	[48] 0585-056040	*RETAINER-SOLENOID*		A		1									02'1201	06'0228	
	[49] 0585-183141	*SCREW*		A		5									02'1201	06'0228	
	[50] 0574-014044	*PLATE-PUMP COVER*		A		1									02'1201	06'0228	

3642 TRANSMISSION HOUSING(BTR M74)

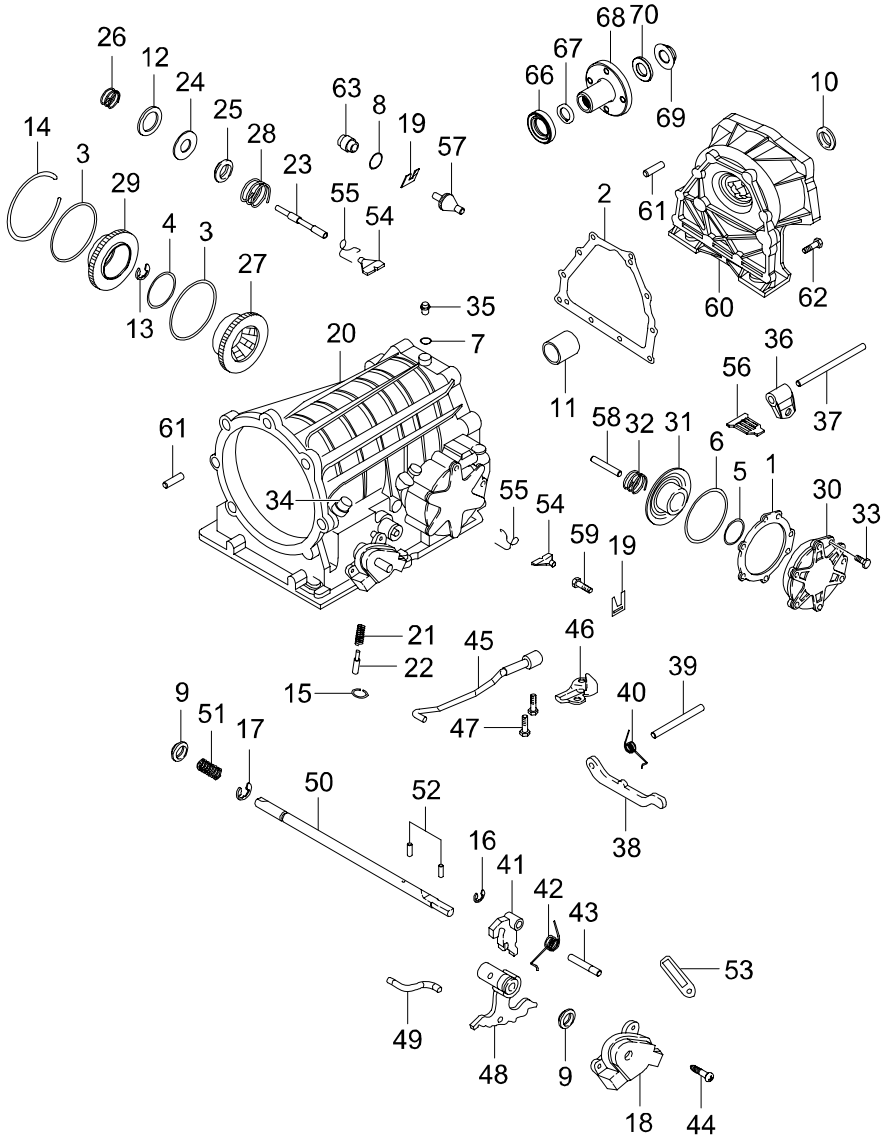

3642 - 01

3642 TRANSMISSION HOUSING(BTR M74)

ITC	KEY NO. PART NO	PART NAME OPTION	L/R	T/M	DRV	MODEL 662LA									EFF. DATE FROM	EFF. DATE TO	REMARK
	[01]	*GASKET-RR SERVO COVER*															
	0574-045068			A		1									02'0901	02'1109	
Y	0593-045064			A		1									02'1110	06'0228	
	[02]	*GASKET*															
	0574-045080			A		1									02'1201	06'0228	
	[03]	*RING-O*															
	0585-141022			A		2									02'1201	06'0228	
	[04]	*RING-O*															
	0585-141032			A		1									02'1201	06'0228	
	[05]	*RING-O*															
	0585-141028			A		1									02'1201	06'0228	
	[06]	*RING-O*															
	0585-141010			A		1									02'1201	06'0228	
	[07]	*RING-O*															
	0555-141054			A		1									02'1201	06'0228	
	[08]	*RING-O*															
	0593-141045			A		1									02'1201	06'0228	
	[09]	*SEAL-OIL*															
	0593-044080			A		2									02'1201	06'0228	
	[10]	*SEAL-OIL*															
	1300-044015			A		1									02'1101	02'1104	
Y	1300.044.015			A		1									02'1105	02'1108	
Y	0574-044086			A		1									02'1109	06'0228	
	[11]	*BUSH*															
	0593-427019			A		1									02'1201	06'0228	
	[12]	*WASHER*															
	0585-193078			A		1									02'1201	06'0228	
	[13]	*RING-RETAINING*															
	0540-139005			A		1									02'1201	06'0228	

3642 TRANSMISSION HOUSING(BTR M74)

ITC	KEY NO. PART NO	PART NAME OPTION	L/R	T/M	DRV	MODEL 662LA	EFF. DATE FROM	EFF. DATE TO	REMARK
	[14] 0585-139009	*RING-SNAP*		A		1	02'1201	06'0228	
	[15] 0585-139008	*RING-SNAP*		A		1	02'1201	06'0228	
	[16] 0555-139174	*RING-RETAINING*		A		1	02'1201	06'0228	
	[17] 0540-139005	*RING-RETAINING*		A		1	02'1201	06'0228	
	[18]	*SWITCH ASSY-INHIBITOR*							
	0593-640072			A		1	02'1101	02'1109	
N	0593-640105			A		1	02'1110	06'0228	
	[19]	*SHIM*							
	0574-037017			A		1	02'1201	06'0228	T=0.95~1.05
	0574-037018			A		1	02'1201	06'0228	T=1.15~1.25
	0574-037019			A		1	02'1201	06'0228	T=1.44~1.56
	0574-037020			A		1	02'1201	06'0228	T=1.73~1.87
	0574-037021			A		1	02'1201	06'0228	T=1.93~1.07
	0574-037022			A		1	02'1201	06'0228	T=2.12~2.28
	0574-037023			A		1	02'1201	06'0228	T=2.42~2.58
	0574-037024			A		1	02'1201	06'0228	T=2.61~2.79
	[20] 0574-565019	*CASE ASSY-T/M*		A		1	02'1201	06'0228	
	[21] 0585-156129	*SPRING*		A		1	02'1201	06'0228	
	[22] 0585-237069	*VALVE-BIR EXHAUST*		A		1	02'1201	06'0228	
	[23] 0585-190022	*ROD-FRT SERVO PUSH*		A		1	02'1201	06'0228	
	[24] 0585-156125	*SPRING*		A		1	02'1201	06'0228	
	[25] 0593-040040	*SEAT-SPRING*		A		1	02'1201	06'0228	

3642 TRANSMISSION HOUSING(BTR M74)

ITC	KEY NO. PART NO	PART NAME OPTION	L/R	T/M	DRV	MODEL 662LA									EFF. DATE FROM	EFF. DATE TO	REMARK
	[26] 0585-156116	*SPRING*		A		1									02'1201	06'0228	
	[27] 0585-124011	*PISTON-FRT SERVO*		A		1									02'1201	06'0228	
	[28] 0593-156147	*SPRING*		A		1									02'1201	06'0228	
	[29] 0591-039001	*COVER-FRT SERVO*		A		1									02'1201	06'0228	
	[30] 0593-039002	*COVER ASSY-RR SERVO*		A		1									02'1201	06'0228	
	[31] 0585-124023	*PISTON-RR SERVO*		A		1									02'1201	06'0228	
	[32] 0585-156107	*SPRING*		A		1									02'1201	06'0228	
	[33] 0593-183175	*BOLT*		A		6									02'1201	06'0228	M8X1.25X25
	[34] 0574-188020	*CONNECTOR*		A		2									02'1201	06'0228	
	[35] 0552-072006	*BREATHER*		A		1									02'1201	06'0228	
	[36] 0585-098057	*LEVER-RR SERVO*		A		1									02'1201	06'0228	
	[37] 0574-043090	*PIN*		A		1									02'1201	06'0228	
	[38] 0574-504008	*PAWL-PARKING BRAKE*		A		1									02'1201	06'0228	
	[39] 0574-043091	*PIN*		A		1									02'1201	06'0228	
	[40] 0574-156160	*SPRING*		A		1									02'1201	06'0228	

3642 TRANSMISSION HOUSING(BTR M74)

ITC	KEY NO. PART NO	PART NAME OPTION	L/R	T/M	DRV	MODEL 662LA	EFF. DATE FROM	EFF. DATE TO	REMARK
	[41] 0585-098063	*LEVER ASSY-PARKING BRAKE ROD*		A		1	02'1201	06'0228	
	[42] 0585-156104	*SPRING*		A		1	02'1201	06'0228	
	[43] 0585-043074	*PIN*		A		1	02'1201	06'0228	
	[44] 0540-183062	*SCREW*		A		2	02'1201	06'0228	
	[45] 0574-690011	*ROD ASSY-ACTUATING*		A		1	02'1201	06'0228	
	[46] 0574-099028	*PLATE-CAM RETAINING*		A		1	02'1201	06'0228	
	[47] 0585-183132	*SCREW*		A		2	02'1201	06'0228	
	[48] 0593-598064	*LEVER ASSY-MANUAL VALVE DETENT*		A		1	02'1201	06'0228	
	[49] 0585-190138	*LINK-MANUAL VALVE ACTUATING*		A		1	02'1201	06'0228	
	[50] 0574-122011	*SHAFT-MANUAL VALVE DETENT*		A		1	02'1201	06'0228	
	[51] 0555-156025	*SPRING*		A		1	02'1201	06'0228	
	[52] 0585-043078	*PIN*		A		2	02'1201	06'0228	
	[53] 0574-056062	*CLIP*		A		1	02'1201	06'0228	
	[54] 0593-190033	*STRUT-FRT BAND*		A		2	02'1201	06'0228	
	[55] 0593-056046	*RETAINER*		A		2	02'1201	06'0228	

3642 TRANSMISSION HOUSING(BTR M74)

ITC	KEY NO. PART NO	PART NAME OPTION	L/R	T/M	DRV	MODEL 662LA	EFF. DATE FROM	EFF. DATE TO	REMARK
	[56] 0585-190027	*STRUT-APPLY*		A		1	02'1201	06'0228	
	[57] 0593-190035	*STRUT-RR SERVO ANCHOR*		A		1	02'1201	06'0228	
	[58] 0585-190028	*ROD-RR SERVO*		A		1	02'1201	06'0228	
	[59] 0593-190034	*ANCHOR-STRUT*		A		1	02'1201	06'0228	
	[60] 0574-566006	*HOUSING ASSY-ADAPTOR*		A		1	02'1201	06'0228	2WD ONLY
	0574-566005			A		1	02'1101	06'0228	
	[61] 0574-043092	*PIN-DOWEL*		A		2	02'1201	06'0228	
	[62] 0593-183175	*BOLT*		A		10	02'1201	06'0228	M8X1.25X25
	[63] 0593-052010	*PLUG-FILLER*		A		1	02'1201	06'0228	
	[66] 0572-132028	*BEARING-NEEDLE ROLLER* 2WD ONLY		A		1	02'1201	06'0228	
	[67] 0593-044085	*SEAL-OIL* 2WD ONLY		A		1	02'1201	02'1216	
N	0593-044145			A		1	02'1217	06'0228	2WD ONLY
	[68] 0574-031004	*FLANGE ASSY-OUTPUT* 2WD ONLY		A		1	02'1201	06'0228	
	[69] 0574-149043	*NUT* 2WD ONLY		A		1	02'1201	06'0228	
	[70] 0585-141017	*RING-O* 2WD ONLY		A		1	02'1201	06'0228	

3643 VALVE BODY(BTR M74)

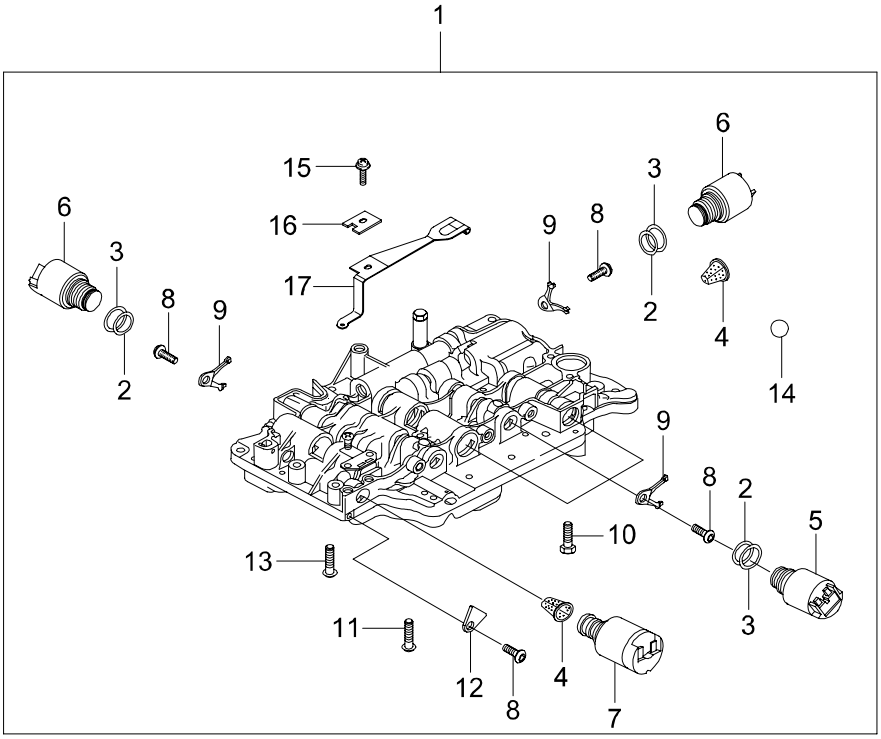

3643 VALVE BODY(BTR M74)

ITC	KEY NO. PART NO	PART NAME OPTION	L/R	T/M	DRV	MODEL 662LA									EFF. DATE FROM	EFF. DATE TO	REMARK
	[01] 0574-736090	*BODY ASSY-VALVE*		A		1									02'1201	06'0228	
	[02] 0585-141037	*RING-O*		A		1									02'1201	06'0228	
	[03] 0585-141039	*RING-O*		A		1									02'1201	06'0228	
	[04] 0591-238007	*FILTER-SOLENOID*		A		1									02'1201	06'0228	
	[05] 0593-640076	*SOLENOID*		A		3									02'1201	06'0228	S1,S2,S7
	[06] 0585-640029	*SOLENOID*		A		3									02'1201	06'0228	S3,S4,S6
	[07] 0593-640078	*SOLENOID*		A		1									02'1201	06'0228	S5
	[08] 0585-183141	*SCREW*		A		1									02'1201	06'0228	
	[09] 0585-056040	*RETAINER-SOLENOID*		A		1									02'1201	06'0228	
	[10] 0591-183160	*BOLT*		A		1									02'1201	06'0228	
	[11] 0585-183152	*SCREW*		A		7									02'1201	06'0228	
	[12] 0593-107004	*RETAINER-SOLENOID*		A		1									02'1201	06'0228	
	[13] 0585-183153	*SCREW*		A		5									02'1201	06'0228	
	[14] 0585-109004	*BALL-NYLON*		A		1									02'1201	06'0228	
	[15] 0585-183132	*SCREW*		A		1									02'1201	06'0228	M16X16

3643 VALVE BODY(BTR M74)

ITC	KEY NO. PART NO	PART NAME OPTION	L/R	T/M	DRV	MODEL 662LA									EFF. DATE FROM	EFF. DATE TO	REMARK
	[16] 0585-040034	*RETAINER-DETENT SPRING*		A		1									02'1201	06'0228	
	[17] 0585-656006	*SPRING ASSY-DETENT*		A		1									02'1201	06'0228	

3644 OIL PAN(BTR M74)

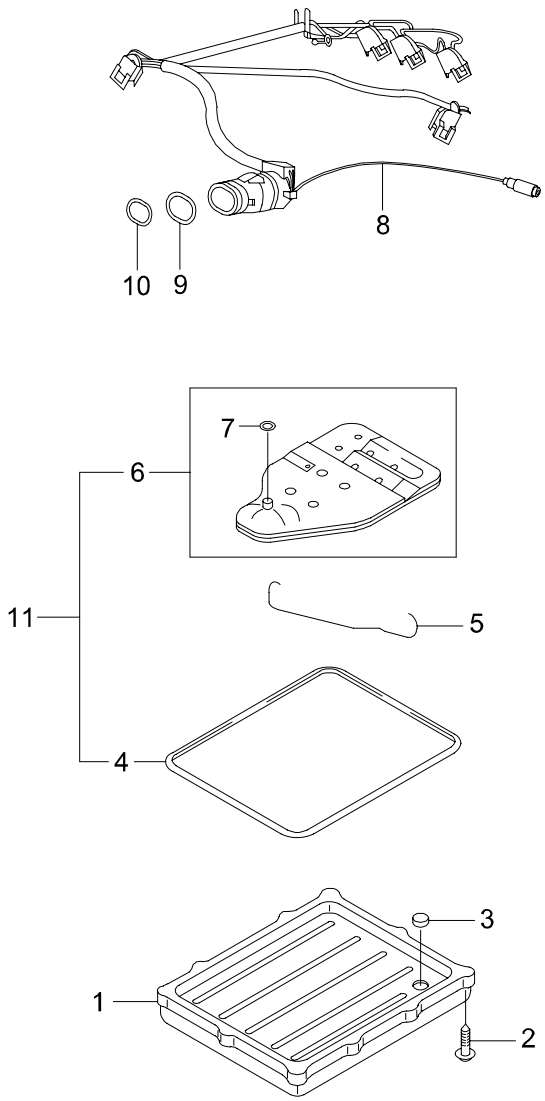

3644 OIL PAN(BTR M74)

ITC	KEY NO. PART NO	PART NAME OPTION	L/R	T/M	DRV	MODEL 662LA									EFF. DATE FROM	EFF. DATE TO	REMARK
	[01] 0585-013004	*PAN-OIL*		A		1									02'1201	06'0228	
	[02] 0585-683004	*SCREW*		A		9									02'1201	06'0228	
	[03] 0540-012001	*MAGNET*		A		1									02'1201	06'0228	
	[04] 0585-045045	*GASKET-OIL PAN*		A		1									02'1201	06'0228	
	[05] 0593-056059	*CLIP*		A		1									02'1201	06'0228	
	[06] 0572-738004	*FILTER ASSY-OIL*		A		1									02'1201	06'0228	
	[07] 0555-332222	*FILTER-MULTILIP*		A		1									02'1201	06'0228	
	[08] 0574-640084	*WIRING ASSY-ROOM*		A		1									02'1201	06'0228	
	[09] 0593-141017	*RING-O*		A		1									02'1201	06'0228	
	[10] 0593-141044	*RING-O*		A		1									02'1201	06'0228	
	[11] 0555-334783	*FILTER SERVICE KIT*		A		1									02'1201	06'0228	

3645 CLUTCH(BTR M74)

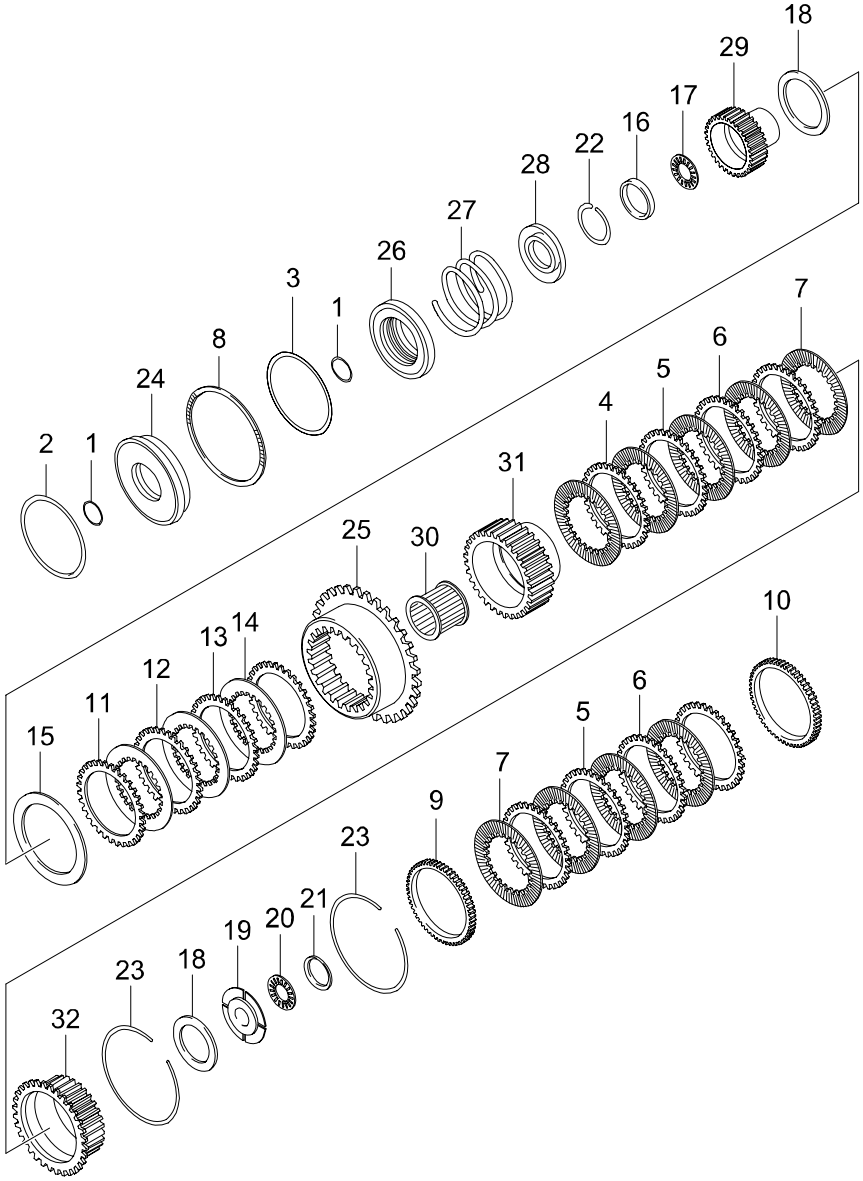

3645 - 01

3645 CLUTCH(BTR M74)

ITC	KEY NO. PART NO	PART NAME OPTION	L/R	T/M	DRV	MODEL 662LA									EFF. DATE FROM	EFF. DATE TO	REMARK
	[01] 0585-141018	*RING-O*		A		2									02'1201	06'0228	
	[02] 0585-141021	*RING-O*		A		1									02'1201	06'0228	
	[03] 0585-141036	*RING-O*		A		1									02'1201	06'0228	
	[04] 0585-166026	*DISC-CLUTCH OTR*		A		1									02'1201	06'0228	
	[05] 0585-166007	*DISC-CLUTCH OTR*		A		1									02'1201	06'0228	
	[06] 0585-166008	*DISC-CLUTCH OTR*		A		1									02'1201	06'0228	
	[07] 0585-666007	*DISC-CLUTCH*		A		4									02'1201	06'0228	
	[08] 0574-050026	*WASHER*		A		1									02'1201	06'0228	
	[09] 0593-062018	*PLATE-CLUTCH*		A		1									02'1201	06'0228	
	[10] 0593-050025	*WASHER-WAVE*		A		1									02'1201	06'0228	
	[11] 0585-166030	*DISC-CLUTCH OTR*		A		3									02'1201	06'0228	
	[12] 0585-166037	*DISC-CLUTCH OTR*		A		1									02'1201	06'0228	
	[13] 0585-166036	*DISC-CLUTCH OTR*		A		1									02'1201	06'0228	
	[14] 0585-666010	*DISC-CLUTCH OTR*		A		3									02'0901	06'0228	
	[15] 0593-050023	*WASHER-WAVE*		A		1									02'1201	06'0228	

3645 CLUTCH(BTR M74)

ITC	KEY NO. PART NO	PART NAME OPTION	L/R	T/M	DRV	MODEL 662LA									EFF. DATE FROM	EFF. DATE TO	REMARK
	[16] 0585-193066	*PLATE-THRUST*		A		1									02'1201	06'0228	
	[17] 0585-132011	*BEARING-NEEDLE*		A		1									02'1201	06'0228	
	[18] 0585-193072	*WASHER*		A		1									02'1201	06'0228	
	[19] 0585-193076	*PLATE-THRUST*		A		1									02'1201	06'0228	
	[20] 0585-132011	*BEARING-NEEDLE*		A		1									02'1201	06'0228	
	[21] 0585-193080	*PLATE-THRUST*		A		1									02'1201	06'0228	
	[22] 0585-139005	*RING-RETAINING*		A		1									02'1201	06'0228	
	[23] 0585-139017	*RING-SNAP*		A		1									02'1201	06'0228	
	[24] 0593-124031	*PISTON ASSY-CLUTCH*		A		1									02'1201	05'0815	
Y	0593-124038			A		1									05'0816	06'0228	
	[25] 0585-103061	*SLEEVE-ACTUATING CLUTCH*		A		1									02'1201	06'0228	
	[26] 0593-124030	*PISTON ASSY-CLUTCH*		A		1									02'1201	06'0228	
	[27] 0585-156092	*SPRING*		A		1									02'1201	06'0228	
	[28] 0585-040027	*RETAINER-SPRING*		A		1									02'1201	06'0228	
	[29] 0585-090025	*HUB-CLUTCH MACHINING*		A		1									02'1201	06'0228	
	[30] 0593-506012	*CLUTCH ASSY*		A		1									02'1201	06'0228	

3645 CLUTCH(BTR M74)

ITC	KEY NO. PART NO	PART NAME OPTION	L/R	T/M	DRV	MODEL 662LA									EFF. DATE FROM	EFF. DATE TO	REMARK
	[31] 0585-090024	*HUB-CLUTCH MACHINING*		A		1									02'1201	06'0228	
	[32] 0585-090029	*HUB-RR CLUTCH*		A		1									02'1201	06'0228	

3646 OUTPUT SHAFT(BTR M74)

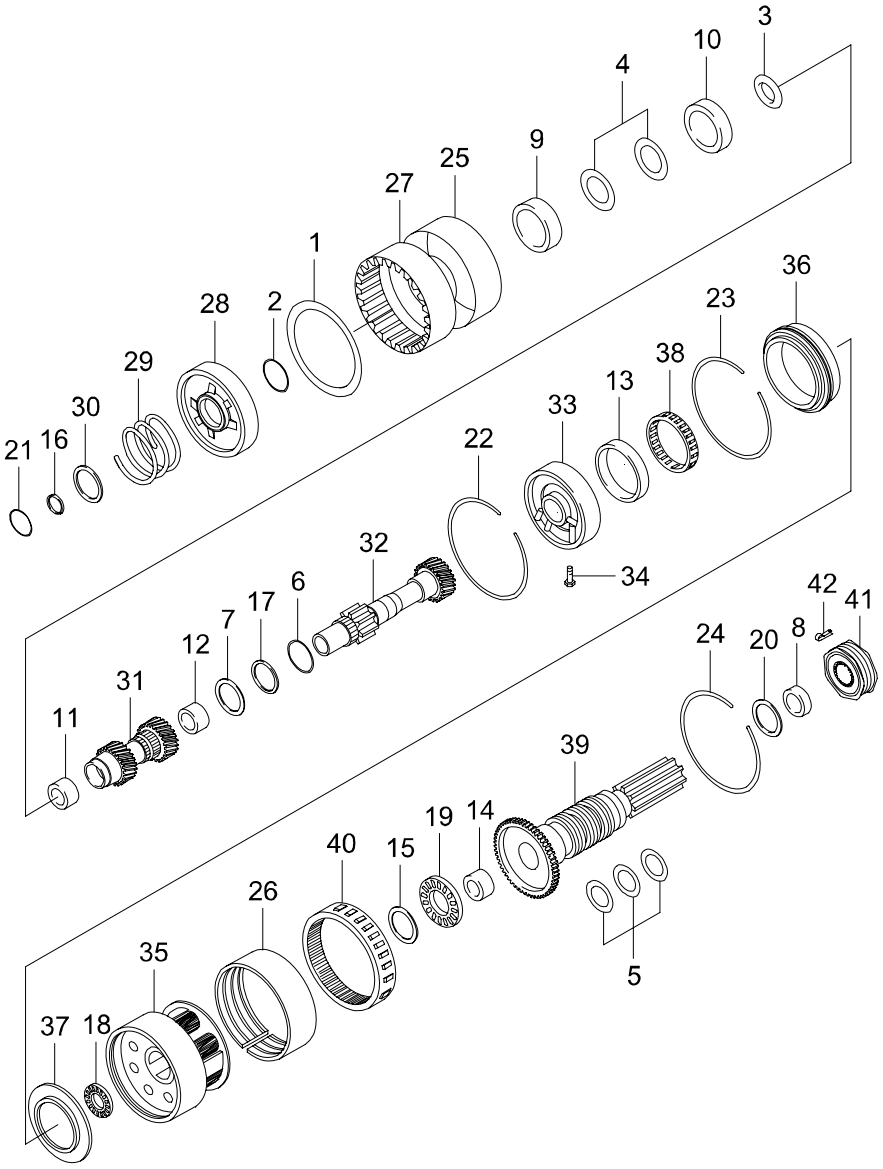

3646 - 01

3646 OUTPUT SHAFT(BTR M74)

ITC	KEY NO. PART NO	PART NAME OPTION	L/R	T/M	DRV	MODEL 662LA									EFF. DATE FROM	EFF. DATE TO	REMARK
	[01] 0585-141021	*RING-O*		A		1									02'1201	06'0228	
	[02] 0585-141015	*RING-O*		A		1									02'1201	06'0228	
	[03] 0585-141027	*RING-O*		A		1									02'1201	06'0228	
	[04] 0585-016011	*RING-SEAL*		A		2									02'1201	06'0228	
	[05] 0585-016015	*RING-SEAL*		A		3									02'1201	06'0228	
	[06] 0574-193105	*WASHER*		A		1									02'1201	06'0228	
	[07] 0574-193102	*WASHER*		A		1									02'1201	06'0228	
	[08] 0585-427001	*BUSH*		A		1									02'1201	06'0228	
	[09] 0585-427008	*BUSH*		A		1									02'1201	06'0228	
	[10] 0585-427009	*BUSH*		A		1									02'0901	06'0228	
	[11] 0500-427021	*BUSH*		A		1									02'1201	06'0228	
	[12] 0500-427022	*BUSH*		A		1									02'1201	06'0228	
	[13] 0585-427012	*BUSH*		A		1									02'1201	06'0228	
	[14] 0585-427013	*BUSH*		A		1									02'1201	06'0228	
	[15] 0595-193081	*WASHER*		A		1									02'1201	06'0228	

3646 OUTPUT SHAFT(BTR M74)

ITC	KEY NO. PART NO	PART NAME OPTION	L/R	T/M	DRV	MODEL 662LA	EFF. DATE FROM	EFF. DATE TO	REMARK
	[16] 0585-139007	*RING-SNAP*		A		1	02'1201	06'0228	
	[17] 0574-132029	*BEARING-NEEDLE*		A		1	02'1201	06'0228	
	[18] 0595-132027	*BEARING-NEEDLE*		A		1	02'1201	06'0228	
	[19] 0555-143029	*BEARING-NEEDLE*		A		1	02'1201	06'0228	
	[20] 0585-132013	*BEARING-NEEDLE*		A		1	02'1201	06'0228	
	[21] 0585-053020	*SPACER-THRUST*		A		1	02'1201	06'0228	
	[22] 0585-139016	*RING-SNAP*		A		1	02'1201	06'0228	
	[23] 0585-139014	*RING-RETAINING*		A		1	02'1201	06'0228	
	[24] 0574-139018	*RING-SNAP*		A		1	02'1201	06'0228	
	[25] 0585-557072	*BAND-FRT*		A		1	02'1201	06'0228	
	[26] 0574-557107	*BAND-RR*		A		1	02'1201	06'0228	
	[27] 0574-625025	*PISTON ASSY-CLUTCH*		A		1	02'1101	02'1109	
N	0574-625038			A		1	02'1110	05'0405	0574-625038 ORDER BY INSTEAD OF=0574-625040+0574-193104
O	0574-625040			A		1	05'0406	06'0228	0574-625038=(0574-625040)+(0574-193104)
	[28] 0593-124029	*PISTON ASSY-CLUTCH*		A		1	02'1201	04'0913	
Y	0593-124039			A		1	04'0914	06'0228	

3646 OUTPUT SHAFT(BTR M74)

ITC	KEY NO. PART NO	PART NAME OPTION	L/R	T/M	DRV	MODEL 662LA									EFF. DATE FROM	EFF. DATE TO	REMARK
	[29] 0585-156092	*SPRING*		A		1									02'1201	06'0228	
	[30] 0585-040029	*RETANER-SPRING*		A		1									02'1201	06'0228	
	[31] 0574-665033	*GEAR ASSY-REVERSE SUN*		A		1									02'1201	06'0228	
	[32] 0574-165029	*GEAR-PLANETARY SUN*		A		1									02'1201	06'0228	
	[33] 0572-507018	*SUPT ASSY-CTR*		A		1									02'1201	02'1109	
N	0593-507020			A		1									02'1110	06'0228	
	[34] 0585-183131	*SCREW*		A		1									02'1201	06'0228	
	[35] 0574-659013	*CARRIER ASSY-PLANETARY*		A		1									02'1201	06'0228	
	[36] 0585-018013	*RACE-OTR*		A		1									02'1201	06'0228	
	[37] 0585-107002	*RETAINER*		A		1									02'1201	06'0228	
	[38] 0593-506013	*CLUTCH ASSY-RR*		A		1									02'1201	06'0228	
	[39] 0574-671012	*SHAFT ASSY-OUTPUT*		A		1									02'1201	06'0228	4WD
	0574-671021	2WD ONLY		A		1									02'1201	06'0228	
	[40] 0574-162010	*GEAR-RING*		A		1									02'1201	06'0228	
	[41] 0574-110031	*GEAR-SPEEDO DRIVE* 2WD ONLY		A		1									02'1201	06'0228	
	[42] 0555-139186	*CLIP* 2WD ONLY		A		1									02'1201	06'0228	

3670 POWER TRAIN AUXILARY PARTS(BTR M74)

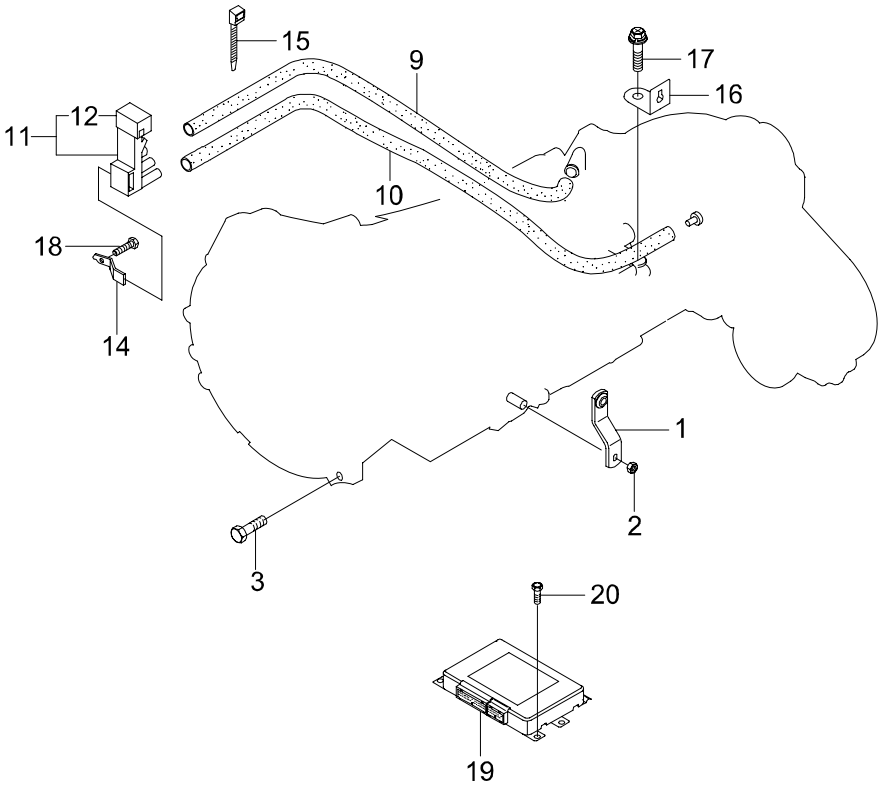

3670 POWER TRAIN AUXILARY PARTS(BTR M74)

ITC	KEY NO. PART NO	PART NAME OPTION	L/R	T/M	DRV	MODEL 662LA									EFF. DATE FROM	EFF. DATE TO	REMARK
	[01] 3616005400	*LEVER-RANGE SELECTOR*				1									02'1201	06'0228	
	[02] 9906008100	*NUT*				1									02'1201	06'0228	M8X1.25
	[03] 3612605331	*BOLT-TIGHTENING*				6									02'1201	06'0228	L=18mm
	[09] 3637105051	*HOSE-VENTILATION*				1									02'1201	06'0228	L=640mm
	[10] 3637105061	*HOSE-VENTILATION* 4WD ONLY				1									02'1201	06'0228	L=800mm
	[11] 3638005000	*PIPE ASSY-VENTLATION*				1									02'1201	06'0228	WITH CAP
	[12] 3638605000	*CAP ASSY*				1									02'1201	06'0228	
	[14] 3638705010	*BRKT-VENT PIPE*				1									02'1201	06'0228	2WD
	3638705000					1									02'1201	06'0228	
	[15] 8295205000	*BAND*				2									02'1201	06'0228	
	[16] 6615453050	*BRKT*				1									02'1201	06'0228	
	[17] 982640616D	*SCREW*				1									02'1201	06'0228	M6X1.0X16
	[18] 916271025D	*BOLT*				1									02'1201	06'0228	M10X1.5X25
	[19] 3660006000	*T/M CONTROL UNIT*				1									02'1201	06'0228	
	[20] 982740616D	*SCREW*				2									02'1201	06'0228	M6X1.0X16

3710 MANUAL SHIFT CONTROL

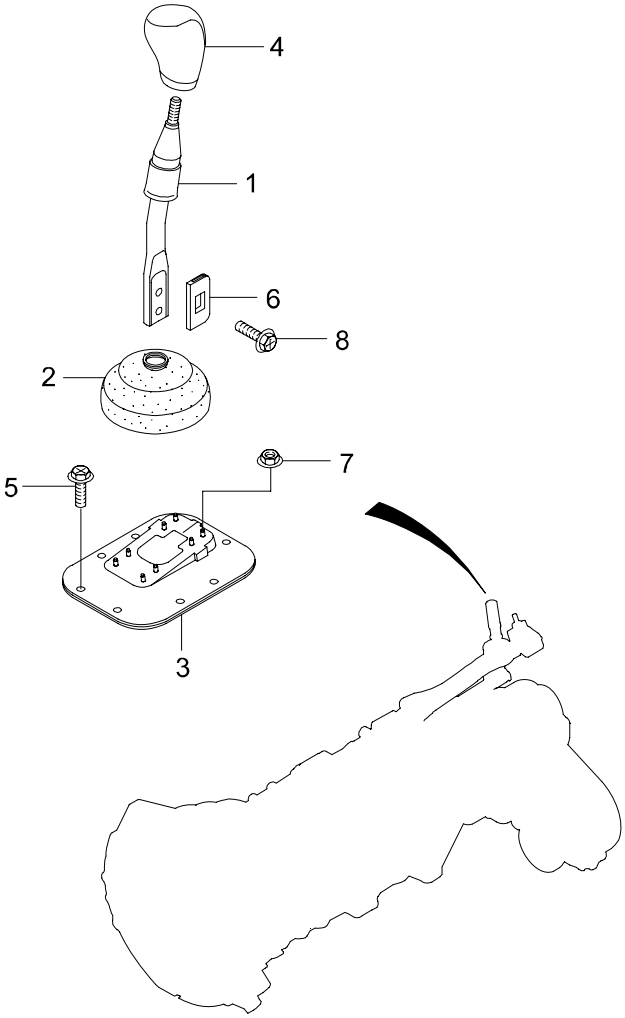

3710 MANUAL SHIFT CONTROL

ITC	KEY NO. PART NO	PART NAME OPTION	L/R	T/M	DRV	MODEL 662LA									EFF. DATE FROM	EFF. DATE TO	REMARK
	[01] 3171005A01	*LEVER ASSY-T/M GEAR SHIFT*				1									02'1201	06'0228	
	[02] 3176005A00	*BOOT ASSY-T/M SHIFT LEVER*				1									02'1201	06'0228	
	[03] 3175005A10	*BRKT ASSY-T/M BOOT MTG*				1									02'1201	06'0228	
	[04] 3173006100LAD	*KNOB-T/M SHIFT LEVER* PVC		M		1									02'1201	06'0228	
	[05] 982740620D	*SCREW*				8									02'1201	06'0228	M6X1.0X20
	[06] 3177105A01	*WASHER*				1									02'1201	06'0228	
	[07] 9906508000	*NUT*				4									02'1201	06'0228	M8X1.25
	[08] 9901208201	*BOLT-FLANGE*		M		2									02'1201	06'0228	M8X1.25X20

3740 AUTO SHIFT C0NTROL(BTRA)

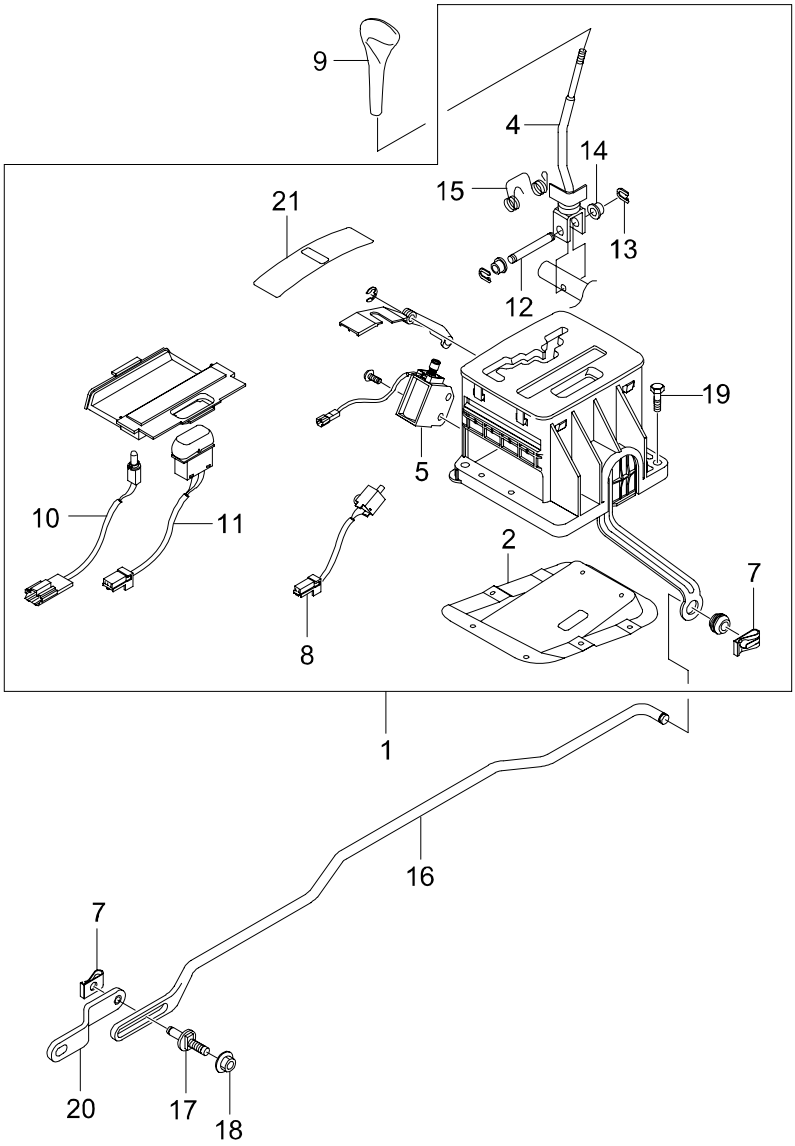

3740 AUTO SHIFT C0NTROL(BTRA)

ITC	KEY NO. PART NO	PART NAME OPTION	L/R	T/M	DRV	MODEL 662LA	EFF. DATE FROM	EFF. DATE TO	REMARK
	[01]	*LEVER & BRKT ASSY-A/T*							
	3671005A60					1	02'1201	05'0423	SEPERATED KNOB
O	3671005A61					1	05'0715	06'0228	SEPERATED KNOB
	3671005A00LAB	PVC				1	02'0901	05'0714	
Y	3671005A01LAB	PVC				1	05'0715	06'0228	
	3671005A21LAB	BTRA, PVC			R	1	05'0811	06'0228	
	[02]	*BRKT ASSY-MTG*							
	3671106900					1	02'1201	06'0228	
	[04]	*LEVER-SHIFT*							
	3671206900					1	02'1201	06'0228	
	[05]	*SOLENOID ASSY-A/T*							
	8838005900					1	02'1201	06'0228	
	[07]	*CLIP*							
	0009944160					2	02'1201	06'0228	
	[08]	*SWITCH ASSY-P POSITION*							
	8579005000					1	02'1201	06'0228	
	[09]	*KNOB-A/T LEVER*							
	3673005A00LAB	PVC				1	02'1201	06'0228	
	3673005A40UAE	W/GRAIN				1	02'1201	03'0302	
N	3673005A40UAR	W/GRAIN,2003M/Y				1	03'0303	06'0228	
	[10]	*WIRING-AUTO EXTENSION*							
	8298005010					1	02'1201	06'0228	
	[11]	*SWITCH ASSY-POWER & WINTER MODE SELECTOR*							
	8580105901					1	02'1201	06'0228	
	[12]	*PIN-JOINT*							
	3675305700					1	02'1201	06'0228	
	[13]	*WASHER-LOCK*							
	3679105700					1	02'1201	06'0228	
	[14]	*BUSH*							
	3675405700					1	02'1201	06'0228	

3740 AUTO SHIFT C0NTROL(BTRA)

ITC	KEY NO. PART NO	PART NAME OPTION	L/R	T/M	DRV	MODEL 662LA									EFF. DATE FROM	EFF. DATE TO	REMARK
	[15] 3675505700	*SPRING-TORSION*				1									02'1201	06'0228	
	[16] 3675105904	*ROD-A/T LEVER*				1									02'1201	06'0228	L=554
	[17] 3675205903	*PIN-ROD ADJUST*				1									02'1201	06'0228	
	[18] 9906508000	*NUT*				1									02'1201	06'0228	M8X1.25
	[19] 982740635D	*SCREW*				4									02'1201	06'0228	M6X1.0X35
	[20] 3616005400	*LEVER-RANGE SELECTOR*				1									02'1201	06'0228	
	[21] 36726050A0	*SLIDER-AUTO SHIFT LEVER*				1									02'1201	06'0228	

3750 AUTO COOLING SYSTEM

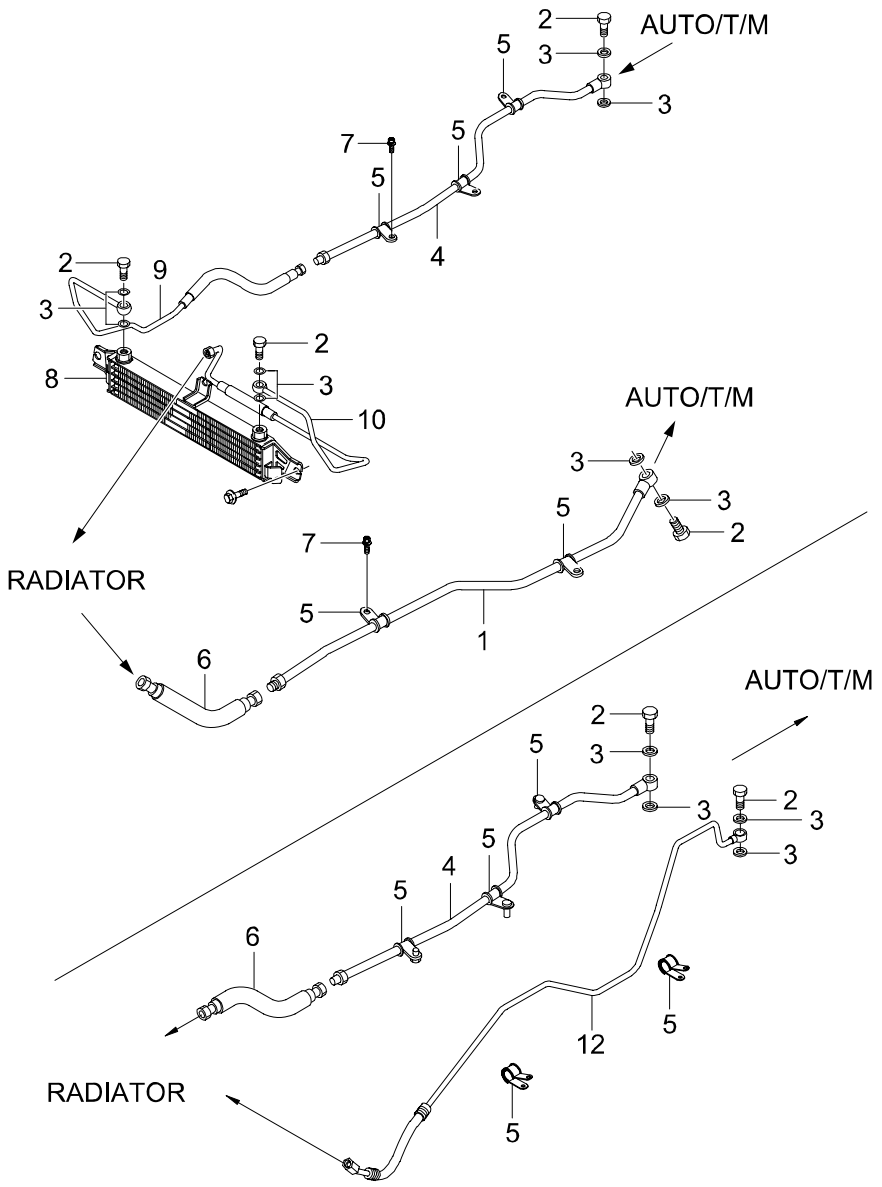

3750 AUTO COOLING SYSTEM

ITC	KEY NO. PART NO	PART NAME OPTION	L/R	T/M	DRV	MODEL 662LA	EFF. DATE FROM	EFF. DATE TO	REMARK
	[01] 3681005111	*TUBE ASSY-A/T INLET*		A		1	02'1201	04'0419	3681005220=>3681005111(TUBE) + 3684005002(HOSE)
	[02] 3681305100	*BOLT*		A		2	02'1201	06'0228	
	[03] 3681405000	*WASHER*		A		4	02'1201	06'0228	
	[04] 3682005111	*TUBE ASSY-A/T OUTLET*		A		1	02'1201	06'0228	ORDER BY: 3682005220
	[05] 3683005000	*CLIP*		A		5	02'1201	06'0228	
	[06] 3684005002	*HOSE ASSY-A/T*		A		2	02'1201	06'0228	
	[07] 982740620D	*SCREW*		A		5	02'1201	06'0228	M6X1.0X20
	[08] 3689005121X	*COOLER ASSY-T/M*		A		1	02'1201	03'0331	
Y	3689005120	BTRA		A		1	03'0401	06'0228	
	[09] 3686005120	*HOSE ASSY-TUBE & COOOLER*		A		1	02'1201	06'0228	
	[10] 3687005120	*HOSE ASSY-COOLER & TUBE*		A		1	02'1201	06'0228	
	[12] 3681005220	*HOSE ASSY-A/T INLET*				1	04'0419	06'0228	ONE BODY

4010 FRAME

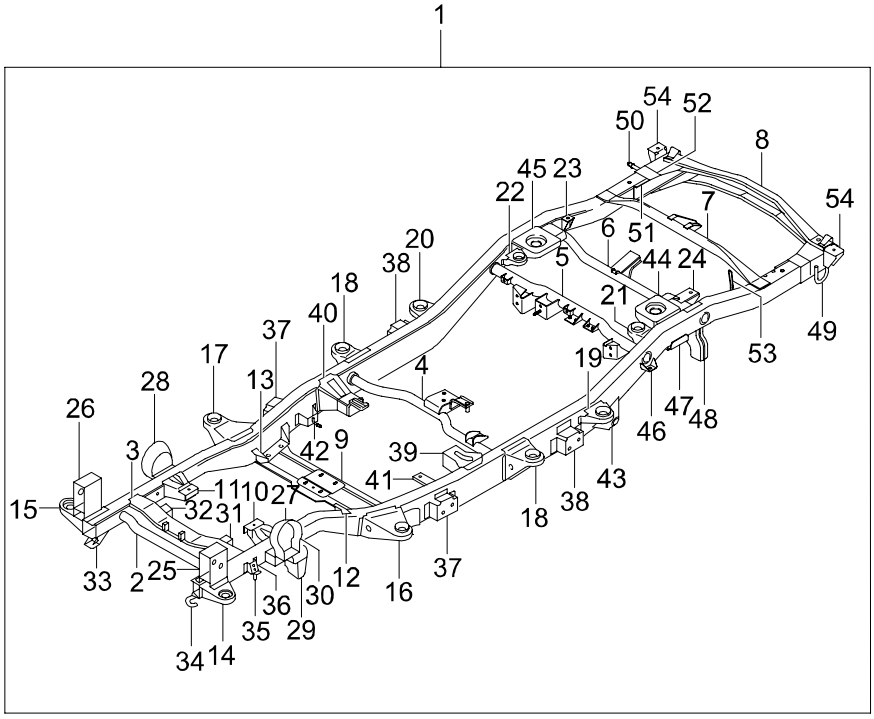
1
54
52
50
8
45
23
22
7
54
6
51
20
38
5
44
24
18
21
40
37
49
53
17
19
4
28
13
26
47
48
46
3
42
9
39
43
41
11
10
27
38
15
32
31
18
33
2
25
12
37
36
30
16
35
29
34
14

4010 FRAME

ITC	KEY NO. PART NO	PART NAME OPTION	L/R	T/M	DRV	MODEL 662LA									EFF. DATE FROM	EFF. DATE TO	REMARK
	[01]	*FRAME ASSY-CHASSIS*															
	4000007001				L	1									02'1201	03'0922	
O	4000007002				L	1									03'0923	04'0421	
O	4000007003					1									04'0422	06'0228	
	4000007052				R	1									03'0929	04'0421	
O	4000007053					1									04'0422	06'0228	
	[02]	*MEMBER ASSY-CROSS NO1*															
	4011005002					1									02'1201	06'0228	
	[03]	*MEMBER ASSY-CROSS NO2*															
	4012005100	LHD			L	1									02'1201	06'0228	
	4012005150	RHD			R	1									02'1201	06'0228	
	[04]	*MEMBER ASSY-CROSS NO3*															
	4013005301					1									02'1201	06'0228	
	[05]	*MEMBER ASSY-CROSS NO4*															
	4014007001					1									02'1201	06'0228	
	[06]	*MEMBER ASSY-CROSS NO5*															
	4015007000					1									02'1201	06'0228	
	[07]	*MEMBER ASSY-CROSS NO6*															
	4016007000					1									02'1201	03'0922	
O	4016007001					1									03'0923	06'0228	
	[08]	*MEMBER ASSY-CROSS NO7*															
	4017005006					1									02'1201	06'0228	
	[09]	*MEMBER ASSY-ENGINE MTG RR CROSS*															
	4028008000					1									02'1201	06'0228	EXTRA BRKT LH:4023005200,RH:4023505200
Y	4028008001					1									03'0421	06'0228	EXTRA BRKT LH:4023005200,RH:4023505200
	[10]	*BRKT-FRT ENGINE MTG*															
	4021005101		LH			1									02'1201	06'0228	
	[11]	*BRKT-FRT ENGINE MTG*															
	4022005101		RH			1									02'1201	06'0228	
	[12]	*BRKT-ENGINE MTG RR*															
	4023005200		LH			1									02'1201	06'0228	

4010 FRAME

ITC	KEY NO. PART NO	PART NAME OPTION	L/R	T/M	DRV	MODEL 662LA									EFF. DATE FROM	EFF. DATE TO	REMARK
	[13] 4023505200	*BRKT-ENGINE MTG RR*	RH			1									02'1201	06'0228	
	[14] 4046005000	*BRKT ASSY-BODY MTG NO1*	LH			1									02'1201	06'0228	
	[15] 4047005000	*BRKT ASSY-BODY MTG NO1*				1									02'1201	06'0228	
	[16] 4042005002	*BRKT-BODY MTG NO2*	LH			1									02'1201	06'0228	
	[17] 4049005001	*BRKT ASSY-BODY MTG NO2*	RH			1									02'1201	06'0228	
	[18] 4043005000	*BRKT-BODY MTG NO3*				2									02'1201	06'0228	
	[19] 4044005001	*BRKT ASSY-BODY MTG NO4*	LH			1									02'1201	06'0228	
	[20] 4048005001	*BRKT ASSY-BODY MTG NO4*	RH			1									02'1201	06'0228	
	[21] 4044006000	*BRKT ASSY-BODY MTG NO4*	LH			1									02'1201	06'0228	
	[22] 4048006000	*BRKT ASSY-BODY MTG NO4*	RH			1									02'1201	06'0228	
	[23] 4046007000	*BRKT ASSY-DECK MTG NO1*				1									02'1201	06'0228	
	[24] 4047007002	*BRKT ASSY-DECK MTG NO2*				1									02'1201	06'0228	
	[25] 4056005002	*BRKT ASSY-FRT BUMPER MTG*	LH			1										06'0228	
	[26] 4057005002	*BRKT ASSY-FRT BUMPER MTG*	RH			1										06'0228	
	[27] 4060705101	*BRKT ASSY-FRT UPR ARM MTG*	LH			1									02'1201	06'0228	

4010 FRAME

ITC	KEY NO. PART NO	PART NAME OPTION	L/R	T/M	DRV	MODEL 662LA									EFF. DATE FROM	EFF. DATE TO	REMARK
	[28]	*BRKT ASSY-FRT UPR ARM MTG*															
	4060805101		RH			1									02'1201	06'0228	
	[29]	*BRKT-LWR ARM MTG RR*															
	4063005000		LH			1									02'1201	06'0228	
	4064005000		RH			1									02'1201	06'0228	
	[30]	*REINF-LWR ARM MTG*															
	4034505000					2									02'1201	06'0228	
	[31]	*BRKT-FRT AXLE MTG FRT*															
	4027005000		LH			1									02'1201	06'0228	
	[32]	*BRKT-FRT AXLE MTG FRT*															
	4028005000		RH			1									02'1201	06'0228	
	[33]	*HOOK ASSY-FRT LASHING*															
	4031005001					1									02'1201	06'0228	
	[34]	*HOOK ASSY-FRT TOW*															
	4033005001					1									02'1201	06'0228	
	[35]	*BRKT-REBOUND STOPPER*															
	4067005100		LH			1									02'1201	06'0228	
	4068005100		RH			1									02'1201	06'0228	
	[36]	*BRKT-HOSE MTG FRT*															
	4037105301		LH			2									02'1201	06'0228	
	[37]	*BRKT-SIDE STEP MTG FRT*															
	4032105002		LH			1									02'1201	06'0228	
	4032205002		RH			1									02'1201	06'0228	
	[38]	*BRKT-SIDE STEP MTG RR*															
	4032305002		LH			1									02'1201	06'0228	
	4032405002		RH			1									02'1201	06'0228	
	[39]	*BRKT-HIGH CONTROL ARM MTG*															
	4065005001		LH			1									02'1201	06'0228	
	[40]	*BRKT-HIGH CONTROL ARM MTG*															
	4066005100		RH			1									02'1201	06'0228	
	[41]	*PLATE ASSY-TUBE MTG*															
	4035005100					1									02'1201	06'0228	

4010 FRAME

ITC	KEY NO. / PART NO	PART NAME / OPTION	L/R	T/M	DRV	MODEL 662LA	EFF. DATE FROM	EFF. DATE TO	REMARK
	[42] 4054005400	*BRKT ASSY-MUFFLER MTG-FRT*				1	02'1201	06'0228	
	[43] 4071107000	*BRKT-LWR ARM MTG TO FRAME*				2	02'1201	06'0228	
	[44] 4072007000	*BRKT ASSY-SPRING & SHOCK ABSORBER MTG-LH*	LH			1	02'1201	06'0228	
	[45] 4073007000	*BRKT ASSY-SPRING & SHOCK ABSORBER MTG-RH*	RH			1	02'1201	06'0228	
	[46] 4070107000	*BRKT ASSY-STABILAZER BAR TO FRAME*	LH			1	02'1201	06'0228	
	4070207000		RH			1	02'1201	06'0228	
	[47] 4074007000	*BRKT ASSY-BUMPER MTG*	LH			1	02'1201	06'0228	
	4074507000		RH			1	02'1201	06'0228	
	[48] 4076007000	*BRKT ASSY-LATERAL ROD MTG*	LH			1	02'1201	06'0228	
	[49] 4082801000	*HOOK-LASHING*				1	02'1201	06'0228	
	[50] 4054006200	*ROD-EXHAUST MTG*				1	02'1201	06'0228	
	[51] 4001807000	*EXTENSION-SIDE MEMBER INR*				2	02'1201	06'0228	
	[52] 4001707000	*EXTENSION-SIDE MEMBER OTR*				2	02'1201	06'0228	
	[53] 9442726000	*CLIP*				13	02'1201	06'0228	
	[54] 4048007000	*BRKT ASSY-DECK MTG NO3*				2	02'1201	06'0228	

4110 AXLE SHAFT

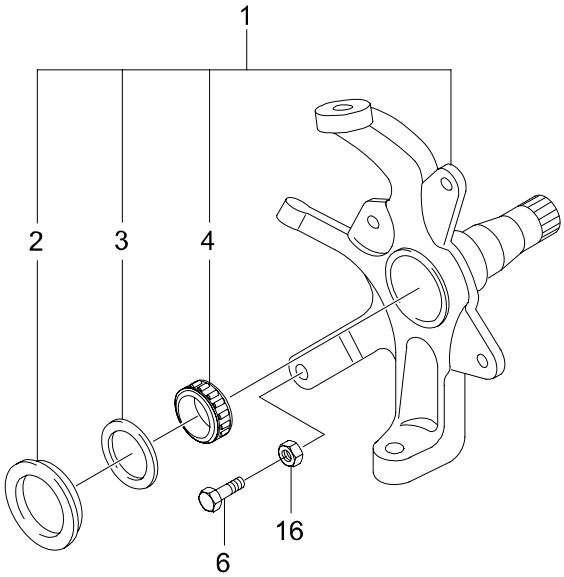

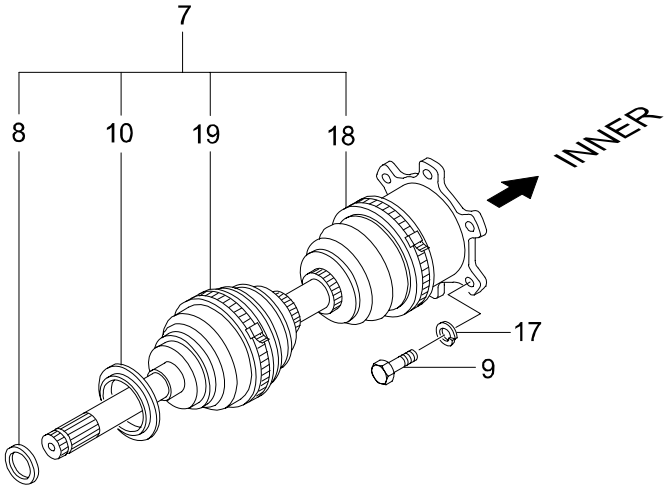

4110 AXLE SHAFT

ITC	KEY NO. PART NO	PART NAME OPTION	L/R	T/M	DRV	MODEL 662LA	EFF. DATE FROM	EFF. DATE TO	REMARK
	[01]	*KNUCKLE ASSY-STEERING*							
	4121005003		LH			1	02'1201	06'0228	
	4122005003		RH			1	02'1201	06'0228	
	4121005110		LH			1	02'1201	06'0228	2WD
	4122005110		RH			1	02'1201	06'0228	2WD
	[02]	*SEAL-OIL*							
	4121203200					2	02'1201	06'0228	
	[03]	*WASHER*							
	4121603201					2	02'1201	06'0228	
	[04]	*BEARING-KNUCKLE*							
	4121305000					2	02'1201	06'0228	
	[06]	*BOLT*							
	4121705002					2	02'1201	06'0228	
	[07]	*SHAFT ASSY-FRT AXLE*							
	4130005401					2	02'1201	04'0831	
O	4130005402					2	04'0901	06'0228	
	[08]	*SHIM*							
	4131005100					1	02'1201	06'0228	0.1T
	4131005200					1	02'1201	06'0228	0.2T
	4131005210					1	02'1201	06'0228	0.3T
	4131005220					1	02'1201	06'0228	0.5T
	4131005230					1	02'1201	06'0228	1.0T
	[09]	*BOLT*							
	4132005000					12	02'1201	06'0228	M10X1.25
	[10]	*SEAL-FRT AXLE SHAFT DUST*							
	4137401800					2	02'1201	06'0228	
	[16]	*NUT*							
	920761400D					2	02'1201	06'0228	M14X1.5
	[17]	*WASHER*							
	933101000D					12	02'1201	06'0228	
	[18]	*BOOT SET-INR*							
	413ST05401					2	02'1201	04'0831	FOR DELPIE AXLE SHAFT
O	413ST05402					2	04'0901	06'0228	FOR DELPIE AXLE SHAFT

4110 AXLE SHAFT

ITC	KEY NO. PART NO	PART NAME OPTION	L/R	T/M	DRV	MODEL 662LA									EFF. DATE FROM	EFF. DATE TO	REMARK
	[19] 413ST05411	*BOOT SET-OTR*				2									02'1201	06'0228	BOOTS+BAND L/S+GREASE

4115 FRONT HUB & DISC

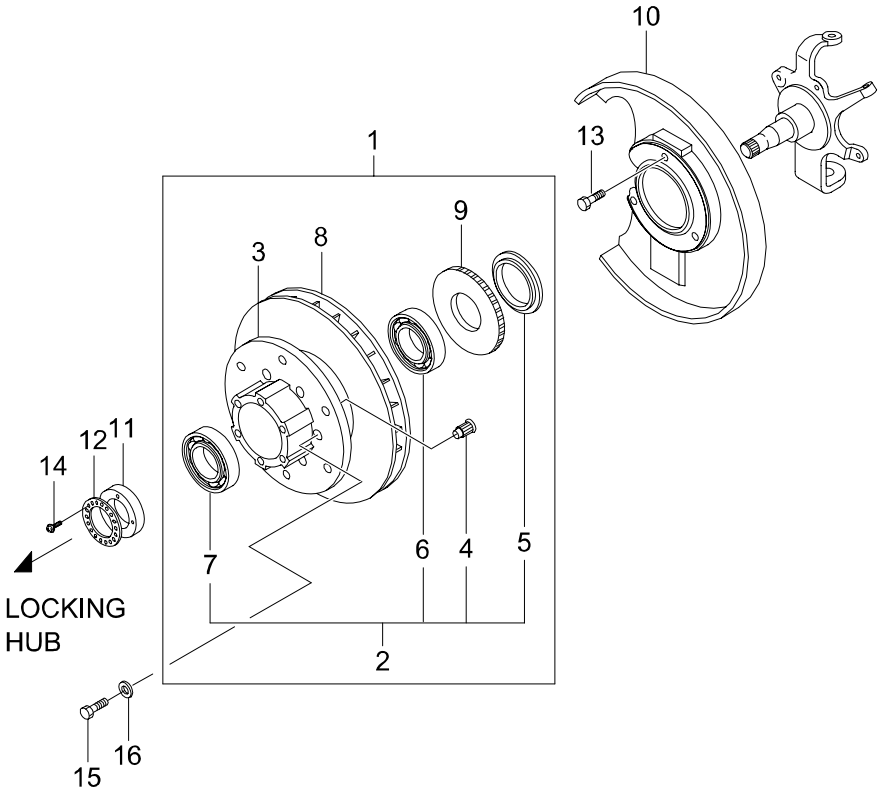

4115 FRONT HUB & DISC

ITC	KEY NO. PART NO	PART NAME OPTION	L/R	T/M	DRV	MODEL 662LA	EFF. DATE FROM	EFF. DATE TO	REMARK
	[01]	*HUB & DISC ASSY-FRT*							
	4141005005					2	02'1201	04'0627	
Y	4141005105	ABS				2	02'1201	04'1228	
Y	4141005106	ABS				2	04'1229	06'0228	
	[02]	*HUB ASSY-FRT*							
	4142005001					2	02'1201	06'0228	
	[03]	*WHEEL-FRT HUB*							
	4142105000					2	02'1201	06'0228	
	[04]	*PIN-FRT HUB WHEEL*							
	4142303002					12	02'1201	06'0228	
	[05]	*SEAL-OIL*							
	4142503203					2	02'1201	06'0228	
	[06]	*BEARING-FRT HUB INR*							
	4143103210					2	02'1201	06'0228	
	[07]	*BEARING ASSY-FRT HUB OTR*							
	4143203210					2	02'1201	06'0228	
	[08]	*DISC-FRT VENTILATION BRAKE*							
	4144106211					2	02'1201	06'0228	ORDER BY 4144106210
	[09]	*WHEEL-TOOTH ABS FRT*							
	4894105001X	ABS				2	02'1201	06'0228	
	[10]	*SHIELD-FRT DISC BRAKE DUST*							
	4145105000		LH			1	02'1201	06'0228	
	4146105000		RH			1	02'1201	06'0228	
	[11]	*NUT*							
	4153103200					2	02'1201	06'0228	
	[12]	*WASHER*							
	4153205000X					2	02'1201	06'0228	
	[13]	*BOLT*							
	957040616D					6	02'1201	06'0228	M6X1.0

4115 FRONT HUB & DISC

ITC	KEY NO. PART NO	PART NAME OPTION	L/R	T/M	DRV	MODEL 662LA									EFF. DATE FROM	EFF. DATE TO	REMARK
	[14] 9367440081	*SCREW*				6									02'1201	06'0228	M4
	[15] 912471235D	*BOLT*				6									02'1201	06'0228	M12X1.25X35
	[16] 933101200D	*WASHER*				6									02'1201	06'0228	M12

4116 LOCKING HUB

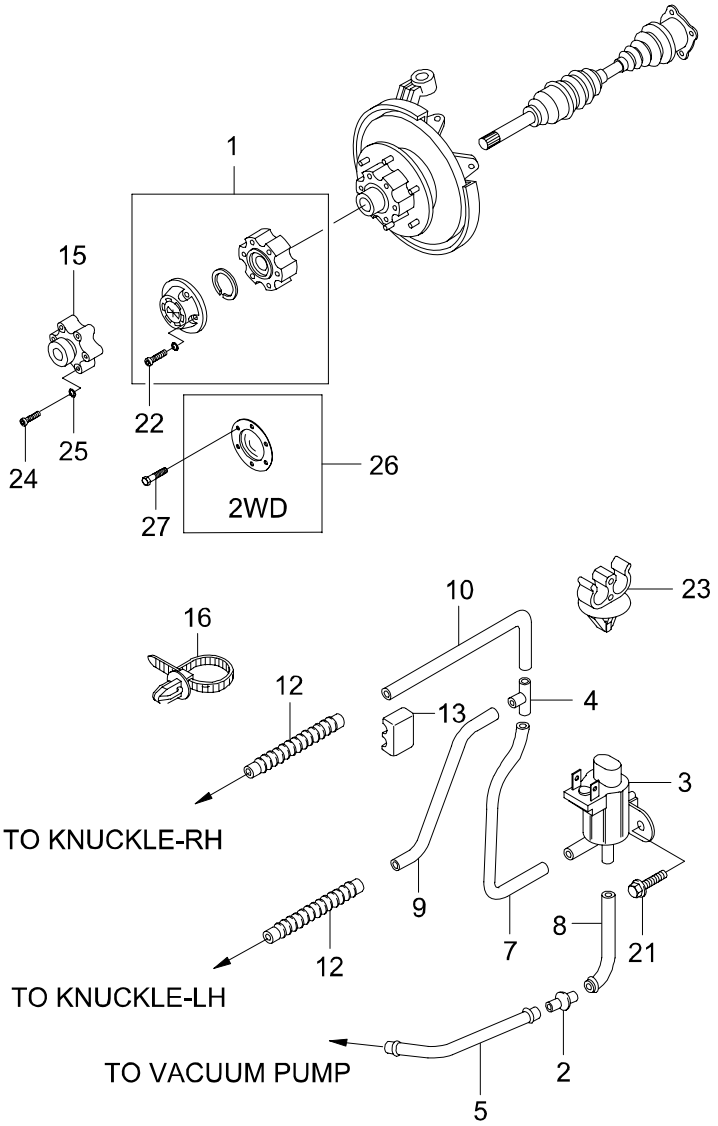

4116 LOCKING HUB

ITC	KEY NO. PART NO	PART NAME OPTION	L/R	T/M	DRV	MODEL 662LA	EFF. DATE FROM	EFF. DATE TO	REMARK
	[01]	*HUB ASSY-AUTO VACUUM LOCKING*							
	4151005101					2	02'1201	05'0425	
	4151006001					2	05'0426	06'0228	MAKER:AVM, DIFFERENT CAP SHAPE(4151005101)
	[02]	*VALVE-CHECK*							
	4154103000					1	02'1201	06'0228	
	[03]	*VALVE ASSY-SOLENOID*							
	4154205001					1	02'1201	06'0228	
	[04]	*CONNECTOR*							
	4154303000					1	02'1201	06'0228	
	[05]	*HOSE-VACUUM PUMP TO CHECK VALVE*							
	9773003050					1	02'1201	06'0228	M3X500,BLUE
	[07]	*HOSE-SOLENOID VALVE TO CONNECTOR*							
	9773003006					1	02'1201	06'0228	M3X60
	[08]	*HOSE-SOLENOID VALVE TO CONNECTOR*							
	9770003012					1	02'1201	06'0228	M6X120
	[09]	*HOSE-T CONNECTOR & HUB*							
	9773003060					1	02'1201	06'0228	M3X600
	[10]	*HOSE-T CONNECTOR & HUB*							
	9775003330					1	02'1201	06'0228	M3X2980
	[12]	*TUBE-CORRUGATED*							
	4155003001					2	02'1201	06'0228	L=100
	[13]	*CLIP*							
	4155205002X					18	02'1201	06'0228	
	[15]	*FLANGE-HUB FRT*							
	4158005010					2	02'1201	06'0228	2WD
	[16]	*BAND*							
	8295205000					10	02'1201	06'0228	
	[21]	*BOLT*							
	958040816D					1	02'1201	06'0228	M8X1.25X16

4116 LOCKING HUB

ITC	KEY NO. PART NO	PART NAME OPTION	L/R	T/M	DRV	MODEL 662LA									EFF. DATE FROM	EFF. DATE TO	REMARK
	[22] 4151105100	*BOLT-LOCKING*				12									02'1201	06'0228	
	[23] 4155103400	*HOLDER-VACCUM HOSE MTG*				5									02'1201	06'0228	
	[24] 912181040D	*BOLT* 2WD				12									02'1201	06'0228	M10X1.5X40 ,HEX
	[25] 933101000D	*WASHER*				12									02'1201	06'0228	
	[26] 4158008001	*CAP ASSY-GREASE* 2WD				2									03'0714	06'0228	
	[27] 958140820D	*BOLT*				12									03'0714	06'0228	M8X1.25X20

4120 FRONT AXLE(KSC)

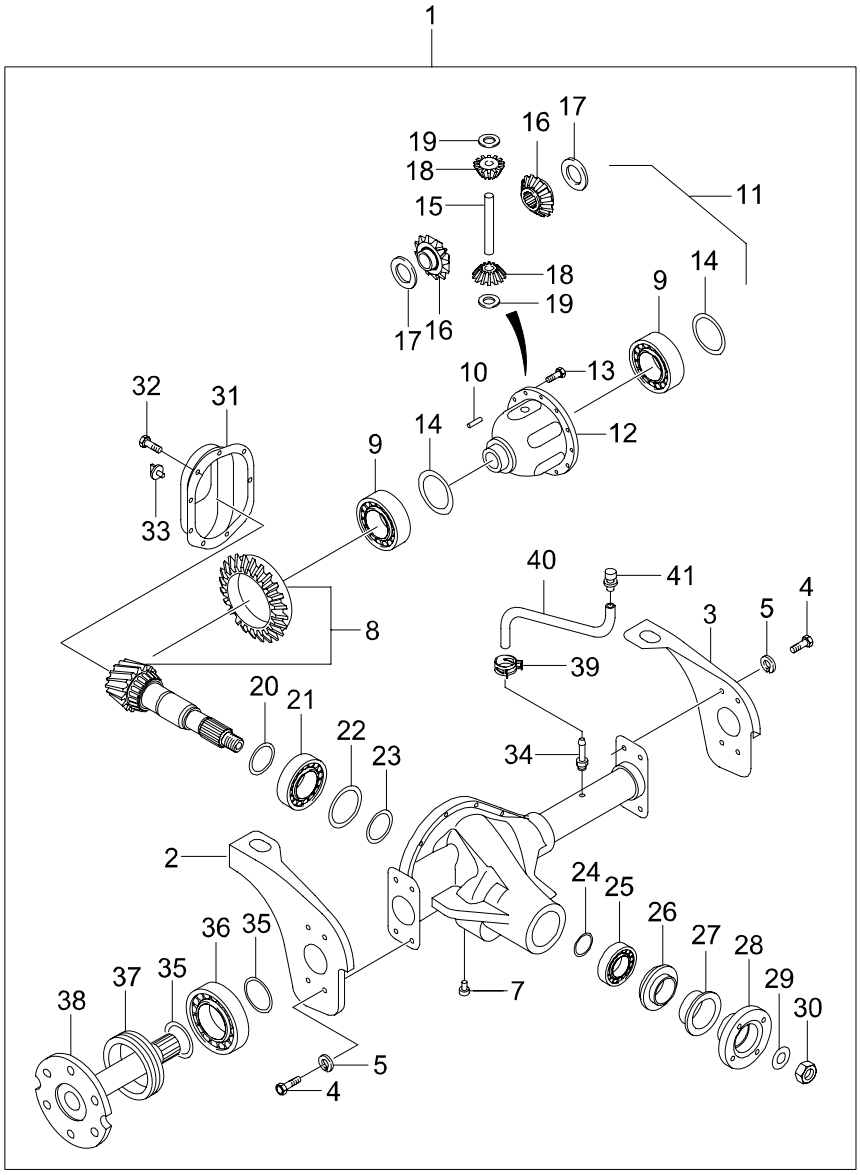

4120 FRONT AXLE(KSC)

ITC	KEY NO. PART NO	PART NAME OPTION	L/R	T/M	DRV	MODEL 662LA	EFF. DATE FROM	EFF. DATE TO	REMARK
	[01]	*AXLE ASSY-FRT*							
	4100005260	4WD		M		1	02'1201	06'0228	4.27R
	4100005060	4WD		A		1	02'1201	06'0228	4.89R
	[02]	*BRKT-FRT AXLE MTG*							
	4105005000		LH			1	02'1201	06'0228	
	[03]	*BRKT-FRT AXLE MTG*							
	4106005000		RH			1	02'1201	06'0228	
	[04]	*BOLT*							
	4109105000					8	02'1201	06'0228	M12X1.25
	[05]	*WASHER*							
	4109205000					8	02'1201	06'0228	
	[07]	*PLUG-DRAIN*							
	4104505000					1	02'1201	06'0228	
	[08]	*GEAR SET-PINION & RING*							
	4341005250			M		1	02'1201	06'0228	4.27R
	4341005290			A		1	02'1201	06'0228	4.89R
	[09]	*BEARING-DIFF SIDE*							
	4362905000					2	02'1201	06'0228	
	4363005000					2	02'1201	06'0228	
	[10]	*PIN-SHAFT LOCK*							
	4361105000					1	02'1201	06'0228	NOT AVAILABLE,SUPPLY ONLY ASSY
	[11]	*CASE ASSY-DIFF*							
	4360005000					1	02'1201	06'0228	
	[12]	*CASE-DIFF*							
	4361005000					1	02'1201	06'0228	SUPPLY ONLY ASSY 4360005000
	[13]	*BOLT-DIFF CASE*							
	4361505000					10	02'1201	06'0228	ORDER BY 4371405000
	[14]	*SHIM*							
	4361605000					1	02'1201	06'0228	T=0.01

4120 FRONT AXLE(KSC)

ITC	KEY NO. PART NO	PART NAME OPTION	L/R	T/M	DRV	MODEL 662LA									EFF. DATE FROM	EFF. DATE TO	REMARK
	[14]	*SHIM*															
	4361705000					1									02'1201	06'0228	T=0.13
	4361805000					1									02'1201	06'0228	T=0.25
	4361905000					1									02'1201	06'0228	T=0.76
	[15]	*SHAFT-DIFF*															
	4361205000					1									02'1201	06'0228	SUPPLY ONLY ASSY 4360005000
	[16]	*GEAR-DIFF SIDE*															
	4362105000					2									02'1201	06'0228	SUPPLY ONLY ASSY 4360005000
	[17]	*WASHER*															
	4362805000					1									02'1201	06'0228	T=0.8
	4362805001					1									02'1201	06'0228	T=0.9
	4362805002					1									02'1201	06'0228	T=1.0
	[18]	*GEAR-DIFF PINION*															
	4363105000					2									02'1201	06'0228	SUPPLY ONLY ASSY 4360005000
	[19]	*WASHER*															
	4368805000					1									02'1201	06'0228	
	[20]	*SLINGER-PINION INR*															
	4102605000					1									02'1201	06'0228	
	[21]	*BEARING-PINION INR*															
	4102905000					1									02'1201	06'0228	
	[22]	*SHIM*															
	4102805000					1									02'1201	06'0228	T=0.08
	4102805001					1									02'1201	06'0228	T=0.13
	4102805002					1									02'1201	06'0228	T=0.25
	[23]	*BAFFLE-PINION BEARING*															
	4102305001					1									02'1201	06'0228	
	[24]	*SHIM*															
	4102405000					1									02'1201	06'0228	T=0.08
	4102405001					1									02'1201	06'0228	T=0.13
	4102405002					1									02'1201	06'0228	T=0.25
	4102405003					1									02'1201	06'0228	T=0.76
	[25]	*BEARING-PINION OTR*															
	4101905000					1									02'1201	06'0228	

4120 FRONT AXLE(KSC)

ITC	KEY NO. PART NO	PART NAME OPTION	L/R	T/M	DRV	MODEL 662LA									EFF. DATE FROM	EFF. DATE TO	REMARK
	[26] 4102605001	*SLINGER-PINION OTR*				1									02'1201	06'0228	
	[27] 4102505000	*SEAL-OIL*				1									02'1201	06'0228	
	[28] 4102105000	*FLANGE ASSY*				1									02'1201	06'0228	
	[29] 4102705000	*WASHER*				1									02'1201	06'0228	
	[30] 4104905000	*NUT*				1									02'1201	06'0228	
	[31] 4104105100	*COVER-FRT AXLE HOUSING*				1									02'1201	06'0228	
	[32] 4104405100	*BOLT*				6									02'1201	06'0228	ORDER:4204405010
	[33] 4104305100	*PLUG-FILLER*				1									02'1201	06'0228	
	[34] 4205005000X	*PLUG-AIR VENTLATION*				1									02'1201	06'0228	
	[35] 4131405000	*RING-SNAP*				4									02'1201	06'0228	
	[36] 4131605000	*BEARING-BALL*				2									02'1201	06'0228	KOYO 60072RKNR
	[37] 4131705000	*SEAL & RING ASSY-SPACER*				2									02'1201	06'0228	
	[38] 4135005020	*SHAFT-FRT AXLE INR*	LH			1									02'1201	06'0228	3.54R
	4136005020		RH			1									02'1201	06'0228	
	[39] 9466713007	*CLAMP*				1									02'1201	06'0228	
	[40] 4103005000	*HOSE-AIR VENTLATION*				1									02'1201	06'0228	

4120 FRONT AXLE(KSC)

ITC	KEY NO. PART NO	PART NAME OPTION	L/R	T/M	DRV	MODEL 662LA									EFF. DATE FROM	EFF. DATE TO	REMARK
	[41] 4209503400X	*BREATHER-AIR*				1									02'1201	06'0228	

4121 FRONT AXLE(TONGIL)

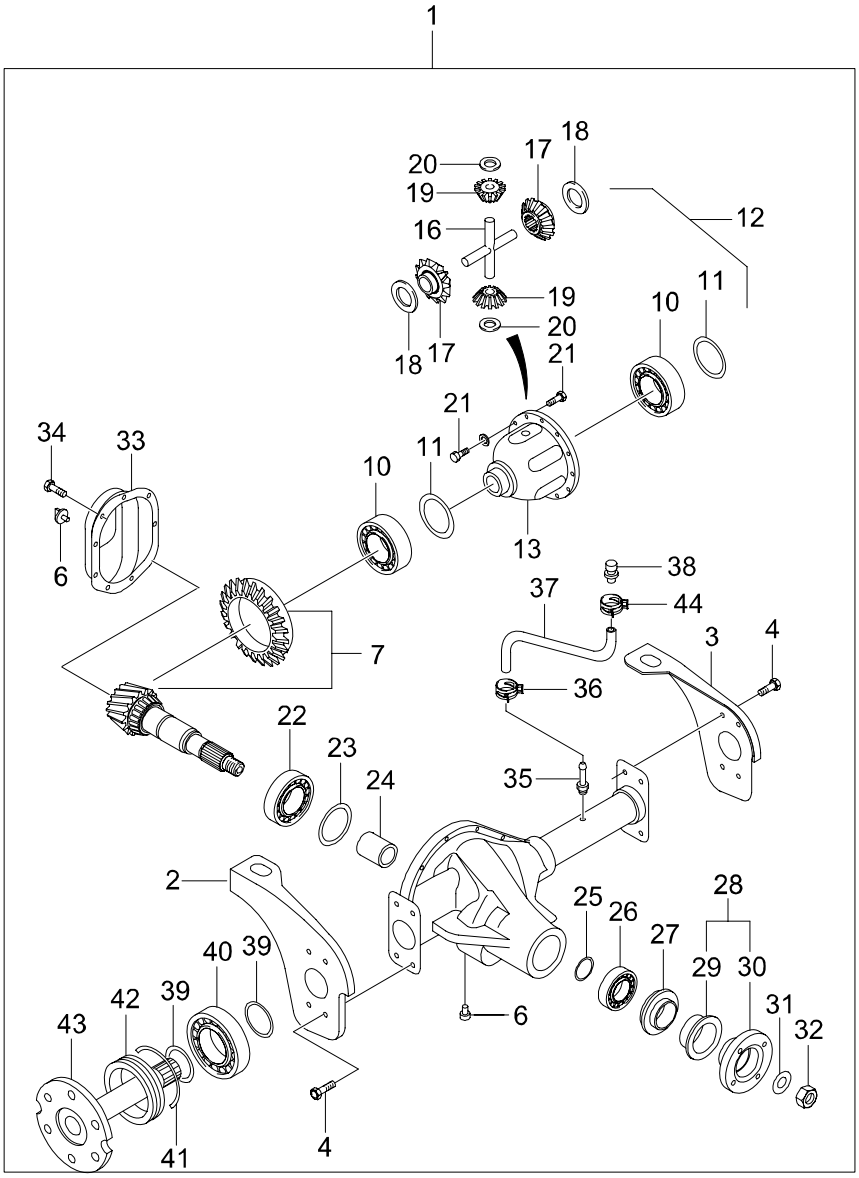

4121 FRONT AXLE(TONGIL)

ITC	KEY NO. PART NO	PART NAME OPTION	L/R	T/M	DRV	MODEL 662LA									EFF. DATE FROM	EFF. DATE TO	REMARK
	[01]	*AXLE ASSY-FRT*															
	4100005561	4WD		M		1									02'1201	06'0228	4.27R
	4100005461	4WD		A		1									02'1201	06'0228	4.89R
	[02]	*BRKT-FRT AXLE MTG*															
	4105005000		LH			1									02'1201	06'0228	
	[03]	*BRKT-FRT AXLE MTG*															
	4106005000		RH			1									02'1201	06'0228	
	[04]	*BOLT*															
	4109105600					8									02'1201	06'0228	M12X1.25
	[06]	*PLUG-DRAIN & FILLER*															
	4104505600					2									02'1201	06'0228	
	[07]	*GEAR SET*															
	4343005600			M		1									02'1201	06'0228	4.27R
	4343005620			A		1									02'1201	06'0228	4.89R
	[10]	*BEARING-DIFF SIDE*															
	4363005600					2									02'1201	06'0228	
	[11]	*SHIM*															
	4361605600					2									02'1201	06'0228	
	4361605601					2									02'1201	06'0228	T=5.96
	4361605602					2									02'1201	06'0228	T=6.01
	4361605603					2									02'1201	06'0228	T=6.06
	4361605604					2									02'1201	06'0228	T=6.11
	4361605605					2									02'1201	06'0228	T=6.16
	4361605606					2									02'1201	06'0228	T=6.21
	4361605607					2									02'1201	06'0228	T=6.26
	4361605608					2									02'1201	06'0228	T=6.31
	4361605609					2									02'1201	06'0228	T=6.36
	4361605610					2									02'1201	06'0228	T=6.41
	4361605611					2									02'1201	06'0228	T=6.46
	4361605612					2									02'1201	06'0228	T=6.52
	[12]	*CARRIER ASSY-DIFF*															
	4360005600					1									02'1201	06'0228	
	[13]	*CASE ASSY-DIFF SUB*															
	4361005600					1									02'1201	06'0228	

4121 FRONT AXLE(TONGIL)

ITC	KEY NO. PART NO	PART NAME OPTION	L/R	T/M	DRV	MODEL 662LA									EFF. DATE FROM	EFF. DATE TO	REMARK
	[16] 4361205610	*PIN*				1									02'1201	06'0228	
	[17] 4361205600	*GEAR-DIFF SIDE*				2									02'1201	06'0228	
	[18] 4362805600	*WASHER*				2									02'1201	06'0228	
	[19] 4363105600	*GEAR-DIFF PINION*				4									02'1201	06'0228	
	[20] 4363805600	*WASHER*				4									02'1201	06'0228	
	[21] 4361505600	*BOLT*				10									02'1201	06'0228	
	[22] 4102905600	*BEARING-PINION INR*				1									02'1201	06'0228	
	[23]	*SHIM*															
	4102805601					1									02'1201	06'0228	T=0.08
	4102805602					1									02'1201	06'0228	T=0.13
	4102805603					1									02'1201	06'0228	T=0.25
	4102805604					1									02'1201	06'0228	T=0.76
	[24] 4102305600	*SPACER-PINION BEARING*				1									02'1201	06'0228	T=34.47
	[25]	*SHIM*															
	4102405601					1									02'1201	06'0228	T=0.076
	4102405602					1									02'1201	06'0228	T=0.127
	4102405603					1									02'1201	06'0228	T=0.15
	4102405604					1									02'1201	06'0228	T=0.25
	4102405605					1									02'1201	06'0228	T=0.8
	[26] 4102605600	*BEARING-PINION OTR*				1									02'1201	06'0228	
	[27] 4102505600	*SEAL-PINION OIL*				1									02'1201	06'0228	
	[28] 4102105600	*FLANGE ASSY*				1									02'1201	06'0228	

4121 FRONT AXLE(TONGIL)

ITC	KEY NO. PART NO	PART NAME OPTION	L/R	T/M	DRV	MODEL 662LA									EFF. DATE FROM	EFF. DATE TO	REMARK
	[29] 4102105610	*COVER-DUST*				1									02'1201	06'0228	
	[30] 4102105620	*FLANGE-COMPANION*				1									02'1201	06'0228	
	[31] 4102705600	*WASHER*				1									02'1201	06'0228	
	[32] 4104905600	*NUT*				1									02'1201	06'0228	
	[33] 4104105600	*COVER-FRT AXLE HOUSING*				1									02'1201	06'0228	
	[34] 4104405600	*BOLT*				8									02'1201	06'0228	L=14
	[35] 4205005000X	*PLUG-AIR VENTLATION*				1									02'1201	06'0228	
	[36] 9466713007	*CLAMP*				1									02'1201	06'0228	
	[37] 4103005000	*HOSE-AIR VENTLATION*				1									02'1201	06'0228	
	[38] 4209503400X	*BREATHER-AIR*				1									02'1201	06'0228	
	[39] 4131405600	*RING-SNAP*				2									02'1201	06'0228	
	[40] 4131605600	*BEARING-BALL*				2									02'1201	06'0228	
	[41] 4135105600	*RING-O*				2									02'1201	06'0228	
	[42] 4131705600	*SEAL-OIL*				2									02'1201	06'0228	
	[43] 4135005610	*SHAFT-DRIVE INR*	LH			1									02'1201	06'0228	
	4136005610		RH			1									02'1201	06'0228	

4121 FRONT AXLE(TONGIL)

ITC	KEY NO. PART NO	PART NAME OPTION	L/R	T/M	DRV	MODEL 662LA									EFF. DATE FROM	EFF. DATE TO	REMARK
	[44] 4204005000X	*CLIP*				1									02'1201	06'0228	

4170 TIRE & WHEEL DISC

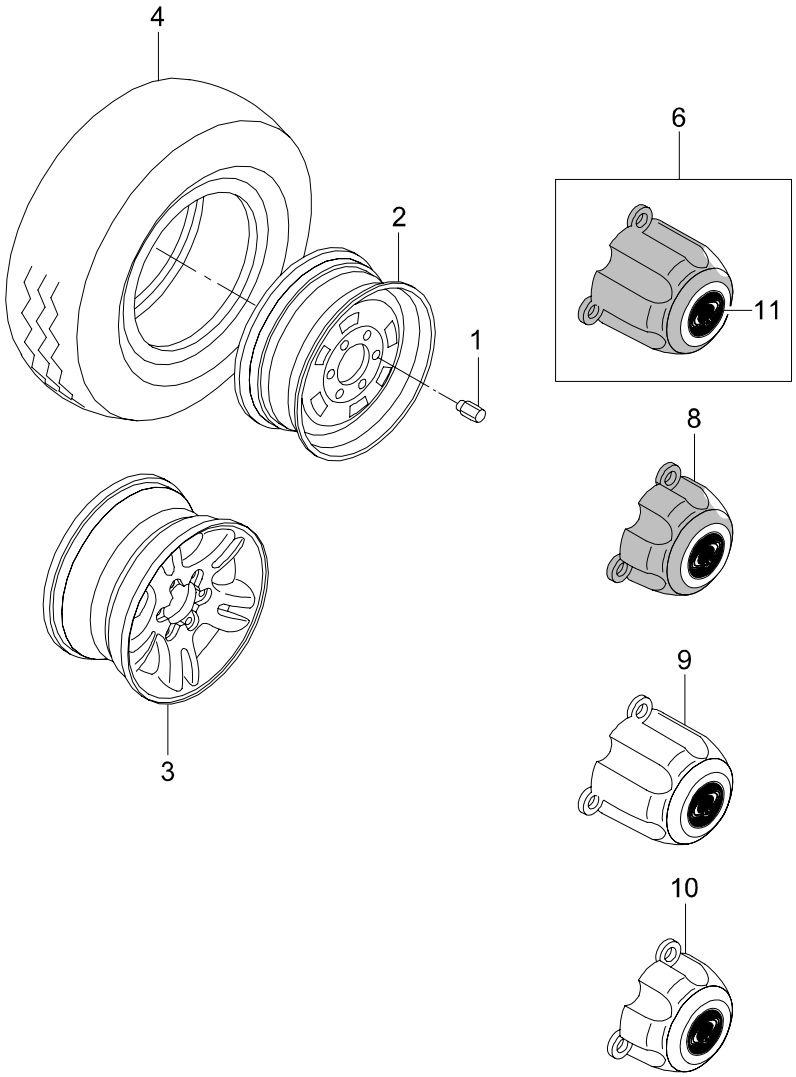

4170 TIRE & WHEEL DISC

ITC	KEY NO. PART NO	PART NAME OPTION	L/R	T/M	DRV	MODEL 662LA	EFF. DATE FROM	EFF. DATE TO	REMARK
	[01]	*NUT*							
	4173503011					24	02'1201	06'0228	CHROME FINISH
	[02]	*WHEEL-STEEL*							
	4173007000	6.5JJ*16				5	02'1201	06'0228	P235/70R16 TIRE
	[03]	*DISC ASSY-WHEEL*							
	41730065A0	7JJ X 16-5 SPOKE				5	02'1201	06'0228	DOORAY,NARROW SPOKE HOLE(14.5MM)
	4173006540	7JJ X 16 - 5SPOKE				5	02'1201	02'1201	ASA,WIDE SPOKE HOLE(18.7MM)
O	4173006530	7JJ X 16 - 5SPOKE				5	02'1201	06'0228	DOORAY,WIDE SPOKE HOLE(21.5MM)
	[04]	*TIRE*							
	4171208210	P235/70R16				5	02'1201	06'0228	
	4171208310	P255/65R16				5	02'1201	06'0228	
	[06]	*CAP-FRT HUB*							
	4177006022	STEEL WHEEL				2	02'1201	02'1226	BLACK
O	4177006023	STEEL WHEEL				2	02'1227	06'0228	BLACK
	[08]	*CAP-RR HUB*							
	4178006022	STEEL WHEEL				2	02'1201	02'1226	BLACK
O	4178006023	STEEL WHEEL				2	02'1227	06'0228	BLACK
	[09]	*CAP-FRT HUB*							
	4177006122	ALLOY WHEEL				2	02'1201	02'1226	BRIGHT
O	4177006123	ALLOY WHEEL				2	02'1227	06'0228	BRIGHT
	[10]	*CAP-RR HUB*							
	4178006122	ALLOY WHEEL				2	02'1201	02'1226	BRIGHT
O	4178006123	ALLOY WHEEL				2	02'1227	06'0228	BRIGHT
	[11]	*EMBLEM-HUB CAP*							
	4177306022					4	02'1201	02'1226	
O	4177306023					4	02'1227	06'0228	

4180 SPARE TIRE & CARRIER

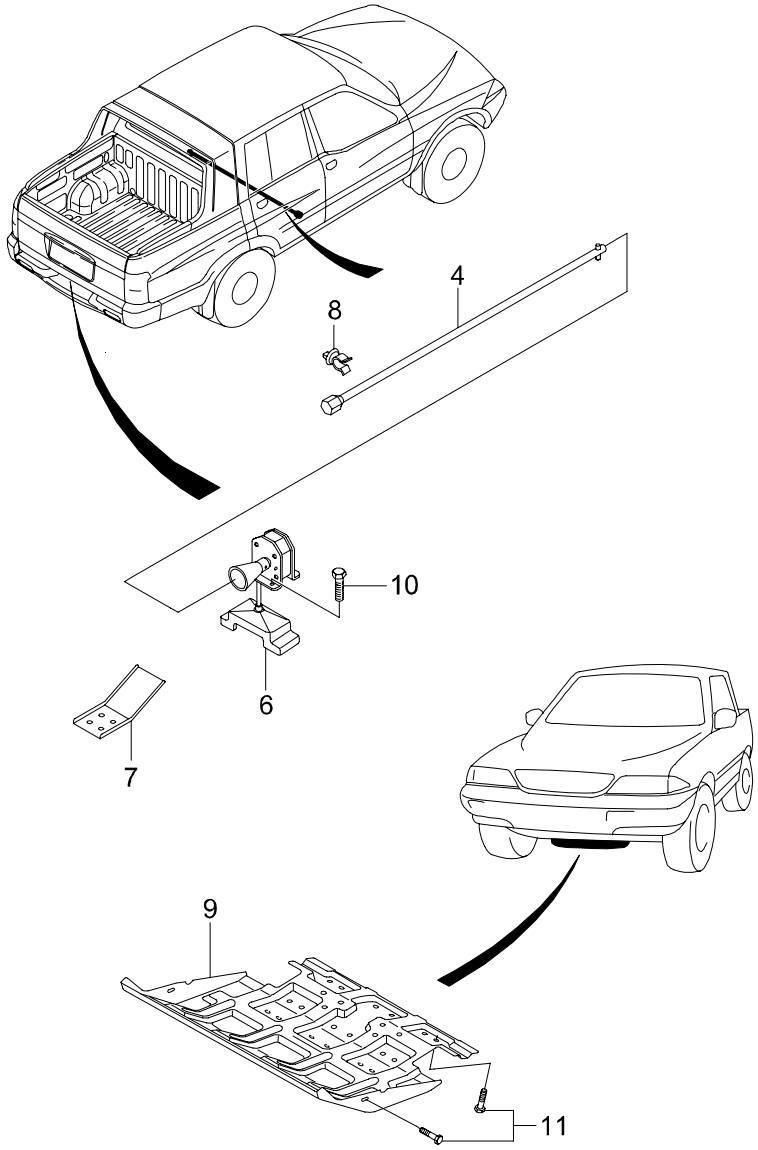

4180 SPARE TIRE & CARRIER

ITC	KEY NO. PART NO	PART NAME OPTION	L/R	T/M	DRV	MODEL 662LA									EFF. DATE FROM	EFF. DATE TO	REMARK
	[04]	*HANDLE ASSY-SPARE TIRE MTG*															
	4083008000					1									02'1201	06'0228	L=690MM
	[06]	*WINCH ASSY-SPARE TIRE*															
	4084005051					1									02'1201	06'0214	
Y	4084008000					1									06'0215	06'0228	TECA
	[07]	*STOPPER-SPARE TIRE*															
	4085505051		LH			1									02'1201	06'0228	
	4085605051		RH			1									02'1201	06'0228	
	[08]	*HOLDER-SPARE TIRE HANDLE*															
	4082105000					2									02'1201	06'0228	
	[09]	*PLATE-SKID*															
	4087105006					1									02'1201	06'0228	
	[10]	*BOLT*															
	958170825D					6									02'1201	06'0228	M8X1.25X25
	[11]	*BOLT*															
	959371030D					6									02'1201	06'0228	M10X1.25X30

4210 REAR AXLE(KSC)

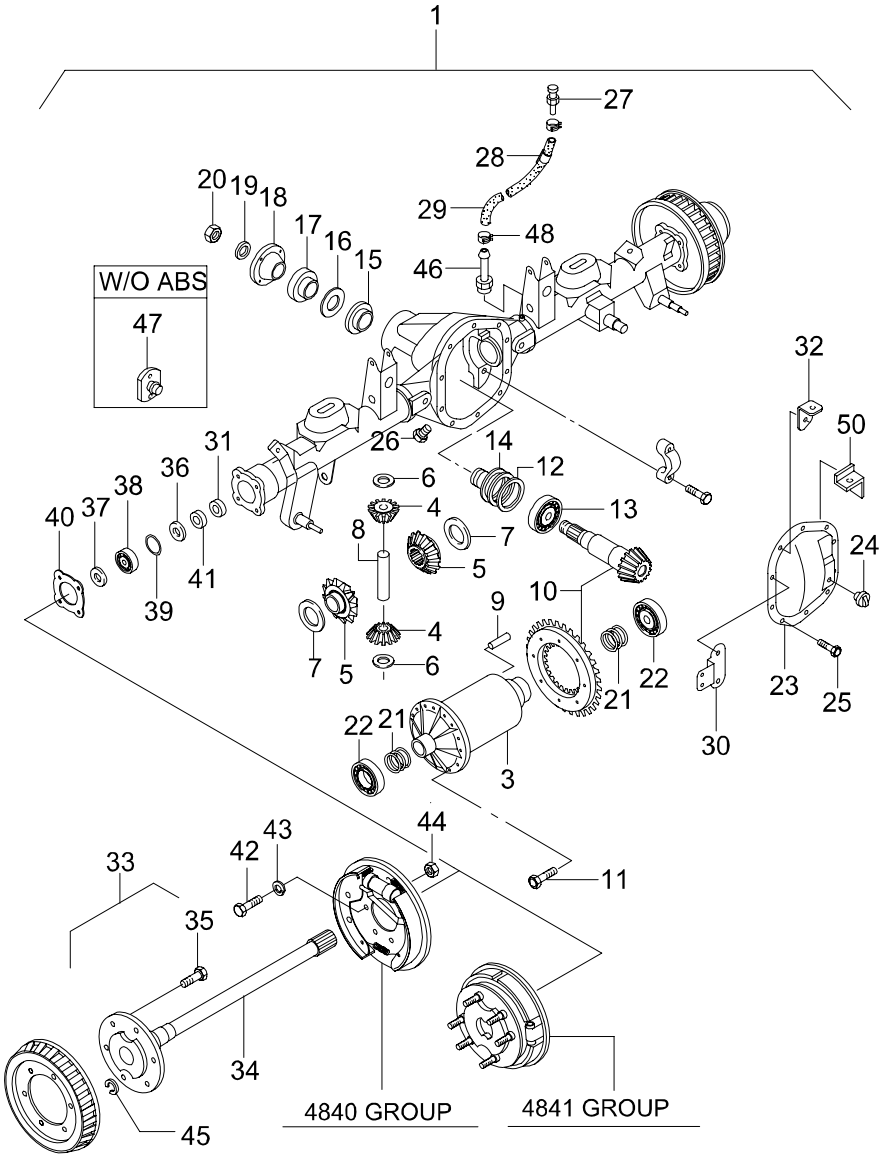

4210 REAR AXLE(KSC)

ITC	KEY NO. PART NO	PART NAME OPTION	L/R	T/M	DRV	MODEL 662LA									EFF. DATE FROM	EFF. DATE TO	REMARK
	[01]	*AXLE ASSY-RR*															
	4200005K20	DISC(ABS)		M		1									02'1201	06'0228	4.27R
	4200005K60	DISC(ABS)		A		1									02'1201	06'0228	4.89R
	4200005M50	2WD LSD,DISC		A		1									02'1201	03'0102	4.89R
Y	4200005M51	2WD LSD,DISC		A		1									03'0103	06'0228	4.89R
	4200005K81	A/T,DISC,LSD		A		1									03'0103	03'0904	4.89R
O	4200005K82	A/T,DISC,LSD		A		1									03'0905	06'0228	4.89R
	4200005K40	DISC,LSD,ABS				1									02'0901	02'1217	4.27R
O	4200005K41	DISC,LSD,ABS				1									02'1218	03'0408	4.27R
O	4200005K42	DISC,LSD,ABS				1									03'0409	05'0227	4.27R
O	4200005K43	DISC,LSD,ABS				1									05'0228	06'0228	4.27R
	[03]	*CASE ASSY-DIFF*															
	4371005000					1									02'1201	06'0228	CASE ONLY
	4371005250					1									02'1201	06'0228	WITH DIFFERENTIAL GEAR
	4371005230	LSD				1									02'1201	06'0228	R4.27,R4.89
	[04]	*PINION-DIFF*															
	4373105000					2									02'1201	06'0228	
	[05]	*GEAR-DIFF*															
	4373205000					2									02'1201	06'0228	
	[06]	*WASHER*															
	4372105000					2									02'1201	06'0228	
	[07]	*WASHER*															
	4371805000					2									02'1201	06'0228	
	[08]	*SHAFT-DIFF*															
	4371205000					1									02'1201	06'0228	
	[09]	*PIN-SHAFT LOCK*															
	4361105000					1									02'1201	06'0228	NOT AVAILABLE,SUPPLY ONLY ASSY
	[10]	*PINION & GEAR ASSY*															
	4342005310					1									02'1201	06'0228	4.27R
	4342005A10					1									02'1201	06'0228	4.89R
	[11]	*BOLT*															
	4371405000					10									02'1201	06'0228	

4210 REAR AXLE(KSC)

ITC	KEY NO. PART NO	PART NAME OPTION	L/R	T/M	DRV	MODEL 662LA									EFF. DATE FROM	EFF. DATE TO	REMARK
	[12]	*SHIM*															
	4372805000					1									02'1201	06'0228	T=0.08
	4372805001					1									02'1201	06'0228	T=0.12
	4372805002					1									02'1201	06'0228	T=0.25
	4372805003					1									02'1201	06'0228	T=0.80
	[13]	*BEARING-PINION INR*															
	4202905000					1									02'1201	06'0228	
	[14]	*SHIM*															
	4203905000					1									02'1201	06'0228	T=0.08
	4203905001					1									02'1201	06'0228	T=0.12
	4203905002					1									02'1201	06'0228	T=0.25
	4203905003					1									02'1201	06'0228	T=0.80
	[15]	*BEARING-PINION OTR*															
	4201905000					1									02'1201	06'0228	
	[16]	*SLINGER-PINION OTR*															
	4102605001					1									02'1201	06'0228	
	[17]	*SEAL-OIL*															
	4202505000					1									02'1201	06'0228	
	[18]	*FLANGE-COMPANION*															
	4202105000					1									02'1201	06'0228	
	[19]	*WASHER*															
	4102705000					1									02'1201	06'0228	
	[20]	*NUT*															
	4104905000					1									02'1201	06'0228	
	[21]	*SHIM*															
	4203805000					1									02'1201	06'0228	T=0.08
	4203805001					1									02'1201	06'0228	T=0.12
	4203805002					1									02'1201	06'0228	T=0.25
	4203805003					1									02'1201	06'0228	T=0.80
	[22]	*BEARING-DIFF SIDE*															
	4372905000					2									02'1201	06'0228	25590
	[23]	*COVER ASSY-CARRIER*															
	4201405000					1									02'1201	06'0228	SRC:30048890, STEEL

4210 REAR AXLE(KSC)

ITC	KEY NO. PART NO	PART NAME OPTION	L/R	T/M	DRV	MODEL 662LA									EFF. DATE FROM	EFF. DATE TO	REMARK
	[24]	*PLUG-PIPE*															
	4204305000					1									02'1201	06'0228	
	[25]	*BOLT*															
	4204405000					10									02'1201	06'0228	STEEL
	[26]	*PLUG-DRAIN MAGNET*															
	4204605000					1									02'1201	06'0228	
	[27]	*BREATHER-AIR*															
	4209503400X					1									02'1201	06'0228	
	[28]	*CLIP*															
	4204005000X					1									02'1201	06'0228	
	[29]	*HOSE-AIR VENTLATION RR*															
	4203005000					1									02'1201	06'0228	
	[30]	*BRKT-LCRV ROD MTG*															
	4923205000					1									02'1201	06'0228	
	[31]	*SEAL-OIL*															
	4242605000					2									02'1201	06'0228	
	[32]	*BRKT-3WAY CONNECTOR MTG*															
	4279005001					1									02'1201	06'0228	
	[33]	*SHAFT ASSY-RR AXLE*															
	4230105220	DISC(ABS)	LH			1									02'1201	06'0228	
	4230205220	DISC(ABS)	RH			1									02'1201	06'0228	L=762MM, 30P
	[34]	*SHAFT-FLANGE AXLE*															
	4230005000					2									02'1201	06'0228	
	[35]	*BOLT*															
	4242205000					12									02'1201	06'0228	
	[36]	*RING-SNAP*															
	4243305000					2									02'1201	06'0228	T=2.23
	4243305001					2									02'1201	06'0228	T=2.08
	4243305002					2									02'1201	06'0228	T=1.87
	4243305003					2									02'1201	06'0228	T=1.69
	4243305004					2									02'1201	06'0228	T=1.53

4210 REAR AXLE(KSC)

ITC	KEY NO. PART NO	PART NAME OPTION	L/R	T/M	DRV	MODEL 662LA	EFF. DATE FROM	EFF. DATE TO	REMARK
	[37] 4242505001	*SEAL-OIL*				2	02'1201	06'0228	
	[38] 4243105000	*BEARING-HUB OTR*				2	02'1201	06'0228	
	[39] 4243205000	*RING-RETAINING*				2	02'1201	06'0228	
	[40] 4242305000	*RETAINER-OIL SEAL*				2	02'1201	06'0228	
	[41] 4894205000	*WHEEL-TOOTH ABS RR*				2	02'1201	06'0228	
	[42] 4243505000	*BOLT*				8	02'1201	06'0228	
	[43] 4253605000	*WASHER*				8	02'1201	06'0228	
	[44] 4253705000	*NUT*				8	02'1201	06'0228	
	[45] 4253805000	*PLUG-EXPANTION*				4	02'1201	06'0228	
	[46] 4205005000X	*PLUG-AIR VENTLATION*				1	02'1201	06'0228	
	[47] 4202005000X	*PROTECTOR ASSY-ABS HOLD MTG*				2	02'1201	06'0228	
	[48] 9466713007	*CLAMP*				1	02'1201	06'0228	
	[50] 4279005100	*BRKT-2WAY CONNECTOR MTG*				1	02'1201	06'0228	

4211 REAR AXLE(TONGIL)

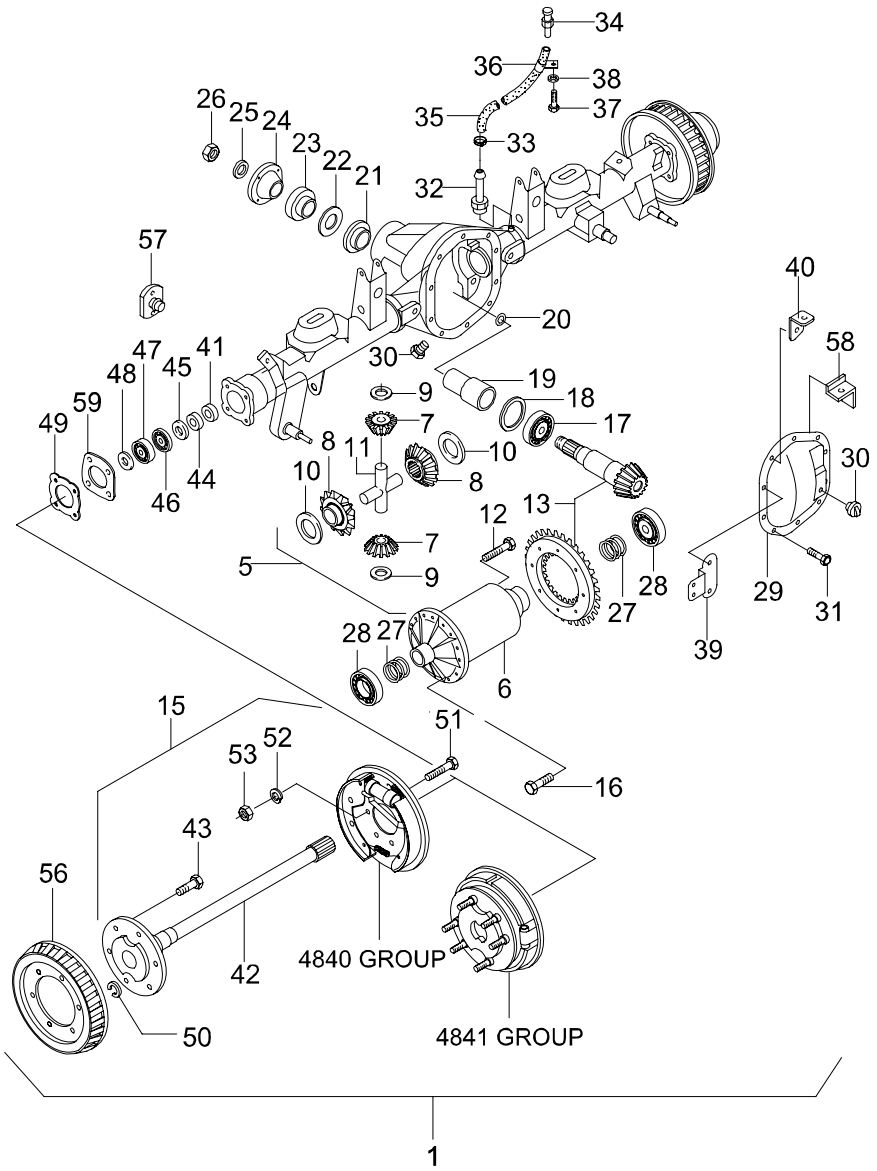

4211 REAR AXLE(TONGIL)

ITC	KEY NO. PART NO	PART NAME OPTION	L/R	T/M	DRV	MODEL 662LA									EFF. DATE FROM	EFF. DATE TO	REMARK
	[01]	*AXLE ASSY-RR*															
	4200005E21	DISC(ABS)		M		1									02'1201	06'0228	4.27R
	4200005E31	DISC		M		1									02'0901	03'0717	
O	4200005E32	DISC		M		1									03'0718	05'0227	4.27R
O	4200005E33	DISC		M		1									05'0228	06'0228	4.27R
	4200005E61	DISC		A		1									02'1201	06'0228	
	[05]	*DIFF ASSY*															
	4373005610	LSD				1									02'1201	06'0228	NOT AVAILABLE,SUPPLY AXLE ASSY
	[06]	*CASE ASSY-DIFF SUB*															
	4371005600					1									02'0901	06'0228	NOT AVAILABLE,SUPPLY AXLE ASSY
	4371005610	LSD				1									02'0901	06'0228	NOT AVAILABLE,SUPPLY AXLE ASSY
	[07]	*PINION-DIFF*															
	4373105600					4									02'1201	06'0228	T=16
	4373105610					4									02'1201	06'0228	T=10
	[08]	*GEAR-DIFF SIDE*															
	4373205600					2									02'1201	06'0228	T=10
	4373205610					2									02'1201	06'0228	T=16
	[09]	*WASHER*															
	4372105600					4									02'1201	06'0228	
	4372105610					4									02'1201	06'0228	
	[10]	*WASHER*															
	4371805630					1									02'1201	06'0228	T=0.90
	4371805640					1									02'1201	06'0228	T=0.95
	4371805660					1									02'1201	06'0228	T=1.05
	[11]	*PIN*															
	4371205600					1									02'1201	06'0228	
	4371205610					1									02'1201	06'0228	
	[12]	*BOLT*															
	4361105600					8									02'1201	06'0228	
	[13]	*PINION & GEAR ASSY*															
	4342005800			M		1									02'1201	06'0228	4.27R
	4342005D20			A		1									02'1201	06'0228	4.89R

4211 REAR AXLE(TONGIL)

ITC	KEY NO. PART NO	PART NAME OPTION	L/R	T/M	DRV	MODEL 662LA									EFF. DATE FROM	EFF. DATE TO	REMARK
	[15]	*SHAFT ASSY-RR AXLE*															
	4230105660	DISC(ABS)	LH			1									02'1201	06'0228	TEETH:30
	4230205660	DISC(ABS)	RH			1									02'1201	06'0228	TEETH:30
	[16]	*BOLT*															
	4371405600					10									02'1201	06'0228	
	[17]	*BEARING-PINION INR*															
	4203005600					1									02'1201	06'0228	
	[18]	*SHIM*															
	4372805610					1									02'1201	06'0228	T=0.08
	4372805620					1									02'1201	06'0228	T=0.12
	[19]	*SPACER-PINION BEARING*															
	4373805610					1									02'1201	06'0228	T=60.00
	4373805620					1									02'1201	06'0228	T=60.15
	4373805630					1									02'1201	06'0228	T=60.30
	[20]	*SHIM*															
	4203905601					1									02'1201	06'0228	T=4.80
	4203905602					1									02'1201	06'0228	T=4.82
	4203905603					1									02'1201	06'0228	T=4.84
	4203905604					1									02'1201	06'0228	T=4.86
	4203905605					1									02'1201	06'0228	T=4.88
	4203905606					1									02'1201	06'0228	T=4.90
	4203905607					1									02'1201	06'0228	T=4.92
	4203905608					1									02'1201	06'0228	T=4.94
	4203905609					1									02'1201	06'0228	T=4.96
	4203905610					1									02'1201	06'0228	T=4.98
	4203905611					1									02'1201	06'0228	T=5.00
	4203905612					1									02'1201	06'0228	T=5.02
	4203905613					1									02'1201	06'0228	T=5.04
	[21]	*BEARING-PINION OTR*															
	4202005600					1									02'1201	06'0228	
	[22]	*SLINGER-OIL*															
	4202605600					1									02'1201	06'0228	
	[23]	*SEAL-OIL*															
	4202505600					1									02'1201	06'0228	

4211 REAR AXLE(TONGIL)

ITC	KEY NO. PART NO	PART NAME OPTION	L/R	T/M	DRV	MODEL 662LA									EFF. DATE FROM	EFF. DATE TO	REMARK
	[24]	*FLANGE-COMPANION*															
	4202105600					1									02'1201	03'0717	SPLINE: 10T
N	4202105601					1									03'0718	05'1231	SPLINE: 27T
	[25]	*WASHER*															
	4102705600					1									02'1201	06'0228	
	[26]	*NUT*															
	4104905600					1									02'1201	06'0228	
	[27]	*SHIM*															
	4203805601					1									02'1201	06'0228	T=0.08
	4203805602					1									02'1201	06'0228	T=0.12
	4203805603					1									02'1201	06'0228	T=0.25
	4203805604					1									02'1201	06'0228	T=0.80
	[28]	*BEARING-DIFF SIDE*															
	4372905600					2									02'1201	06'0228	
	[29]	*COVER ASSY-CARRIER*															
	4201405600					1									02'1201	06'0228	STEEL
	[30]	*PLUG-FILLER DRAIN*															
	4204605600					2									02'1201	06'0228	
	[31]	*BOLT*															
	4204405600					10									02'1201	06'0228	STEEL
	[32]	*CONNECTOR*															
	4205005600X					1									02'1201	06'0228	
	[33]	*CLAMP*															
	9466713007					2									02'1201	06'0228	
	[34]	*BREATHER-AIR*															
	4209503400X					1									02'1201	06'0228	
	[35]	*HOSE-AIR VENTLATION RR*															
	4203005000					1									02'1201	06'0228	
	[36]	*CLIP*															
	4204005600					1									02'1201	06'0228	
	[37]	*BOLT*															
	4204105600					1									02'1201	06'0228	

4211 REAR AXLE(TONGIL)

ITC	KEY NO. PART NO	PART NAME OPTION	L/R	T/M	DRV	MODEL 662LA									EFF. DATE FROM	EFF. DATE TO	REMARK
	[38] 4204105610	*WASHER*				1									02'1201	06'0228	
	[39] 4923205600	*BRKT-LCRV ROD MTG*				1									02'1201	06'0228	
	[40] 4279005600	*BRKT-3WAY CONNECTOR MTG*				2									02'1201	06'0228	
	[41] 4242605600	*SEAL-OIL*				2									02'1201	06'0228	
	[42] 42300056A0	*SHAFT-AXLE*				2									02'1201	06'0228	30 TEETH
	[43] 4242205600	*BOLT*				12									02'1201	06'0228	
	[44] 4294205600	*RING-ABS SENSOR*				2									02'1201	06'0228	DISC
	[45] 4243305600	*RING-SNAP*				2									02'1201	06'0228	
	[46] 4243205600	*RING-RETAINING*				2									02'1201	06'0228	
	[47] 4243105600	*BEARING-HUB OTR*				2									02'1201	06'0228	TIMKEN U399
	[48] 4242505600	*SEAL-HUB OTR*				2									02'1201	06'0228	
	[49] 4242305600	*COVER-SEAL DUST*				2									02'1201	06'0228	
	[50] 4253805600	*COVER-AXLE SHAFT*				4									02'1201	06'0228	
	[51] 4243505600	*BOLT*				8									02'1201	06'0228	
	[52] 4253605600	*WASHER*				8									02'1201	06'0228	

4211 REAR AXLE(TONGIL)

ITC	KEY NO. PART NO	PART NAME OPTION	L/R	T/M	DRV	MODEL 662LA									EFF. DATE FROM	EFF. DATE TO	REMARK
	[53] 4253705600	*NUT*				8									02'1201	06'0228	
	[56] 4831105600	*DRUM-BRAKE*				2									02'1201	06'0228	
	[57] 4202005000X	*PROTECTOR ASSY-ABS HOLD MTG*				2									02'1201	06'0228	
	[58] 4279005100	*BRKT-2WAY CONNECTOR MTG*				1									02'1201	06'0228	
	[59] 4242405700	*RETAINER-OIL SEAL*				1									02'1201	06'0228	

4310 FRONT AXLE MOUNTING

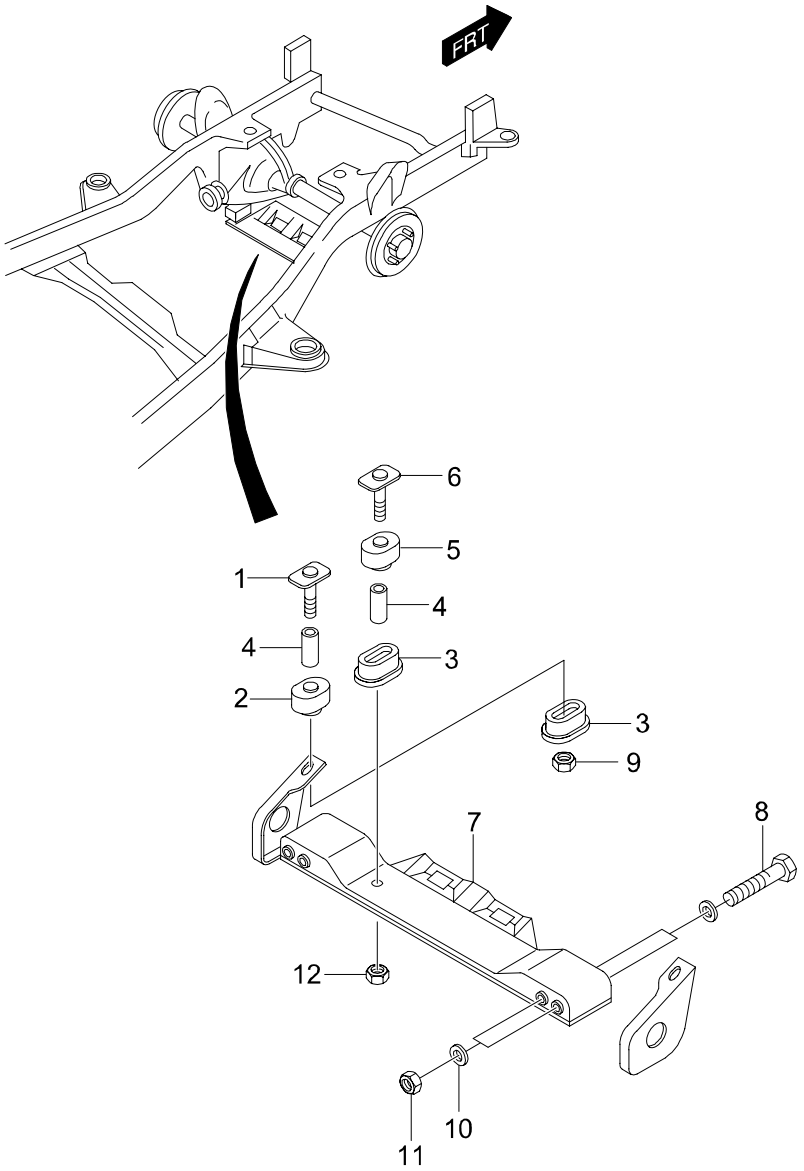

4310 FRONT AXLE MOUNTING

ITC	KEY NO. PART NO	PART NAME OPTION	L/R	T/M	DRV	MODEL 662LA	EFF. DATE FROM	EFF. DATE TO	REMARK
	[01] 4107008000	*BOLT-FRT AXLE MTG*				2	02'1201	06'0228	L=67MM
	[02] 4160108000	*BUSH-FRT AXLE MTG UPR*				2	02'1201	06'0228	
	[03] 4160308000	*BUSH-FRT AXLE MTG LWR*				3	02'1201	06'0228	
	[04] 4161205000	*SPACER-FRT AXLE MTG*				3	02'1201	06'0228	L=37MM
	[05] 4160508000	*BUSH-FRT AXLE MTG RR UPR*				1	02'1201	06'0228	
	[06] 4164005000	*BOLT-FRT AXLE MTG*				1	02'1201	05'1110	L=110
O	4164008000					1	05'1111	06'0228	
	[07] 4162005002	*MEMBER ASSY-FRT AXLE MTG CROSS* 4WD				1	02'1201	06'0228	
	4162005500	2WD				1	02'1201	06'0228	
	[08] 4165005000	*BOLT*				4	02'1201	06'0228	
	[09] 923161400D	*NUT*				2	02'1201	06'0228	M14X1.5
	[10] 934141200D	*WASHER*				4	02'1201	06'0228	M12
	[11] 9906012003	*NUT*				4	02'1201	06'0228	M12X1.25X6T
	[12] 9906014000	*NUT*				1	02'1201	06'0228	M14X1.5X6T

4410 FRONT SUSPENSION

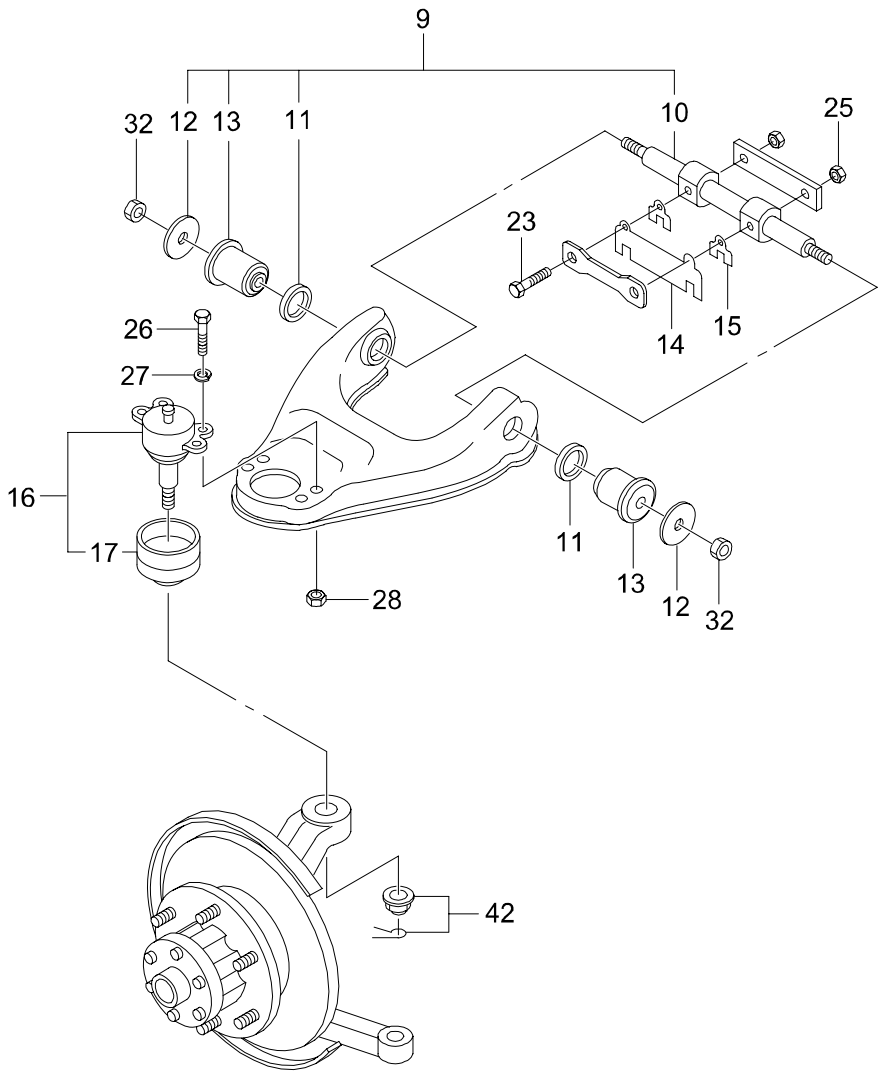

4410 FRONT SUSPENSION

ITC	KEY NO. PART NO	PART NAME OPTION	L/R	T/M	DRV	MODEL 662LA	EFF. DATE FROM	EFF. DATE TO	REMARK
	[09]	*ARM ASSY-FRT SUSPENSION UPR*							
	4440105001		LH			1	02'1201	06'0228	
	4440205001		RH			1	02'1201	06'0228	
	[10]	*PIN-FULCRUM*							
	4445105000					2	02'1201	06'0228	
	[11]	*WASHER*							
	4445205000					4	02'1201	06'0228	
	[12]	*WASHER*							
	4445305000					4	02'1201	06'0228	
	[13]	*BUSHING ASSY-FRT UPR ARM*							
	4449005000					4	02'1201	06'0228	
	[14]	*SHIM*							
	4447105161					1	02'1201	05'0512	T=1.6
Y	4447105162					1	05'0513	06'0228	T=1.6
	4447205321					1	02'1201	05'0512	T=3.2
Y	4447205322					1	05'0513	06'0228	T=3.2
	[15]	*SHIM-CASTER*							
	4445503003					1	02'1201	06'0228	T=0.4
	4447305080					1	02'1201	04'0127	T=0.8
Y	4447305081					1	04'0128	06'0228	
	4445203004					1	02'1201	06'0228	T=1.6
	[16]	*END ASSY-FRT SUSPENSION UPR*							
	4443003011					2	02'1201	06'0228	
	[17]	*BOOT-UPR*							
	4443203010					2	02'1201	06'0228	
	[23]	*BOLT*							
	9163012651					4	02'1201	06'0228	M12X1.25
	[25]	*NUT*							
	9906012001					4	02'1201	06'0228	M12X1.25
	[26]	*BOLT*							
	913040825B					8	02'1201	06'0228	M8X1.25X25

4410 FRONT SUSPENSION

ITC	KEY NO. PART NO	PART NAME OPTION	L/R	T/M	DRV	MODEL 662LA									EFF. DATE FROM	EFF. DATE TO	REMARK
	[27] 933100800D	*WASHER*				8									02'1201	06'0228	M8
	[28] 920640800D	*NUT*				8									02'1201	06'0228	M8X1.25
	[32] 9906010003	*NUT*				8									02'1201	06'0228	M10X1.25
	[42] 44599050A0	*NUT*				2									02'1201	06'0228	WITH PIN

4411 FRONT SHOCK ABSORBER

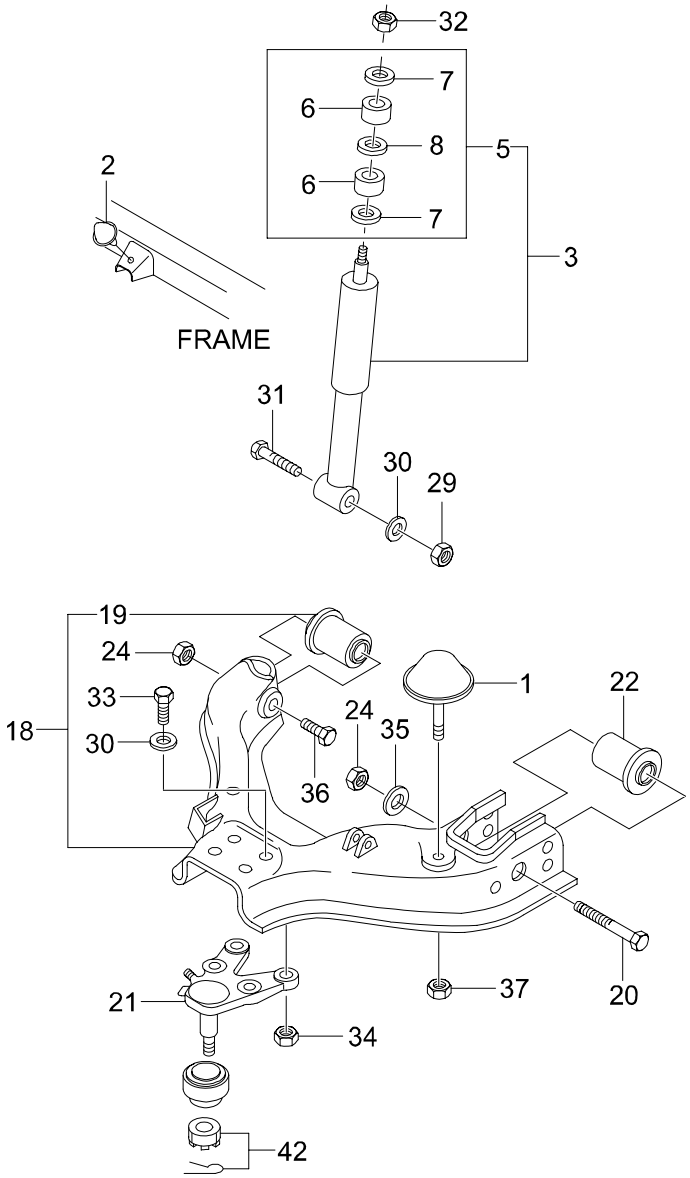

4411 FRONT SHOCK ABSORBER

ITC	KEY NO. PART NO	PART NAME OPTION	L/R	T/M	DRV	MODEL 662LA	EFF. DATE FROM	EFF. DATE TO	REMARK
	[01] 4421005010	*BUMPER ASSY-FRT SUSPENSION*				2	02'1201	06'0228	
	[02] 4448103000	*BUMPER-REBOUND FRT*				2	02'1201	06'0228	
	[03] 4430107201	*SHOCK ABSORBER ASSY-FRT* GAS ABSORBER				2	02'1201	06'0228	GREEN MARKED
	[05] 443KT05000	*BUSH*				1	02'1201	06'0228	
	[06] 4431105000	*BUSH*				4	02'1201	06'0228	
	[07] 4431205000	*WASHER*				2	02'1201	06'0228	
	[08] 4431305000	*WASHER*				2	02'1201	06'0228	
	[18]	*ARM ASSY-FRT SUSPENSION LWR*							
	4450105005		LH			1	02'1201	06'0228	
	4450205005		RH			1	02'1201	06'0228	
	[19] 4455005000	*BUSH*				2	02'1201	06'0228	
	[20] 4459205000	*PIN-FRT LWR ARM MTG RR*				2	02'1201	06'0228	
	[21] 4450505001	*END ASSY-FRT SUSPENSION LWR*				2	02'1201	06'0228	
	[22] 4063605001	*BUSH*				2	02'1201	06'0228	
	[24] 9906014000	*NUT*				4	02'1201	06'0228	M14X1.5X6T
	[29] 920361200D	*NUT*				4	02'1201	06'0228	M12X1.25

4411 FRONT SHOCK ABSORBER

ITC	KEY NO. PART NO	PART NAME OPTION	L/R	T/M	DRV	MODEL 662LA									EFF. DATE FROM	EFF. DATE TO	REMARK
	[30] 933101200D	*WASHER*				2									02'1201	06'0228	M12
	[31] 9576712551	*BOLT*				2									02'1201	06'0228	M12X1.25X55
	[32] 44599050A0	*NUT*				1									02'1201	06'0228	WITH PIN
	[33] 912471245D	*BOLT*				8									02'1201	06'0228	M12X1.25X45
	[34] 920761200D	*NUT*				8									02'1201	06'0228	M12X1.25
	[35] 934141400D	*WASHER*				2									02'1201	06'0228	M14
	[36] H109814001	*BOLT*				1									02'1201	06'0228	M14X1.5X100
	[37] 9289410001	*NUT*				2									02'1201	06'0228	M10X1.25
	[42] 44599050A0	*NUT*				1									02'1201	06'0228	WITH PIN

4420 STABILIZER BAR

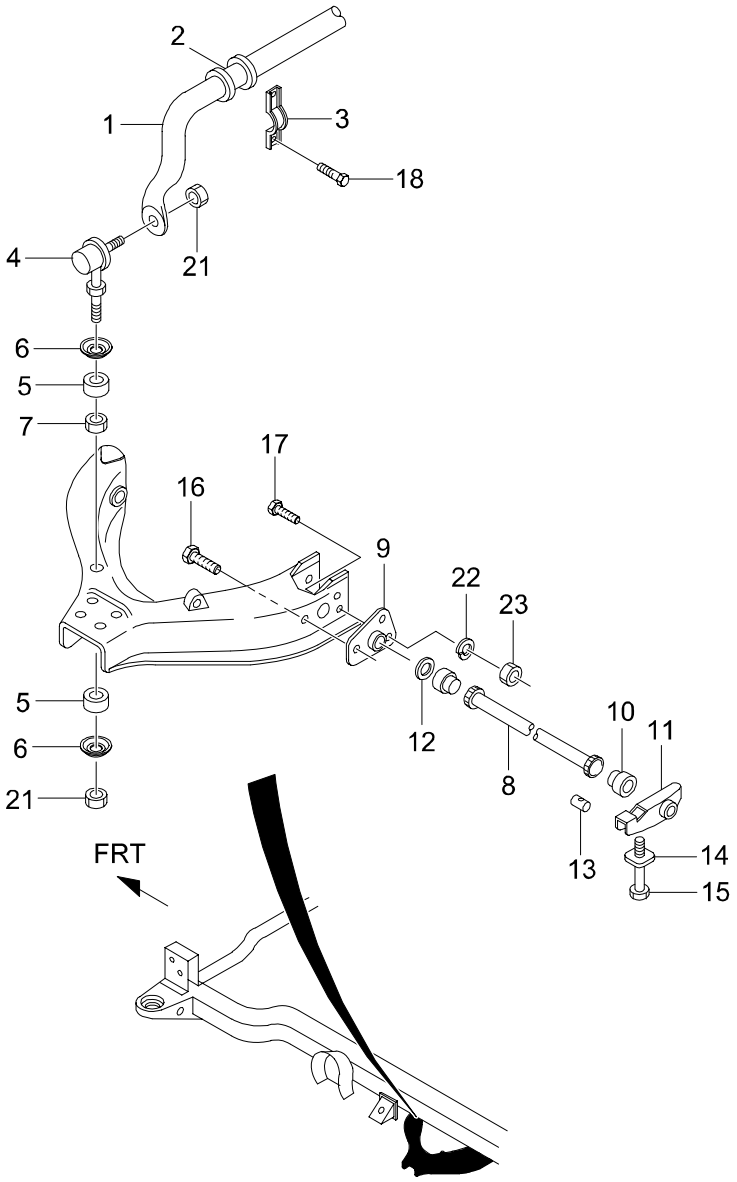

4420 STABILIZER BAR

ITC	KEY NO. PART NO	PART NAME OPTION	L/R	T/M	DRV	MODEL 662LA									EFF. DATE FROM	EFF. DATE TO	REMARK
	[01] 4471105001	*STABILIZER BAR ASSY-FRT*				1									02'1201	06'0228	
	[02] 6313230385	*BUSH*				2									02'1201	06'0228	
	[03] 6613233740	*CAP-STABILIZER BAR MTG*				2									02'1201	06'0228	
	[04] 4475005001	*LINK ASSY-STABILIZER*				2									02'1201	06'0228	
	[05] 4473005100	*BUSH*				4									02'1201	06'0228	
	[06] 4431205000	*WASHER*				4									02'1201	06'0228	
	[07] 4431305000	*WASHER*				2									02'1201	06'0228	
	[08]	*TORSION BAR ASSY*															
	4481105010	2WD	LH			1									02'1201	06'0228	YELLOW 3LINE MARK
	4482105010	2WD	RH			1									02'1201	06'0228	WHITE 3LINE MARK
	4481105100	4WD	LH			1									02'1201	06'0228	YELLOW 1 LINE MARK
	4482105100	4WD	RH			1									02'1201	06'0228	WHITE 1 LINE MARK
	[09] 4483105002	*ARM-FRT SUSPENSION TORQUE*				2									02'1201	06'0228	
	[10] 4486105000	*COVER-DUST TORSION BAR*				4									02'1201	06'0228	
	[11] 4485005002	*ARM ASSY-HEIGHT CONTROL*				2									02'1201	06'0228	
	[12] 4465203000	*SEAT-TORSION BAR END*				2									02'1201	06'0228	
	[13] 4465403001	*END PIECE-TORSION BAR*				2									02'1201	06'0228	

4420 STABILIZER BAR

ITC	KEY NO. PART NO	PART NAME OPTION	L/R	T/M	DRV	MODEL 662LA									EFF. DATE FROM	EFF. DATE TO	REMARK
	[14] 4465503000	*SEAT-TORSION BAR HIGH CONTROL*				2									02'1201	06'0228	
	[15] 4465603001	*BOLT*				2									02'1201	06'0228	
	[16] 4489105000	*BOLT*				2									02'1201	06'0228	12X1.25X40
	[17] 4489205001	*BOLT*				4									02'1201	06'0228	M10X1.25X40
	[18] 958371030D	*BOLT*				4									02'1201	06'0228	M10X1.25X30
	[21] 9906010001	*NUT*				4									02'1201	06'0228	M10X1.25
	[22] 933101000D	*WASHER*				4									02'1201	06'0228	
	[23] 9289410001	*NUT*				4									02'1201	06'0228	M10X1.25

4510 REAR SUSPENSION

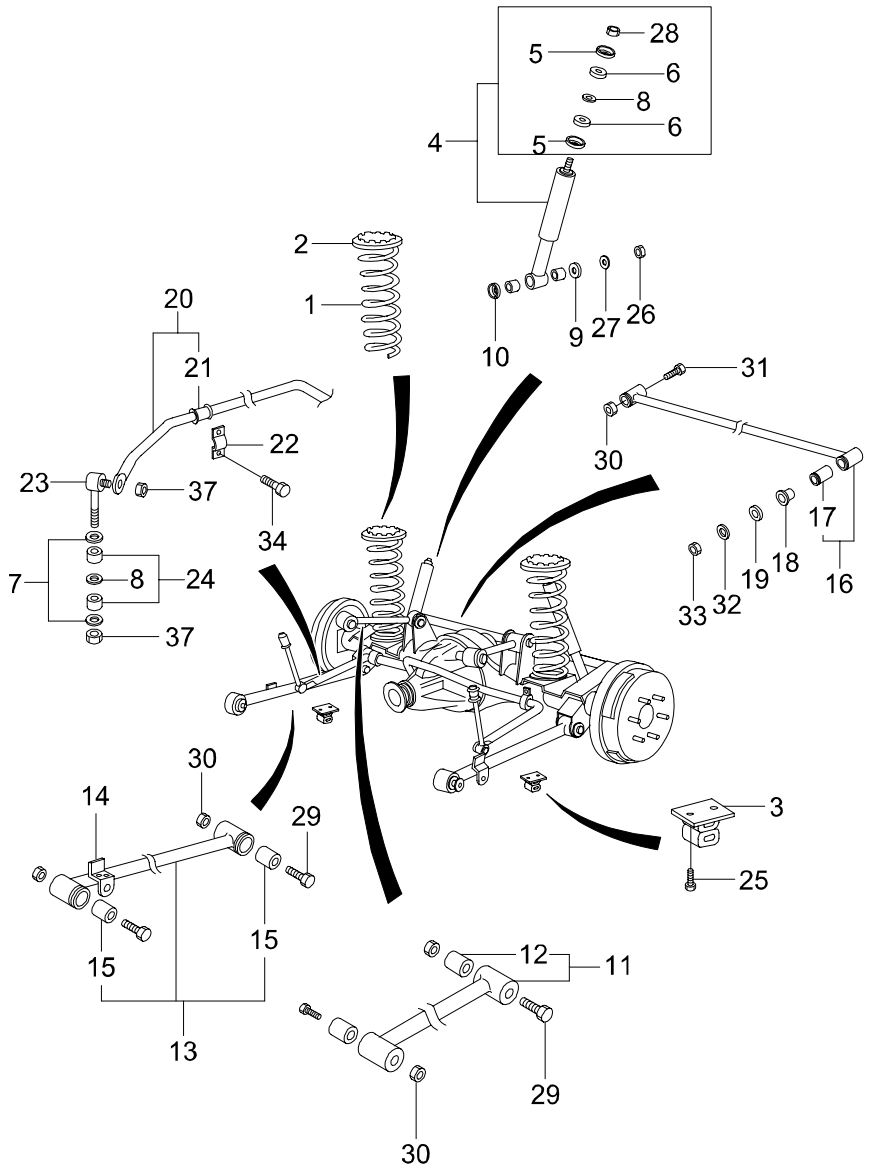

4510 REAR SUSPENSION

ITC	KEY NO. PART NO	PART NAME OPTION	L/R	T/M	DRV	MODEL 662LA	EFF. DATE FROM	EFF. DATE TO	REMARK
	[01]	*SPRING-COIL RR*							
	4511007002	NORMAL				2	02'1201	06'0228	BLUE 1LINE MARKED(L=388.33MM), RATE:2.86KG/MM
	4511006000	ABS+SELF LEVELING				2	03'0303	06'0228	NON MARKED,L:384.5MM,RATE:2.29KG/MM
	[02]	*SEAT-RR SPRING UPR RUBBER*							
	4519105010					2	02'1201	06'0228	
	[03]	*BUMPER ASSY-RR SUSPENSION*							
	4521005000		LH			1	02'1201	06'0228	
	4522005000		RH			1	02'1201	06'0228	
	[04]	*SHOCK ABSORBER ASSY-RR*							
	4530107201	GAS ABSORBER				2	02'1201	06'0228	MARKED GREEN POINT(20mm)
	4530107500	ABS+SELF LEVELING				2	03'0813	06'0228	
	[05]	*WASHER*							
	4431205100					4	02'1201	06'0228	
	[06]	*BUSH*							
	4431105000					4	02'1201	06'0228	
	[07]	*WASHER*							
	4431205000					4	02'1201	06'0228	
	[08]	*WASHER*							
	4431305000					2	02'1201	06'0228	
	[09]	*WASHER*							
	4531203000					2	02'1201	06'0228	
	[10]	*WASHER*							
	4535105000					2	02'1201	06'0228	
	[11]	*ARM & BUSH ASSY-RR UPR*							
	4540107000					2	02'1201	06'0228	
	[12]	*BUSH*							
	4542105000					4	02'1201	06'0228	
	[13]	*ARM & BUSH ASSY-RR LWR*							
	4550107200	-ABS(W/O WIRE MTG BRKT)	LH			1	02'1201	06'0228	YELLOW MARK,NO AVAILABLE

4510 REAR SUSPENSION

ITC	KEY NO. / PART NO	PART NAME / OPTION	L/R	T/M	DRV	MODEL 662LA	EFF. DATE FROM	EFF. DATE TO	REMARK
	[13]	*ARM & BUSH ASSY-RR LWR*							
	4550107300	ABS(WITH WIRE MTG BRKT)	LH			1	02'1201	06'0228	YELLOW MARK
	4550207200	-ABS(W/O WIRE MTG BRKT)	RH			1	02'1201	06'0228	WHITE MARK,NO AVAILABLE
	4550207300	ABS(WITH WIRE MTG BRKT)	RH			1	02'1201	06'0228	WHITE MARK
	[14]	*BRKT ASSY-PARKING BRAKE CABLE MTG*							
	4551305101					2	02'1201	06'0228	
	[15]	*BUSH*							
	4555105000					4	02'1201	06'0228	
	[16]	*ROD ASSY-LATERAL*							
	4560105000					1	02'1201	06'0228	
	[17]	*BUSH*							
	4562105000					1	02'1201	06'0228	
	[18]	*BUSH*							
	4563105000					2	02'1201	06'0228	
	[19]	*WASHER*							
	4563205000					1	02'1201	06'0228	IN DIA:16.5,OUT DIA:46
	[20]	*STABILIZER BAR ASSY-RR*							
	4571006000					1	02'1201	06'0228	
	[21]	*BUSH*							
	4571206000					2	02'1201	06'0228	
	[22]	*CAP-STABILIZER BAR MTG*							
	4472505000					2	02'1201	06'0228	
	[23]	*LINK ASSY-STABILIZER*							
	4475005001					2	02'1201	06'0228	
	[24]	*BUSH*							
	4473005000					4	02'1201	06'0228	
	[25]	*BOLT*							
	958371025D					4	02'1201	06'0228	M10X1.25X25
	[26]	*NUT*							
	920761200B					2	02'1201	06'0228	M12X1.25

4510 REAR SUSPENSION

ITC	KEY NO. PART NO	PART NAME OPTION	L/R	T/M	DRV	MODEL 662LA									EFF. DATE FROM	EFF. DATE TO	REMARK
	[27] 933101200D	*WASHER*				2									02'1201	06'0228	M12
	[28] 9906010001	*NUT*				2									02'1201	06'0228	M10X1.25
	[29] 9109814951	*BOLT*				4									02'1201	06'0228	M14X1.5X95
	[30] 9906014000	*NUT*				4									02'1201	06'0228	M14X1.5X6T
	[31] 9109814801	*BOLT*				1									02'1201	06'0228	M14X4.5X80
	[32] 933101600D	*WASHER*				1									02'1201	06'0228	SPRING WASHER M16
	[33] 920761600D	*NUT*				1									02'1201	06'0228	M16X1.5
	[34] 958371030D	*BOLT*				4									02'1201	06'0228	M10X1.25X30
	[37] 9906010001	*NUT*				2									02'1201	06'0228	M10X1.25

4611 STEERING WHEEL

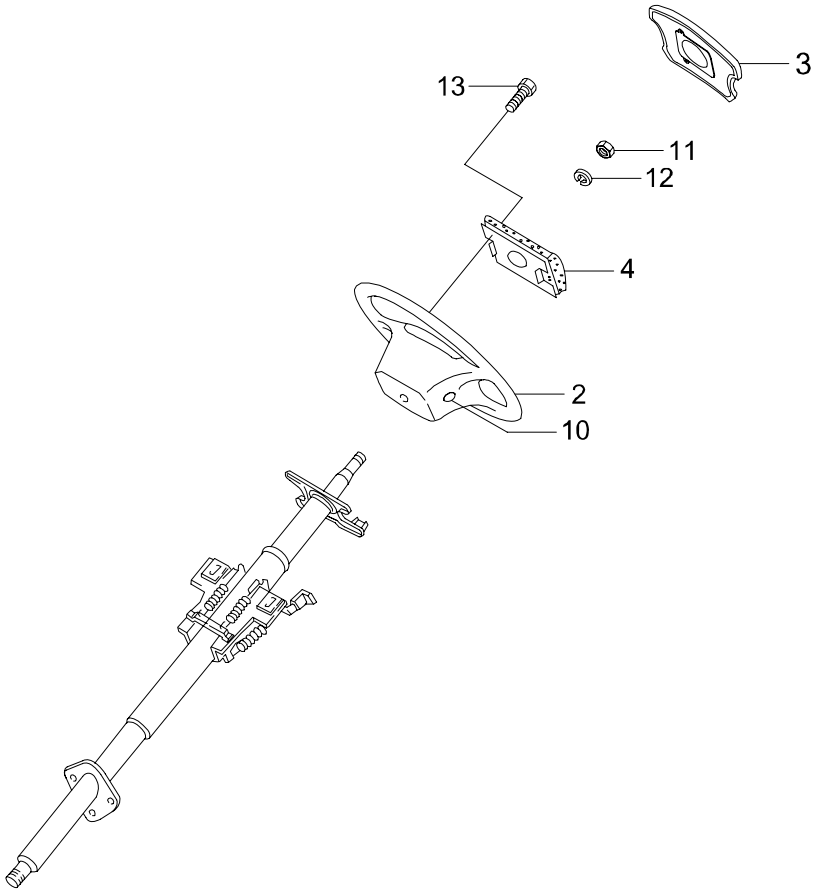

4611 STEERING WHEEL

ITC	KEY NO. PART NO	PART NAME OPTION	L/R	T/M	DRV	MODEL 662LA									EFF. DATE FROM	EFF. DATE TO	REMARK
	[02]	*WHEEL ASSY-STRG SUB*															
	4610106520XLAB	-A/BAG				1									02'1201	03'1111	PVC,99M/Y~,4 SPOKE TYPE
Y	4610106521LAB	PVC				1									03'1112	05'1231	-A/BAG
	4610106510XLAB	PVC,A/BAG				1									02'1201	06'0228	4 SPOKE TYPE
	4610106560XLAB	LEATHER				1									02'1201	06'0228	4 SPOKE TYPE
	[03]	*COVER ASSY-HORN UPR*															
	4610206520XLAB					1									02'1201	02'1115	4 SPOKE TYPE
O	4610206531LAB	SYMC LOGO				1									02'1116	06'0228	4 SPOKE TYPE
	[04]	*DAMPER-STEERING WHEEL*															
	4619005220					1									02'1201	06'0228	
	[10]	*PLUG-AIRBAG MODULATOR*															
	4614106500X		LH			1									02'1201	03'0425	
Y	4614106500		LH			1									03'0426	06'0228	
	4614206500X		RH			1									02'1201	03'0425	
Y	4614206500		RH			1									03'0426	06'0228	
	[11]	*NUT*															
	9203614001					1									02'1201	06'0228	M14X1.5
	[12]	*WASHER*															
	933101400D					1									02'1201	06'0228	M14
	[13]	*BOLT*															
	4610306500					2									02'1201	06'0228	M6X1.0

4613 STEERING COLUMN

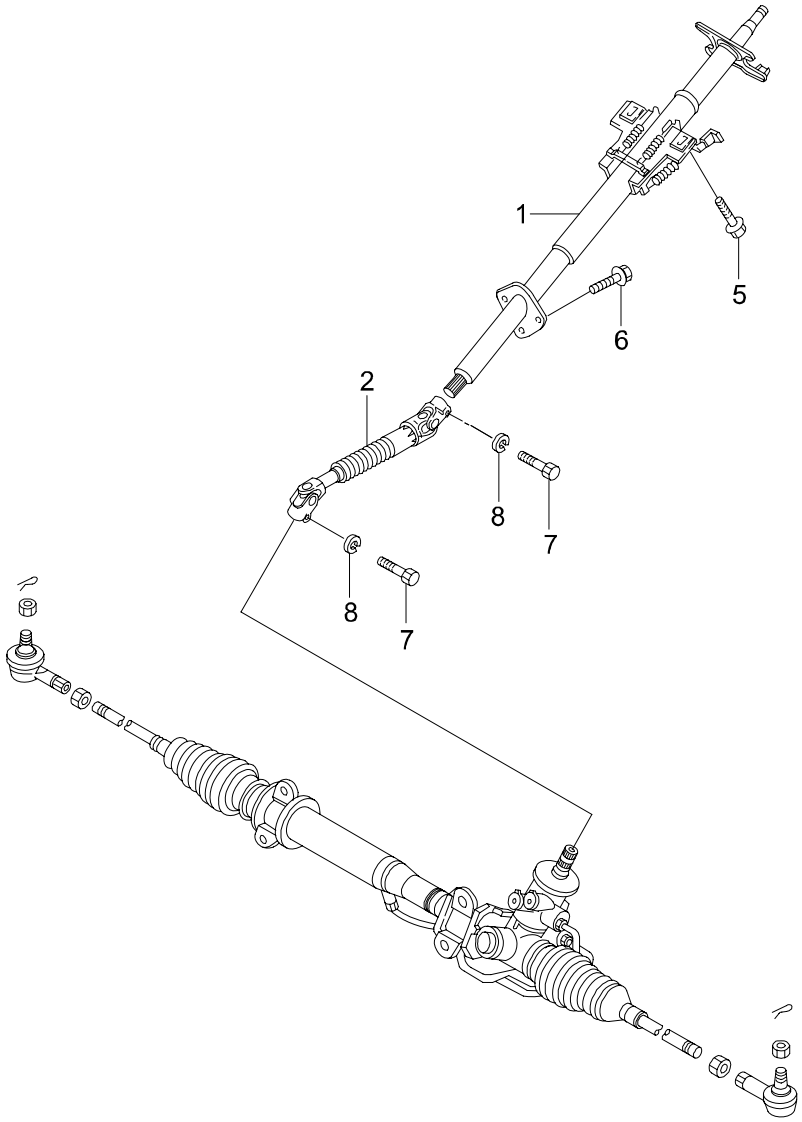

4613 STEERING COLUMN

ITC	KEY NO. PART NO	PART NAME OPTION	L/R	T/M	DRV	MODEL 662LA									EFF. DATE FROM	EFF. DATE TO	REMARK
	[01]	*COLUMN ASSY-STEERING*															
	4621005501	TILT			L	1									02'1201	06'0228	TILT
	4621005551	TILT			R	1									03'1007	06'0228	MANDO
	[02]	*SHAFT ASSY-STEERING LWR*															
	4631005401					1									02'1201	06'0228	
	[05]	*BOLT*															
	959170830D					2									02'1201	06'0228	M8X1.25X30
	[06]	*BOLT*															
	958140820D					3									02'1201	06'0228	M8X1.25X20
	[07]	*BOLT*															
	4631105000					2									02'1201	06'0228	M8X1.25X30 10T(SCREW:13MM)
	[08]	*WASHER*															
	933100800D					2									02'1201	06'0228	M8

4620 STEERING GEAR LINKAGE

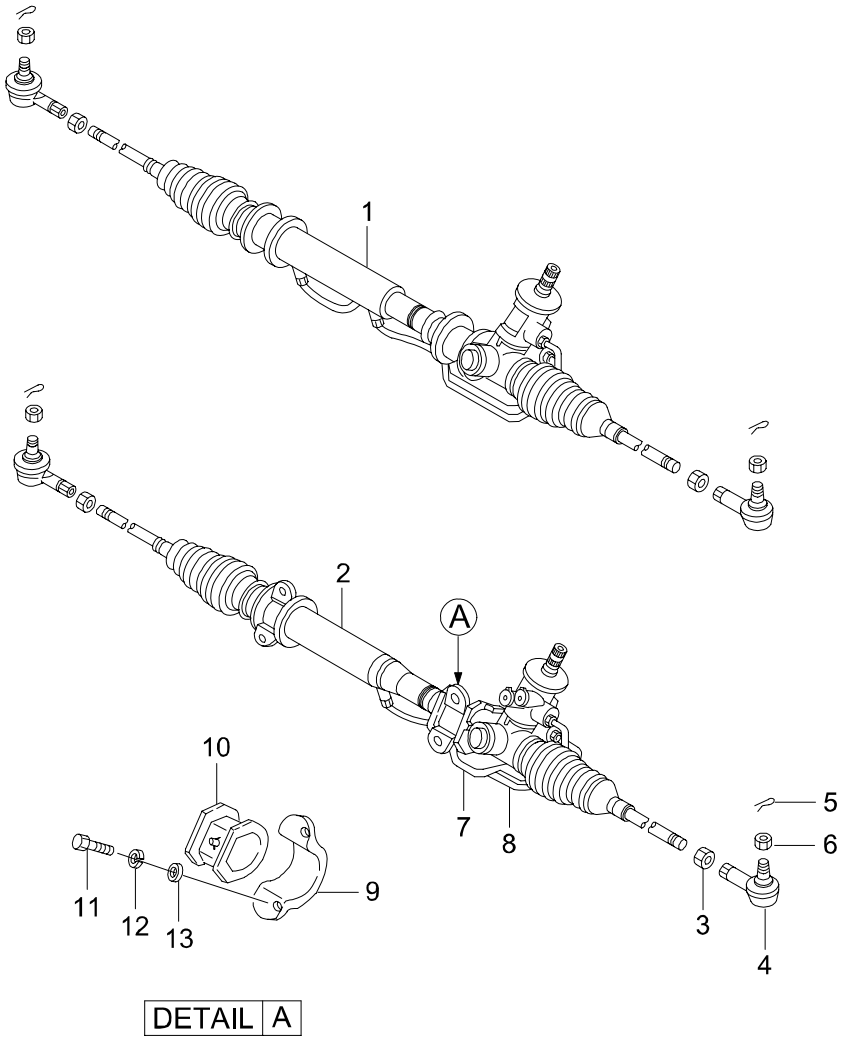

4620 STEERING GEAR LINKAGE

ITC	KEY NO. PART NO	PART NAME OPTION	L/R	T/M	DRV	MODEL 662LA									EFF. DATE FROM	EFF. DATE TO	REMARK
	[01]	*GEAR ASSY-STRG*															
	4651005751				L	1									02'1201	02'1215	MANDO,W/TIE ROD END
Y	4651005753				L	1									02'1216	03'0707	MANDO,W/TIE ROD END
Y	4651005754				L	1									03'0708	04'1117	MANDO,W/TIE ROD END
Y	4651005755				L	1									04'1118	06'0228	MANDO,W/TIE ROD END
	4651005853				R	1									02'1201	03'0820	MANDO,W/ TIE ROD
O	4651005854				R	1									03'0821	04'1124	MANDO,W/ TIE ROD
Y	4651005855				R	1									04'1125	06'0228	MANDO,W/ TIE ROD
	[02]	*GEAR ASSY-STRG*															
	4651005501					1									02'1201	02'1215	TRW(W/TIE ROD END)
Y	4651005503					1									02'1216	06'0228	TRW(W/TIE ROD END)
	4651005602				R	1									02'1201	03'1130	MANDO,W/ TIE ROD
	[03]	*NUT*															
	4651605000					2									02'1201	06'0228	M14X1.5
	[04]	*END ASSY-TIE ROD*															
	4666005502					2									02'1201	06'0228	
	[05]	*PIN-SPLIT*															
	953043025D					2									02'1201	06'0228	M3X25
	[06]	*NUT*															
	9228614001					2									02'1201	06'0228	M14X1.5
	[07]	*TUBE ASSY-STRG GEAR*															
	46598057A0					1									02'1201	06'0228	
	[08]	*TUBE ASSY-STRG GEAR*															
	46599057A0					1									02'1201	06'0228	
	[09]	*CLAMP-GEAR MTG*															
	4651005000					2									02'1201	06'0228	
	[10]	*RUBBER-GEAR HOUSING MTG*															
	4651105001		LH			1									02'1201	06'0228	
	[11]	*BOLT*															
	4651505001					4									02'1201	06'0228	M12X1.25

4620 STEERING GEAR LINKAGE

ITC	KEY NO. PART NO	PART NAME OPTION	L/R	T/M	DRV	MODEL 662LA									EFF. DATE FROM	EFF. DATE TO	REMARK
	[12] 933101200D	*WASHER*				4									02'1201	06'0228	M12
	[13] 934141200D	*WASHER*				4									02'1201	06'0228	M12

4640 POWER STEERING PIPE LINE

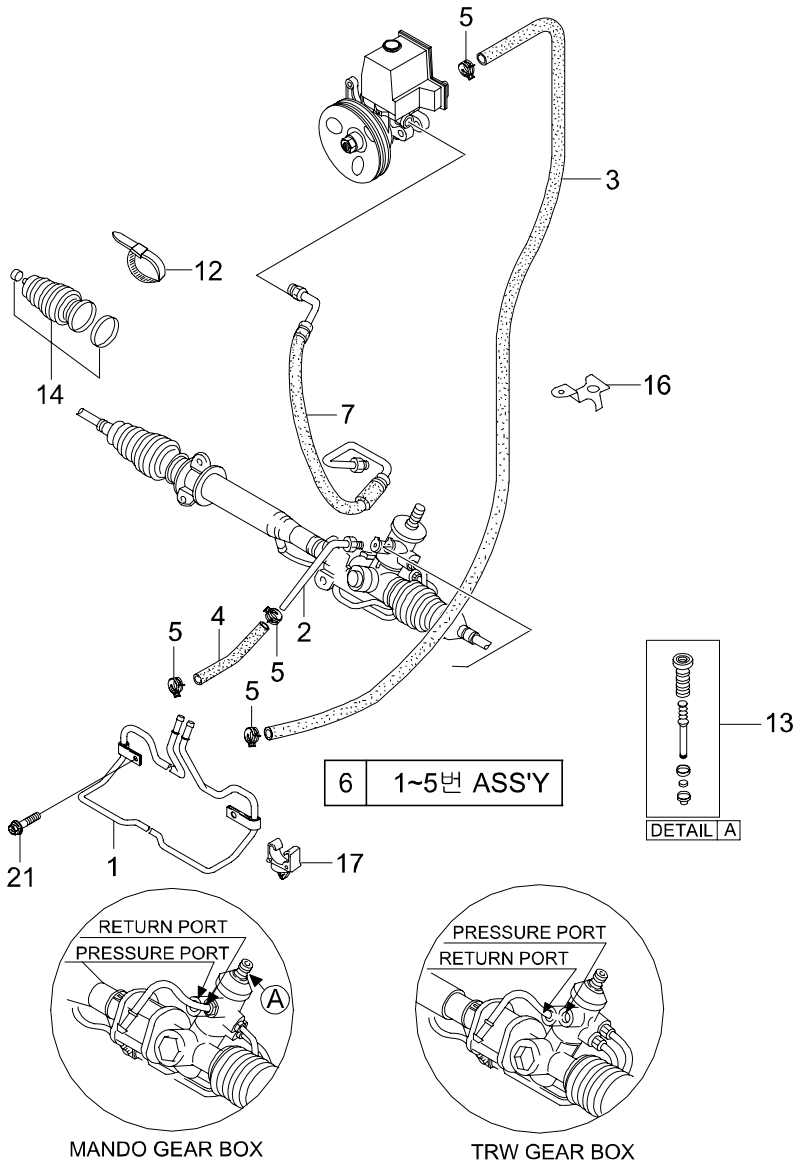

4640 POWER STEERING PIPE LINE

ITC	KEY NO. PART NO	PART NAME OPTION	L/R	T/M	DRV	MODEL 662LA									EFF. DATE FROM	EFF. DATE TO	REMARK
	[01] 4787005510	*TUBE ASSY-HOSE TO HOSE* MANDO,TRW COMMON			L	1									02'1201	06'0228	
	[02] 4785005200	*TUBE ASSY-GEAR TO HOSE* MANDO,TRW COMMON				1									02'1201	06'0228	
	[03] 4786105202X	*HOSE-RETURN*				1									02'1201	06'0228	
	[04] 4788005100	*HOSE* MANDO,TRW COMMON				1									02'1201	06'0228	
	[05] 4786905200	*CLAMP* MANDO,TRW COMMON				4									02'1201	06'0228	18mm
	[06] 4783005002	*TUBE ASSY-RETURN TO HOSE* MANDO,TRW COMMON				1									02'1201	06'0228	INCLUDE [1]~[5]
	[07] 4784005010	*HOSE ASSY-PUMP & GEAR* MANDO,TRW COMMON				1									02'1201	06'0228	
	[12] 8295205020	*BAND*				1									02'1201	06'0228	
	[13] 465KT05000	*RING KIT-P/STRG GEAR BOX* MANDO ONLY				1									02'1201	06'0228	
	[14] 466KT05000	*BOOT KIT-P/STRG GEAR BOX*				1									02'1201	06'0228	
	[16] 4787505001	*BRKT-RETURN TUBE MTG*				1									02'1201	06'0228	
	[17] 4787505101	*CLAMP*				1									02'1201	06'0228	
	[21] 982740616D	*SCREW*				2									02'1201	06'0228	M6X1.0X16

4711 POWER STEERING PUMP

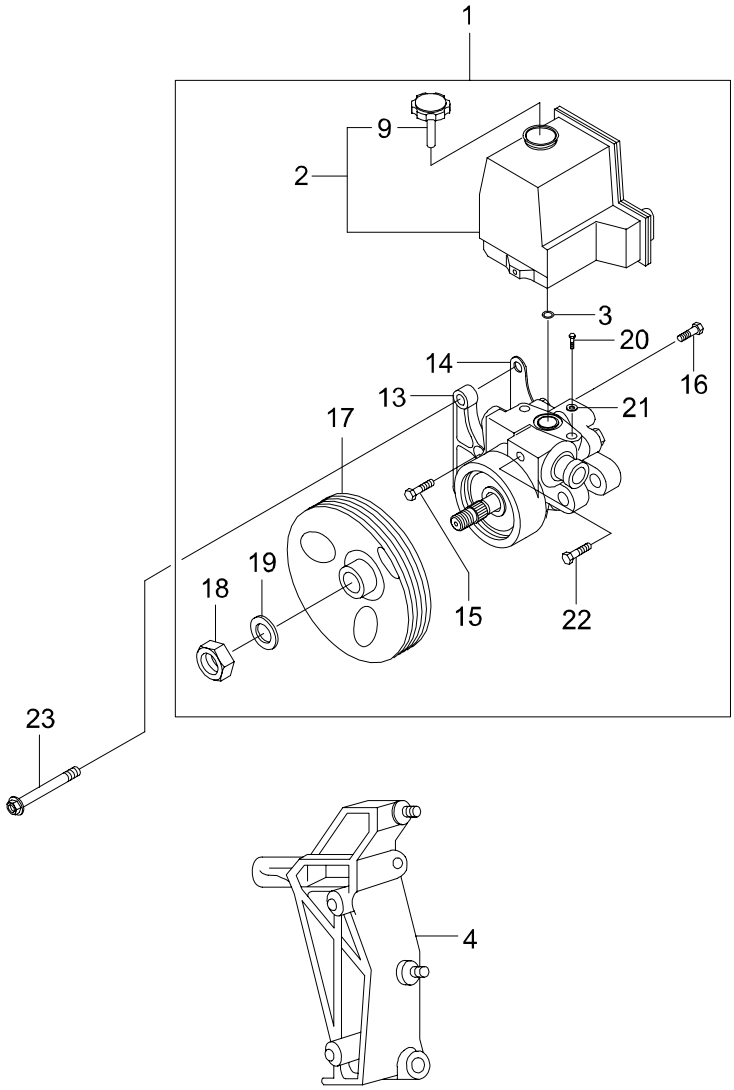

4711 POWER STEERING PUMP

ITC	KEY NO. PART NO	PART NAME OPTION	L/R	T/M	DRV	MODEL 662LA	EFF. DATE FROM	EFF. DATE TO	REMARK
	[01]	*PUMP ASSY-POWER STEERING*							
	6614603680					1	02'1101	03'0124	YOUNGSHIN
O	6614605080					1	03'0125	05'1009	YOUNGSHIN
O	6614605680					1	05'1010	06'0228	YOUNGSHIN
	6614604580					1	02'1101	06'0228	KOREA DELPHI
	[02]	*RESERVOIR ASSY-P/STRG*							
	6614663202					1	02'1101	06'0228	YOUNGSHIN
	6614663306					1	02'1101	06'0228	KOREA DELPHI
	[03]	*RING-O*							
	6619973048					1	02'1101	06'0228	
	[04]	*BRKT ASSY-POWER STEERING PUMP*							
	6612303740					1	02'1101	06'0228	
	[09]	*CAP ASSY-POWER STEERING PUMP*							
	6614663405					1	02'1101	03'0124	YOUNGSHIN
O	6614663605					1	03'0125	05'1009	YOUNGSHIN
O	6614663805					1	05'1010	06'0228	YOUNGSHIN
	6614663308					1	02'1101	06'0228	KOREA DELPHI
	[13]	*BRKT-POWER STEERING PUMP MTG-FRT*							
	6614663640					1	02'1101	06'0228	AL
	[14]	*BRKT-POWER STEERING PUMP MTG-RR*							
	6614663740					1	02'1101	06'0228	STEEL
	[15]	*BOLT*							
	6619973934					2	02'1101	06'0228	
	[16]	*BOLT*							
	6619974034					2	02'1101	06'0228	
	[17]	*PULLEY ASSY-POWER STEERING PUMP*							
	6614603179					1	02'1101	06'0228	YOUNGSHIN
	6614603279					1	02'1101	06'0228	KOREA DELPHI
	[18]	*NUT*							
	6619903061					1	02'1101	06'0228	
	[19]	*WASHER*							
	6619903840					1	02'1101	06'0228	

4711 POWER STEERING PUMP

ITC	KEY NO. PART NO	PART NAME OPTION	L/R	T/M	DRV	MODEL 662LA									EFF. DATE FROM	EFF. DATE TO	REMARK
	[20]	*BOLT*															
	6619974134					1									02'1101	06'0228	YOUNGSHIN
	6619974434					1									02'1101	06'0228	KOREA DELPHI
	[21]	*WASHER*															
	6619903940					1									02'1101	06'0228	
	[22]	*BOLT*															
	6619974234					2									02'1101	06'0228	
	[23]	*BOLT*															
	914126008012					2									02'1101	06'0228	M8X100
	914020008013					2									02'1101	06'0228	M8X50

4810 BRAKE PEDAL

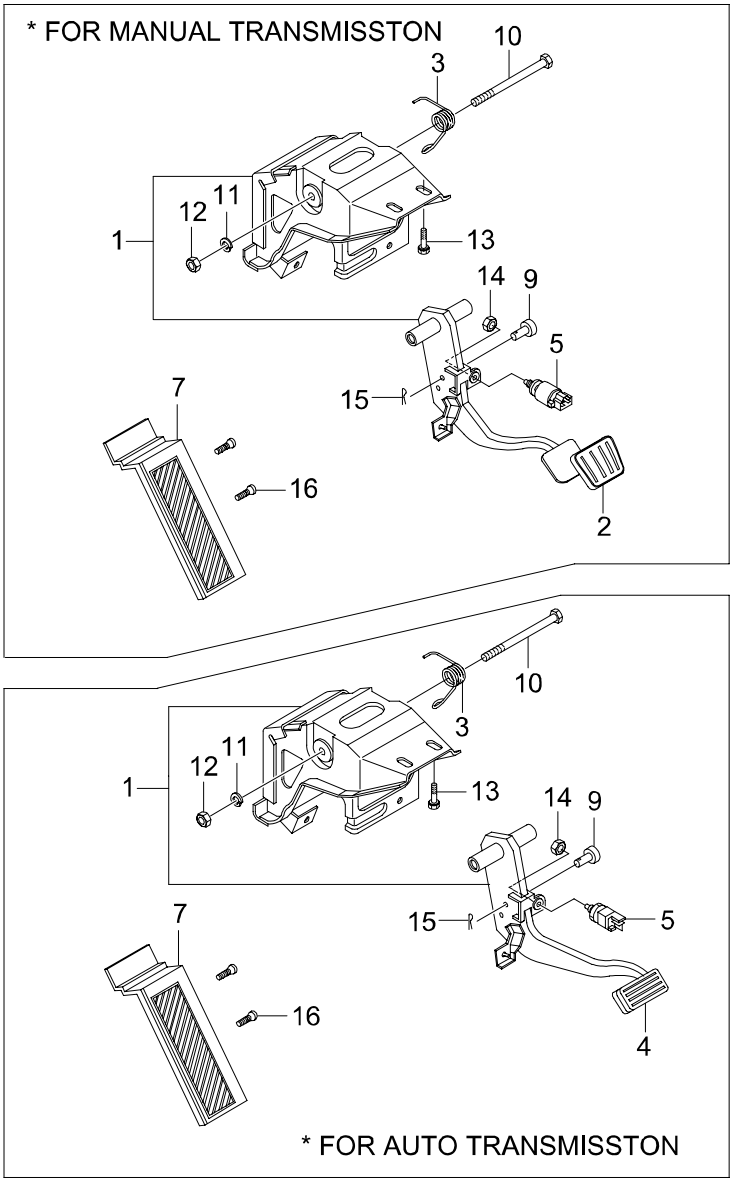

4810 BRAKE PEDAL

ITC	KEY NO. PART NO	PART NAME OPTION	L/R	T/M	DRV	MODEL 662LA	EFF. DATE FROM	EFF. DATE TO	REMARK
	[01]	*PEDAL ASSY-BRAKE*							
	4880005001					1	02'1201	06'0228	
	4880005121			A		1	02'1201	06'0228	
	4880005910			M	R	1	02'1201	06'0228	
	[02]	*PAD-CLUTCH PEDAL*							
	4886603000					1	02'1201	06'0228	
	[03]	*SPRING-BRAKE PEDAL RETURN*							
	4887105002					1	02'1201	06'0228	
	[04]	*PAD-BRAKE PEDAL*							
	4887305100					1	02'1201	06'0228	
	[05]	*SWITCH ASSY-STOP LAMP*							
	8571005110					1	02'1201	06'0228	2P
	[07]	*PAD-FOOT REST*							
	4889005001					1	03'0204	03'0810	MTG HOLE ON TOP
Y	4889005002				L	1	03'0811	06'0228	
	4889005901					1	02'1201	06'0228	
	[09]	*PIN-CLEVIS*							
	3046005000					1	02'1201	06'0228	
	[10]	*FULCRUM-PEDAL TO BRKT*							
	4887205000					1	02'1201	06'0228	
	[11]	*WASHER*							
	9331010001					1	02'1201	06'0228	
	[12]	*NUT*							
	9201410001					1	02'1201	06'0228	M10X1.25
	[13]	*BOLT*							
	958140820D					2	02'1201	06'0228	M8X1.25X20
	[14]	*NUT*							
	9286410001					1	02'1201	06'0228	M10X1.25
	[15]	*PIN-SNAP*							
	9531410001					1	02'1201	06'0228	

4810 BRAKE PEDAL

ITC	KEY NO. PART NO	PART NAME OPTION	L/R	T/M	DRV	MODEL 662LA									EFF. DATE FROM	EFF. DATE TO	REMARK
	[16] 980140612D	*SCREW*				2									02'1201	06'0228	M16X1.0X12

4820 BRAKE PIPE(NON ABS)

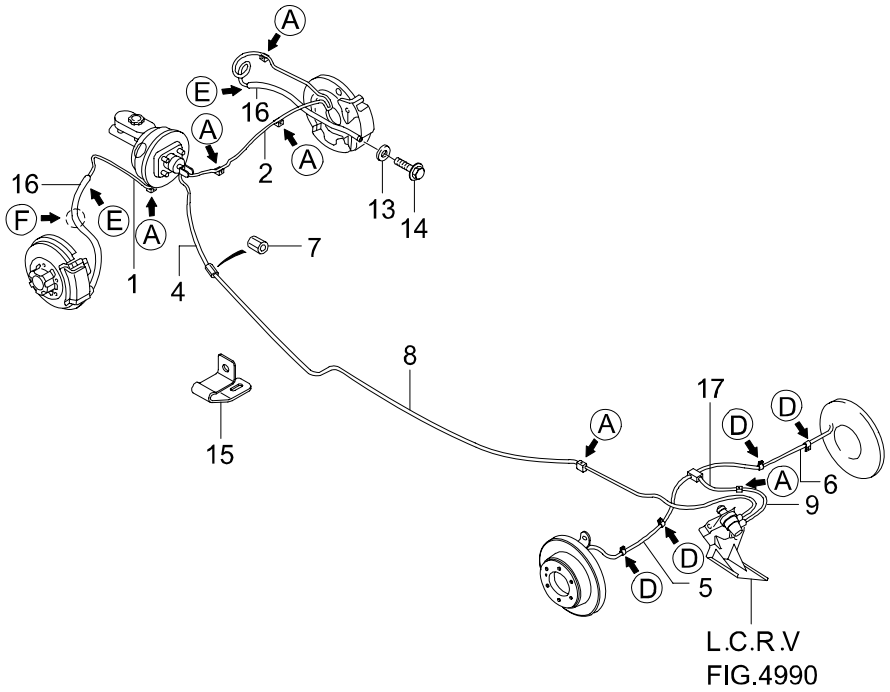

10	12	18	19
DETAIL,A	DETAIL,D	DETAIL,E	DETAIL,F

4820 BRAKE PIPE(NON ABS)

ITC	KEY NO. PART NO	PART NAME OPTION	L/R	T/M	DRV	MODEL 662LA	EFF. DATE FROM	EFF. DATE TO	REMARK
	[01] 4861005032	*TUBE ASSY-M/CYL PRI TO FRT*	LH			1	02'1201	06'0228	
	[02] 4862005032	*TUBE ASSY-M/CYL PRI TO FRT*	RH			1	02'1201	06'0228	
	[04] 4863005030	*TUBE ASSY-M/CYL SEC TO 2WAY CONN*				1	02'1201	04'1003	
N	4863005040					1	04'1004	06'0228	
	[05] 4864005000	*TUBE ASSY-3WAY CONN TO BRAKE*	LH			1	02'1201	06'0228	
	[06] 4865005001	*TUBE ASSY-3WAY CONN TO BRAKE*	RH			1	02'1201	06'0228	
	[07] 4865503000	*CONNECTOR*				2	02'1201	06'0228	
	[08] 4866007003	*TUBE ASSY-2WAY CONN TO LCRV*				1	02'1201	03'0113	
O	4866007004					1	03'0114	03'0209	
Y	4866007005					1	03'0210	06'0228	
	[09] 4867005001	*TUBE ASSY-LCRV TO RR HOSE*				1	02'1201	06'0228	
	[10] 4869105000	*CLIP*				8	02'1201	06'0228	
	[12] 4869405000	*CLIP*				1	02'1201	06'0228	
	[13] 4871603000	*GASKET-FRT BRAKE HOSE CALIPER*				2	02'1201	06'0228	
	[14] 4818005000	*BOLT*				2	02'1201	06'0228	
	[15] 4869705000	*CLIP*				4	02'1201	06'0228	

4820 BRAKE PIPE(NON ABS)

ITC	KEY NO. PART NO	PART NAME OPTION	L/R	T/M	DRV	MODEL 662LA									EFF. DATE FROM	EFF. DATE TO	REMARK
	[17]	*HOSE ASSY-RR BRAKE*															
	4872005020					1									02'1201	06'0228	
	[18]	*CLIP*															
	4873503001					5									02'1201	06'0228	
	[19]	*HOLDER-BRAKE HOSE MTG*															
	4875105000		LH			1									02'1201	06'0228	
	4875205000		RH			1									02'1201	06'0228	

4821 BRAKE PIPE(ABS/ABD)

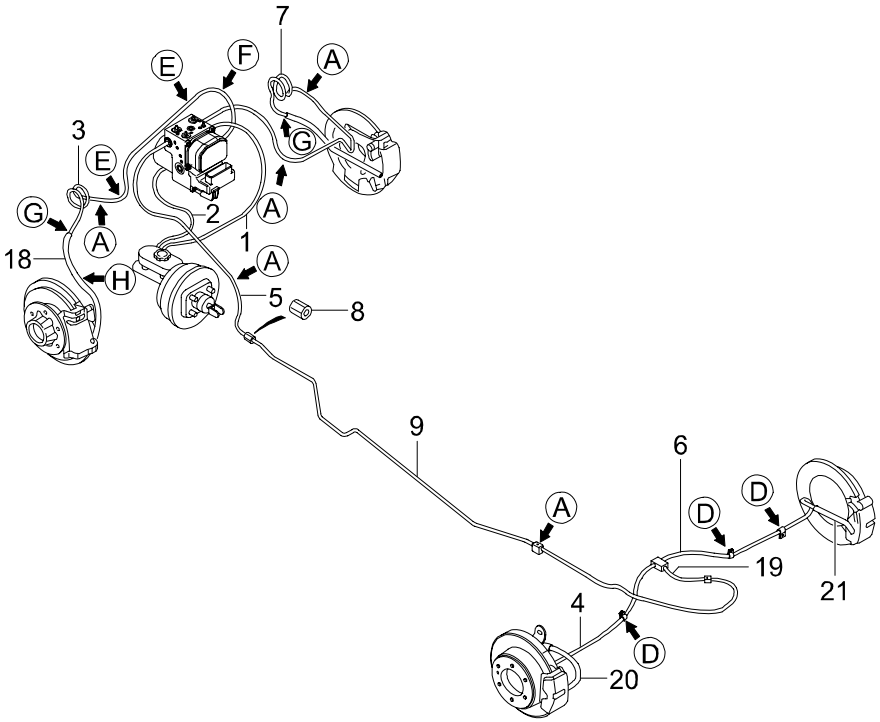

12 DETAIL,A	13 DETAIL,B	15 DETAIL,D	
16 DETAIL,E	17 DETAIL,F	22 DETAIL,G	23 DETAIL,H

4821 BRAKE PIPE(ABS/ABD)

ITC	KEY NO. PART NO	PART NAME OPTION	L/R	T/M	DRV	MODEL 662LA	EFF. DATE FROM	EFF. DATE TO	REMARK
	[01]	*TUBE ASSY-M/CYL PRI TO H/M*							
	4861005A02					1	02'1201	04'1003	
N	4861005A10					1	04'1004	06'0228	
	[02]	*TUBE ASSY-M/CYL SEC TO H/M*							
	4862005A01					1	02'1201	04'1003	
N	4862005A10					1	04'1004	06'0228	
	[03]	*TUBE ASSY-H/M TO FRT*							
	4863005A01		LH			1	02'1201	06'0228	
	[04]	*TUBE ASSY-3WAY CONN TO HOSE*							
	4864005100		LH			1	02'1201	06'0228	
	[05]	*TUBE ASSY-H/M TO 2WAY CONNECTOR*							
	4864005A01		LH			1	02'1201	06'0228	
	[06]	*TUBE ASSY-3WAY CONN TO HOSE*							
	4865005101	ABS,-ABD	RH			1	02'1201	06'0228	
	[07]	*TUBE ASSY-H/M TO FRT*							
	4865005A00		RH			1	02'1201	06'0228	
	[08]	*CONNECTOR*							
	4865503000					1	02'1201	06'0228	
	[09]	*TUBE ASSY-2WAY CONN TO RR HOSE*							
	4866007104					1	02'1201	03'0209	
Y	4866007105					1	03'0210	06'0228	
	[12]	*CLIP*							
	4869105000					11	02'1201	06'0228	
	[13]	*CLIP-ABD TUBE MTG*							
	4869805000		RH			3	02'1201	06'0228	
	[15]	*CLIP*							
	4869405000					1	02'1201	06'0228	
	[16]	*CLIP*							
	4869506300					1	02'1201	06'0228	

4821 BRAKE PIPE(ABS/ABD)

ITC	KEY NO. PART NO	PART NAME OPTION	L/R	T/M	DRV	MODEL 662LA									EFF. DATE FROM	EFF. DATE TO	REMARK
	[17] 4869705000	*CLIP*				5									02'1201	06'0228	
	[19] 4872005020	*HOSE ASSY-RR BRAKE*				1									02'1201	06'0228	
	[20] 4873005120	*HOSE ASSY-RR BRAKE*	LH			1									02'1201	06'0228	
	[21] 4874005120	*HOSE ASSY-RR BRAKE*	RH			1									02'1201	06'0228	
	[22] 4873503001	*CLIP*				8									02'1201	06'0228	
	[23]	*HOLDER-BRAKE HOSE MTG*															
	4875105000		LH			1									02'1201	06'0228	
	4875205000		RH			1									02'1201	06'0228	

4830 FRONT BRAKE

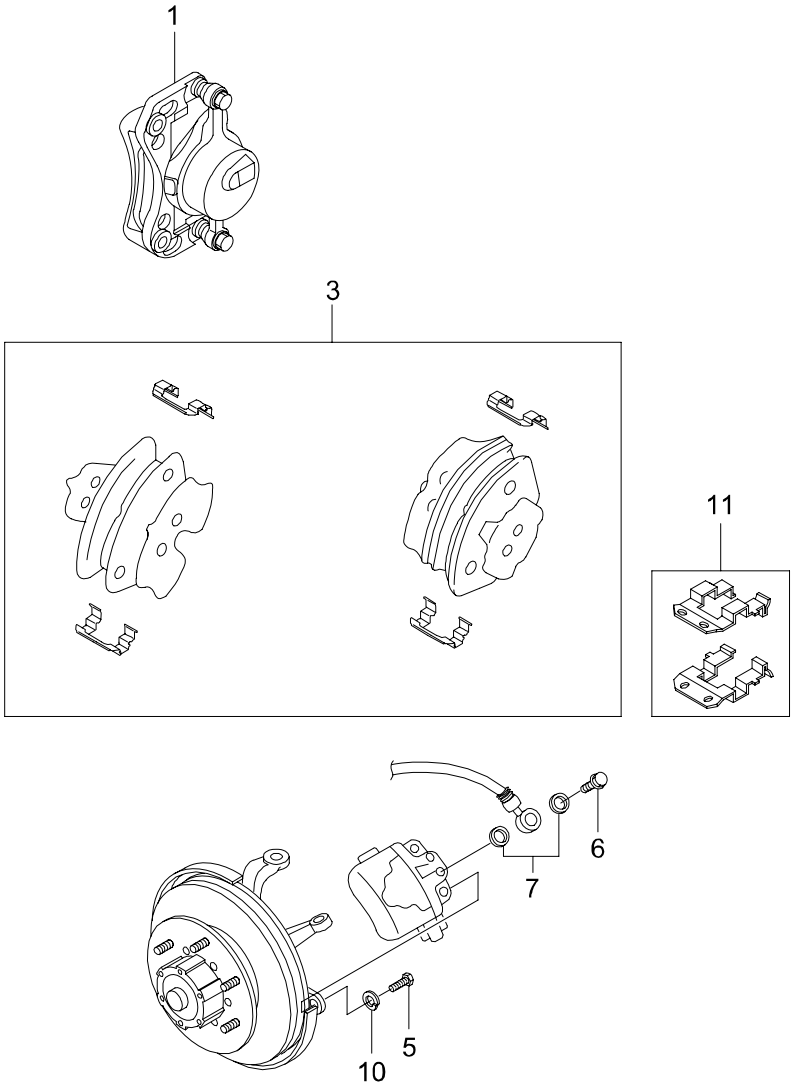

4830 FRONT BRAKE

ITC	KEY NO. PART NO	PART NAME OPTION	L/R	T/M	DRV	MODEL 662LA	EFF. DATE FROM	EFF. DATE TO	REMARK
	[01]	*CALIPER ASSY-FRT BRAKE*							
	4811005011		LH			1	02'1201	02'1216	WITH PAD
O	4811005012		LH			1	02'1217	04'0223	
Y	4811005013		LH			1	04'0224	06'0228	MANDO
	4814005011		RH			1	02'1201	02'1216	WITH PAD
O	4814005012		RH			1	02'1217	04'0223	
Y	4814005013		RH			1	04'0224	06'0228	MANDO
	[03]	*PAD SET-FRT BRAKE DISC*							
	4813005011					1	02'1201	04'0223	VENDOR:SANGSIN
O	4813005012					1	04'0224	06'0228	
	[05]	*BOLT*							
	4817005001					4	02'1201	06'0228	
	[06]	*BOLT*							
	4818005000					2	02'1201	06'0228	
	[07]	*GASKET-FRT BRAKE HOSE CALIPER*							
	4871603000					4	02'1201	06'0228	
	[10]	*WASHER*							
	933101200D					4	02'1201	06'0228	M12
	[11]	*CLIP SET-CALIPER*							
	0000000627					2	02'1201	06'0228	MANDO,SET=2EA, SRC NO=BC470-002-00

4841 REAR BRAKE(DISC)

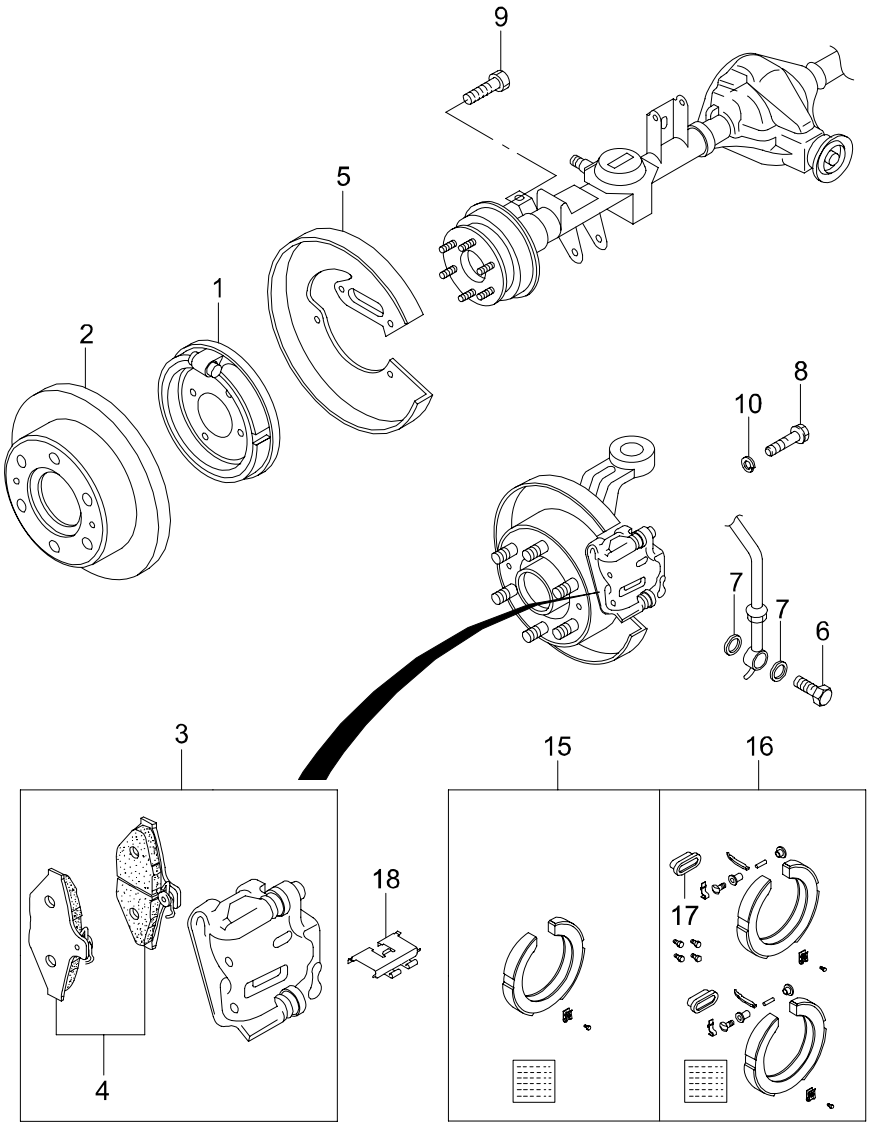

4841 REAR BRAKE(DISC)

ITC	KEY NO. PART NO	PART NAME OPTION	L/R	T/M	DRV	MODEL 662LA									EFF. DATE FROM	EFF. DATE TO	REMARK
	[01]	*BRAKE ASSY-RR DRUM*															
	4834005200	ABS,DISC	LH			1									02'1201	06'0228	
O	4834005201	ABS,DISC	LH			1									04'104	06'0228	
	4831005200	ABS,DISC	RH			1									02'1201	04'1003	
O	4831005201	ABS,DISC	RH			1									04'1004	07'0329	
	[02]	*DISC-RR BRAKE*															
	4840105101					2									02'1201	06'0228	
	[03]	*CALIPER ASSY-RR BRAKE*															
	4841008000	+ABS	LH			1									02'1201	04'0329	VENDOR:MANDO
Y	4841008001	+ABS	LH			1									04'0330	06'0228	
	4844008000	ABS	RH			1									02'1201	04'0329	VENDOR:MANDO
Y	4844008001	ABS	RH			1									04'0330	06'0228	
	[04]	*PAD SET-RR BRAKE DISC*															
	4841308050					1									02'1201	04'0330	VENDOR:SANGSIN
O	4841308051					1									04'0330	06'0228	
	[05]	*SHIELD-RR DISC BRAKE DUST*															
	4847105000		LH			1									02'1201	06'0228	
	4848105000		RH			1									02'1201	06'0228	
	[06]	*BOLT*															
	4818005000					2									02'1201	06'0228	
	[07]	*GASKET-FRT BRAKE HOSE CALIPER*															
	4871603000					4									02'1201	06'0228	
	[08]	*BOLT*															
	4849105000					4									02'1201	06'0228	
	[09]	*BOLT*															
	982740612D					8									02'1201	06'0228	M16X1.0X12
	[10]	*WASHER*															
	933101200D					4									02'1201	06'0228	M12
	[15]	*SHOE ASSY-P/BRAKE*															
	483KT05000					2									02'1201	06'0228	
	[16]	*REPAIR KIT-P/BRAKE*															
	483KT05010					1									02'1201	06'0228	2 PIECE

4841 REAR BRAKE(DISC)

ITC	KEY NO. PART NO	PART NAME OPTION	L/R	T/M	DRV	MODEL 662LA									EFF. DATE FROM	EFF. DATE TO	REMARK
	[17] 42099050A0	*GROMMET-RR AXLE SHAFT*				1									02'1201	06'0228	
	[18] 00000006AR	*CLIP RR SET-CALIPER*				2									02'1201	06'0228	MANDO, SET: UPR + LWR

4850 MASTER CYLINDER & BOOSTER(MANDO)

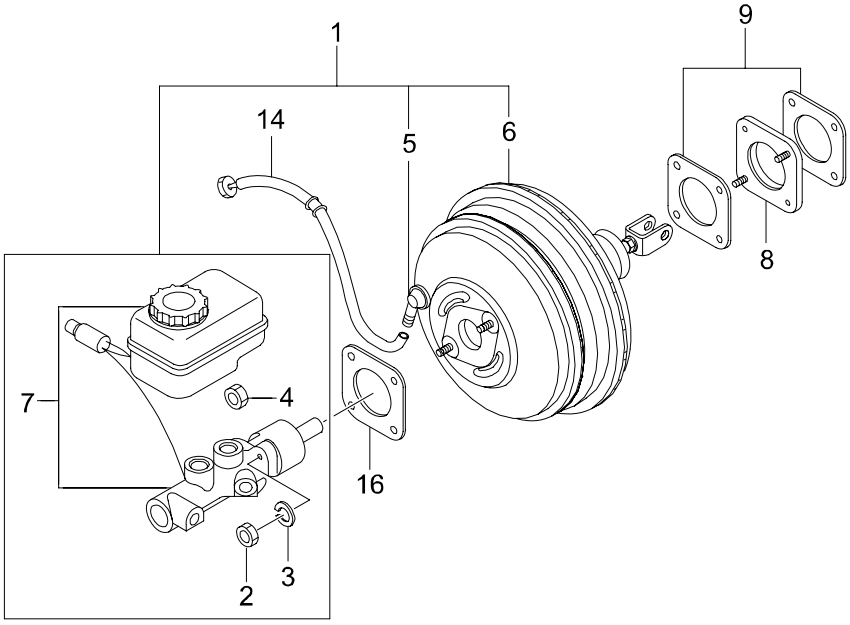

4850 MASTER CYLINDER & BOOSTER(MANDO)

ITC	KEY NO. PART NO	PART NAME OPTION	L/R	T/M	DRV	MODEL 662LA	EFF. DATE FROM	EFF. DATE TO	REMARK
	[01]	*BRAKE BOOSTER & MASTER CYLINDER ASSY*							
	4850005402	-ABS				1	02'1201	04'1003	
N	4850005600	-ABS				1	04'1004	06'0228	
	4850005501	ABS				1	02'1201	04'1003	
N	4850005700	ABS				1	04'1004	06'0228	
	[02]	*SEAL-OIL*							
	4850305000					1	02'1201	06'0228	
	[03]	*WASHER*							
	4850405000					2	02'1201	06'0228	
	[04]	*NUT*							
	4850505000					2	02'1201	06'0228	
	[05]	*VALVE-BOOSTER NONRETURN*							
	4858605000					1	02'1201	06'0228	
	[06]	*BOOSTER ASSY-POWER BRAKE*							
	4851005400					1	02'1201	04'1003	
N	4851005500					1	04'1004	06'0228	
	[07]	*CYLINDER ASSY-BRAKE MASTER*							
	4854005401	-ABS				1	02'1201	04'1003	
N	4854005600	-ABS				1	04'1004	06'0228	
O	4854005501	ABS				1	02'1201	04'1003	
N	4854005700	ABS				1	04'1004	06'0228	
	[08]	*SPACER ASSY-BOOSTER MTG*							
	4852005000					1	02'1201	06'0228	
N	4852005010					1	04'1004	06'0228	
	[09]	*SEAL-SPACER MTG*							
	4852505100					2	02'1201	06'0228	
	[14]	*HOSE ASSY-BOOSTER VACUUM*							
	4858005931					1	02'1201	02'0903	
N	4858005A10					1	02'0904	06'0228	
	[16]	*SEAL*							
	4858203400					2	02'1201	04'1003	
N	4858206C00					2	04'1004	06'0228	

4890 ABS SYSTEM

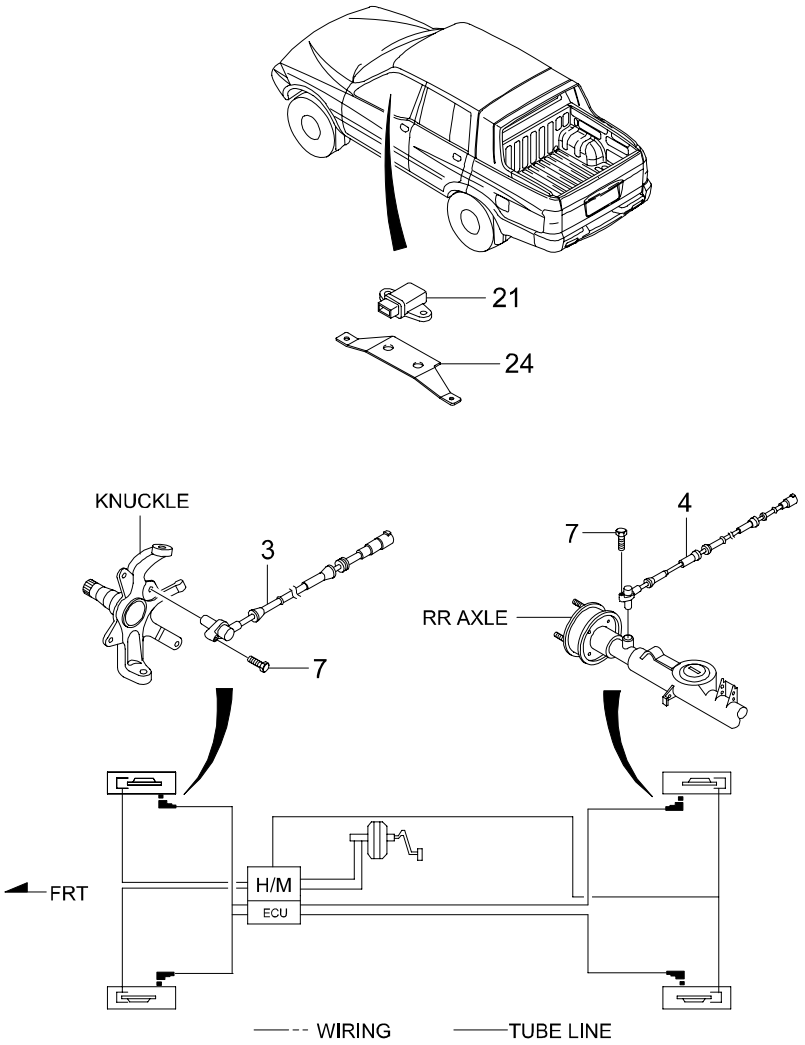

4890 ABS SYSTEM

ITC	KEY NO. PART NO	PART NAME OPTION	L/R	T/M	DRV	MODEL 662LA	EFF. DATE FROM	EFF. DATE TO	REMARK
	[03] 4892005000	*SENSOR ASSY-WHEEL SPEED FRT*				2	02'1201	06'0228	
	[04] 4893007000	*SENSOR ASSY-WHEEL SPEED RR*				2		03'1130	LENTH:1275mm
Y	4893007100	ABS5.3				2	03'1201	06'0228	LENTH:1275MM
	[07] 982640625D	*SCREW*				4	02'1201	06'0228	
	[21] 4895008000	*SENSOR ASSY-ACCEL*				1	02'1201	06'0228	
	[24] 8679005100	*BRKT-ACCEL SENSOR*				1	02'1201	06'0228	

4891 HYDRAULIC MODULATOR

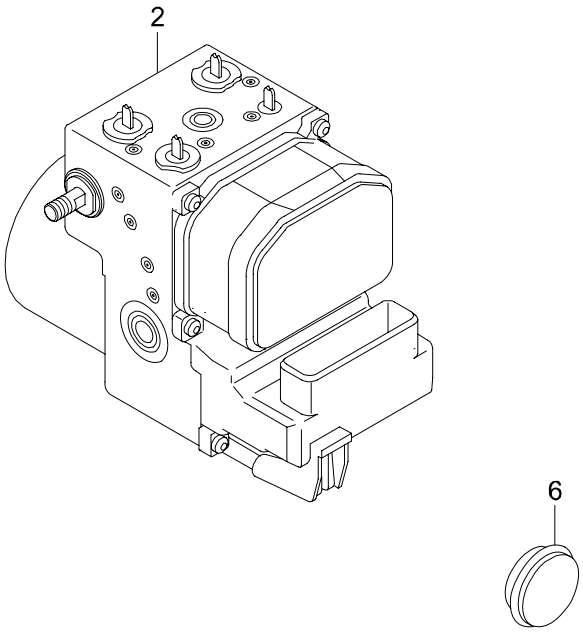

4891 HYDRAULIC MODULATOR

ITC	KEY NO. PART NO	PART NAME OPTION	L/R	T/M	DRV	MODEL 662LA									EFF. DATE FROM	EFF. DATE TO	REMARK
	[02]	*MODULE-ABS5.3*															
	4891008A00	ABS5.3				1									02'1201	06'0228	CHARGED WITH BRAKE OIL
	4894008A00	ABS/ABD5.3				1									02'1201	06'0228	CHARGED WITH BRAKE OIL
	[06]	*PLUG-BLIND*															
	9514020100					2									02'1201	06'0228	M20X1.0T

4910 PARKING BRAKE

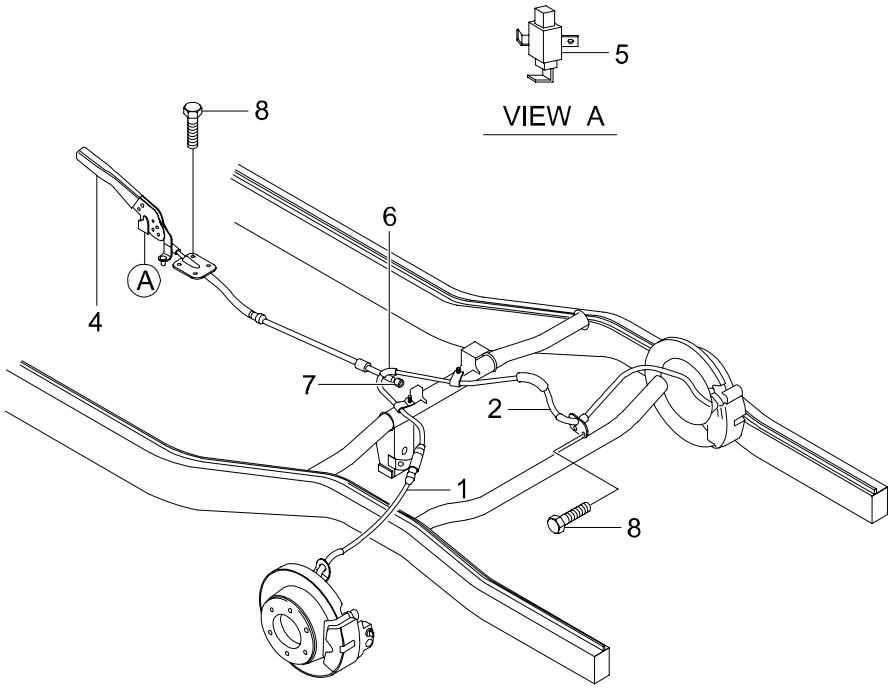

4910 PARKING BRAKE

ITC	KEY NO. PART NO	PART NAME OPTION	L/R	T/M	DRV	MODEL 662LA									EFF. DATE FROM	EFF. DATE TO	REMARK
	[01]	*CABLE ASSY-PARKING BRAKE RR*															
	4901007100	DISC(ABS)	LH			1									02'1201	06'0228	
	[02]	*CABLE ASSY-PARKING BRAKE RR*															
	4902007100	DISC(ABS)	RH			1									02'1201	06'0228	
	[04]	*LEVER ASSY-PARKING BRAKE*															
	4910005501LAD					1									02'1201	06'0228	
	[05]	*SWITCH ASSY-PARKING BRAKE*															
	8572005010					1									02'1201	06'0228	
	[06]	*EQUALIZER*															
	4922603011					1									02'1201	06'0228	
	[07]	*NUT*															
	4913305001X					4									02'1201	06'0228	
	[08]	*BOLT*															
	957170830D					8									02'1201	06'0228	M8X1.25X30
	958040820D					7									02'1201	06'0228	M8X1.25X20

4990 LOAD CONSCIOUS REDUCING VALVE

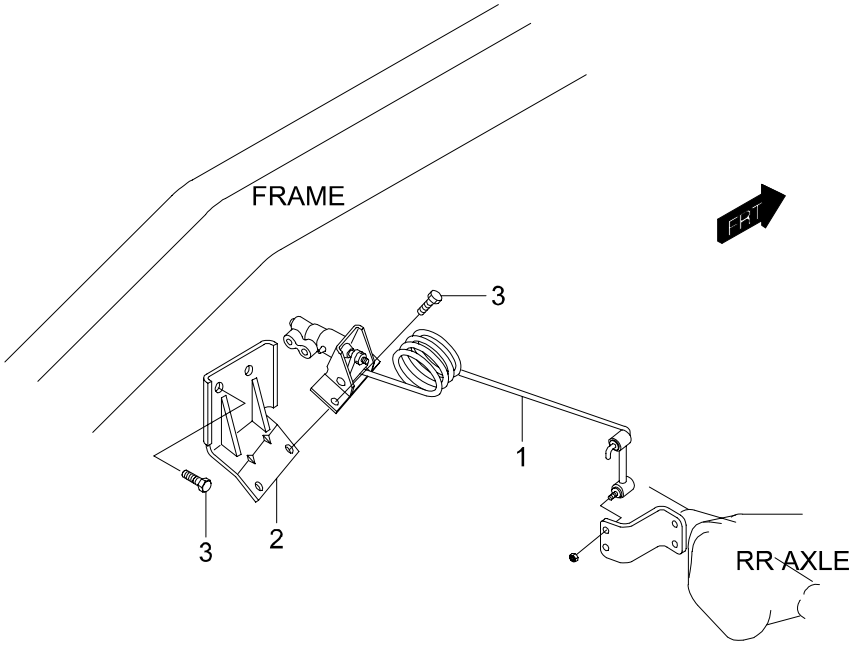

4990 LOAD CONSCIOUS REDUCING VALVE

ITC	KEY NO. PART NO	PART NAME OPTION	L/R	T/M	DRV	MODEL 662LA									EFF. DATE FROM	EFF. DATE TO	REMARK
	[01] 4922005001	*LCRV ASSY* -ABS				1									02'1201	06'0228	
	[02] 4923105001	*BRKT-LCRV MTG* -ABS				1									02'1201	06'0228	
	[03] 958170825D	*BOLT* -ABS				4									02'1201	06'0228	M8X1.25X25

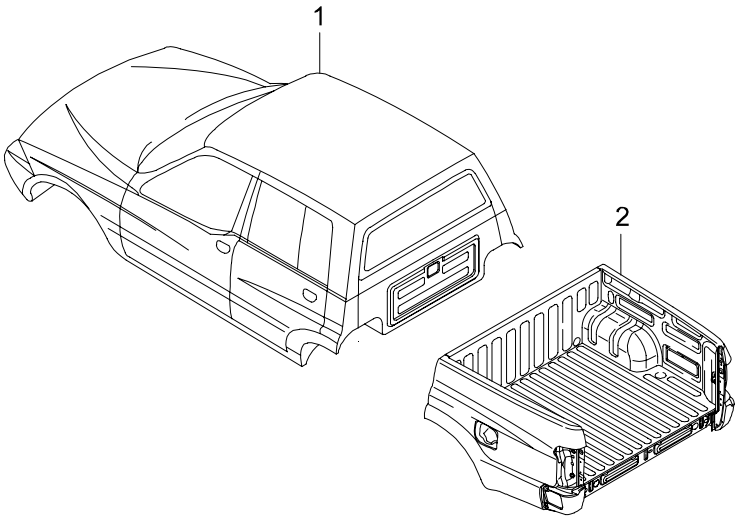
1
2

5110 WHITE BODY

ITC	KEY NO. PART NO	PART NAME OPTION	L/R	T/M	DRV	MODEL 662LA									EFF. DATE FROM	EFF. DATE TO	REMARK
	[01]	*WHITE BODY*															
	501LT07M00					1									02'1201	06'0228	WITH HOOD&DOOR
	[02]	*DECK COMPL*															
	5020007000					1									02'1201	03'0302	W/OUT T/GATE&FEUL P/DR
O	5020007003	2003M/Y				1									03'0303	06'0228	W/OUT T/GATE&FEUL P/DR

5120 BODY MOUNTING

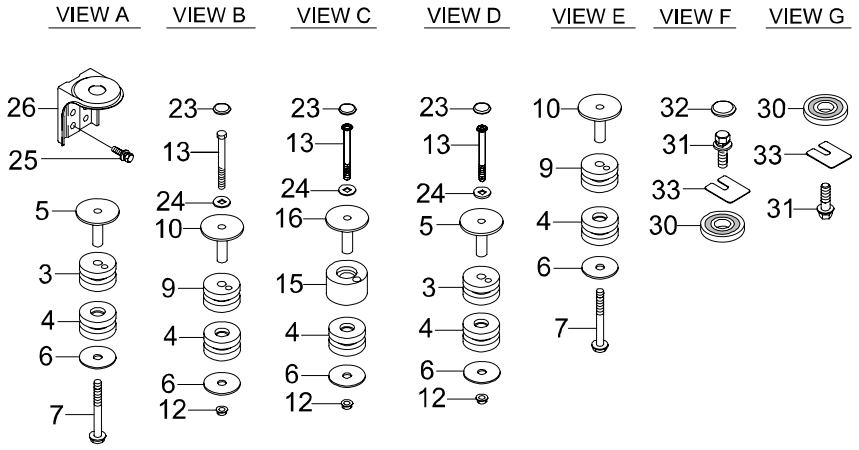

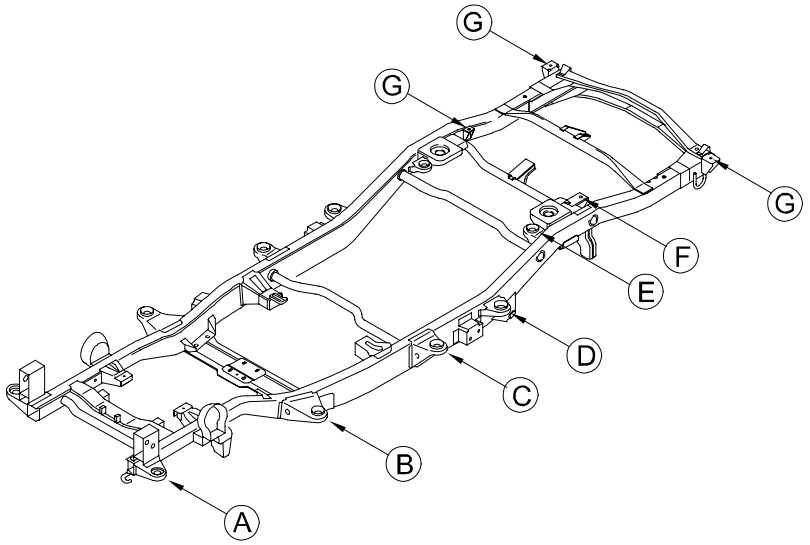

5120 BODY MOUNTING

ITC	KEY NO. PART NO	PART NAME OPTION	L/R	T/M	DRV	MODEL 662LA	EFF. DATE FROM	EFF. DATE TO	REMARK
	[03] 6011105000	*INSULATOR-BODY MTG NO1 UPR*				1	02'1201	06'0228	
	[04] 6011205000	*INSULATOR-BODY MTG NO1 LWR*				10	02'1201	06'0228	
	[05] 6011305000	*WASHER*				1	02'1201	06'0228	
	[06] 6011605000	*WASHER*				10	02'1201	06'0228	
	[07] H597710101	*BOLT*				4	02'1201	06'0228	M10X1.25X110
	[09] 6012405000	*INSULATOR ASSY-BODY MTG NO2 UPR*				1	02'1201	06'0228	
	[10] 6012305000	*WASHER*				1	02'1201	02'0401	
Y	6012305001					4	02'0402	06'0228	
	[12] 928961000D	*NUT*				6	02'1201	06'0228	M10X1.25
	[13] H164710201	*BOLT*				6	02'1201	06'0228	M10X1.25
	[15] 6013105000	*INSULATOR-BODY MTG NO3 UPR*				1	02'1201	06'0228	
	[16] 6013305001	*WASHER*				1	02'1201	06'0228	
	[23] 9514040120	*PLUG-BLIND*				6	02'1201	06'0228	M40X1.2T
	[24] 934241400D	*WASHER*				6	02'1201	06'0228	M14
	[25] 958170825D	*BOLT*				8	02'1201	06'0228	M8X1.25X25

5120 BODY MOUNTING

ITC	KEY NO. PART NO	PART NAME OPTION	L/R	T/M	DRV	MODEL 662LA									EFF. DATE FROM	EFF. DATE TO	REMARK
	[26] 5711705000	*BRKT-BODY MTG NO1 LWR*				2									02'1201	06'0228	
	[30] 6011107000	*INSULATOR-DECK MTG*				4									02'1201	06'0228	
	[31] 5658507000	*BOLT*				4									02'1201	06'0228	M10X1.25X45,BLUE BOND COATING
	[32] 9514030100	*PLUG-BLIND*				1									02'1201	06'0228	M30X1.0T
	[33] 6011307000	*SHIM-DECK MTG*				1									02'1201	06'0228	

5210 SIDE & REAR BODY

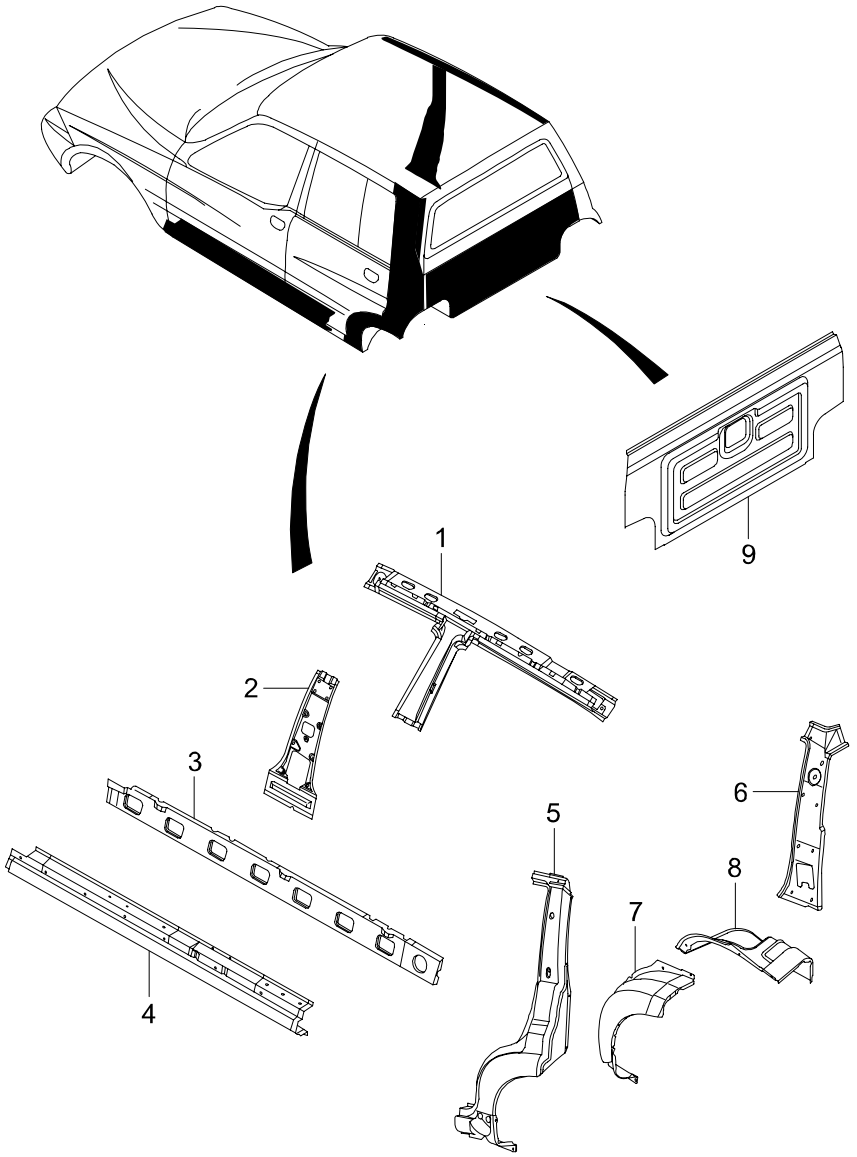

5210 - 01

5210 SIDE & REAR BODY

ITC	KEY NO. PART NO	PART NAME OPTION	L/R	T/M	DRV	MODEL 662LA									EFF. DATE FROM	EFF. DATE TO	REMARK
	[01]	*RAIL ASSY-ROOF SIDE*															
	5210705104		LH			1									02'1201	06'0228	
	5210805104		RH			1									02'1201	06'0228	
	[02]	*PNL ASSY-B PLR INR*															
	5243005101		LH			1									02'1201	06'0228	
	5244005101		RH			1									02'1201	06'0228	
	[03]	*REINF-SIDE SILL OTR*															
	5237605100		LH			1									02'1201	06'0228	
	5238605100		RH			1									02'1201	06'0228	
	[04]	*PNL ASSY-SIDE SILL OTR*															
	5237105000		LH			1									02'1201	06'0228	
	5238105000		RH			1									02'1201	06'0228	
	[05]	*PANEL ASSY-C PLR OTR*															
	5251007101		LH			1									02'1201	03'1225	
N	5251007102	GLASS ANT	LH			1									03'1226	06'0228	
O	5251007002	GLASS ANT	LH			1									03'1226	06'0228	2004M/Y
	5251007110	S/ROOF	LH			1									03'1226	06'0228	
	5252007101		RH			1									02'1201	06'0228	
	5252007110	S/ROOF	RH			1									03'1226	06'0228	
	[06]	*PNL ASSY-C PLR INR*															
	5261007100		LH			1									02'1201	03'0302	
O	5261007102	2003M/Y	LH			1									03'0303	03'1225	
O	5261007103					1									03'1226	06'0228	
	5262007100		RH			1									02'1201	03'0302	
O	5262007102	2003M/Y	RH			1									03'0303	03'1225	
O	5262007103		RH			1									03'1226	06'0228	
	[07]	*PNL-WHEEL HOUSE OTR*															
	5271007100		LH			1									02'1201	03'0302	
O	5271007101	2003M/Y	LH			1									03'0303	06'0228	2003M/Y
	5272007100		RH			1									02'1201	03'0302	
O	5272007101	2003M/Y	RH			1									03'0303	06'0228	
	[08]	*PNL ASSY-WHEEL HOUSE INR*															
	5273007100		LH			1									02'1201	03'0302	
O	5273007101	2003M/Y	LH			1									03'0303	06'0228	
	5274007100		RH			1									02'1201	03'0302	
O	5274007101	2003M/Y	RH			1									03'0303	06'0228	

5210 SIDE & REAR BODY

ITC	KEY NO. PART NO	PART NAME OPTION	L/R	T/M	DRV	MODEL 662LA									EFF. DATE FROM	EFF. DATE TO	REMARK
	[09]	*PNL ASSY-BACK*															
	5411007100					1									02'1201	06'0228	
	5411007200				R	1									04'0127	06'0228	AUSTRALIA

5230 A PILLAR

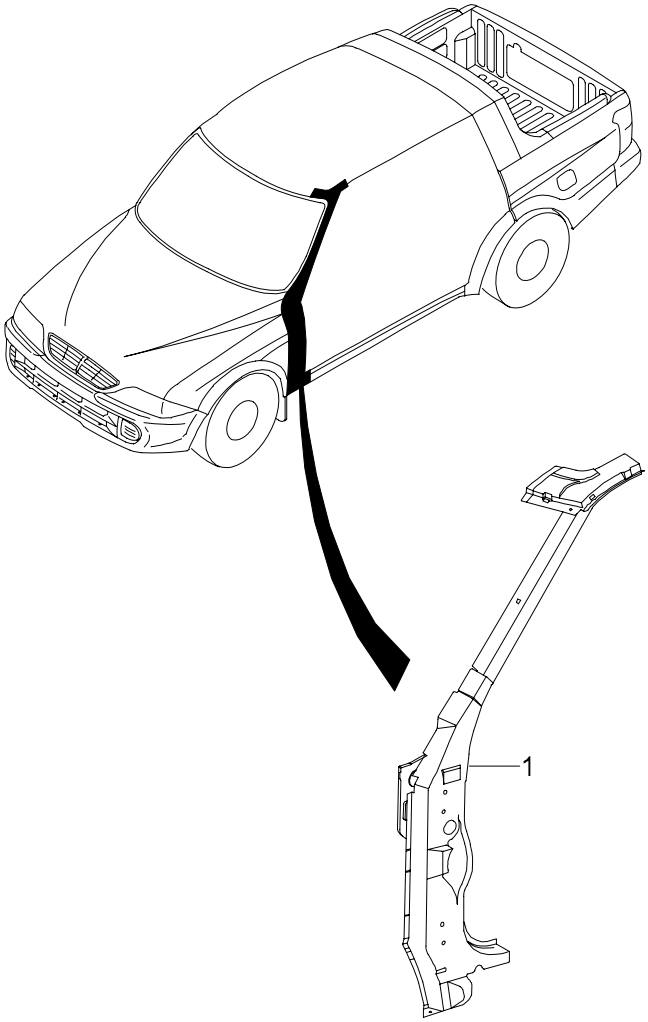

5230 A PILLAR

ITC	KEY NO. PART NO	PART NAME OPTION	L/R	T/M	DRV	MODEL 662LA									EFF. DATE FROM	EFF. DATE TO	REMARK
	[01]	*PLR ASSY-A*															
	5210105024		LH		L	1									02'1201	03'0302	
Y	5210105025		LH		L	1									03'0303	04'0419	
Y	5210105027		LH			1									04'0420	06'0228	
	5210205301		RH		L	1									02'1201	03'0302	
O	5210205302		RH		L	1									03'0303	03'0725	
Y	5210205303				L	1									03'0726	06'0228	

5240 B PILLAR

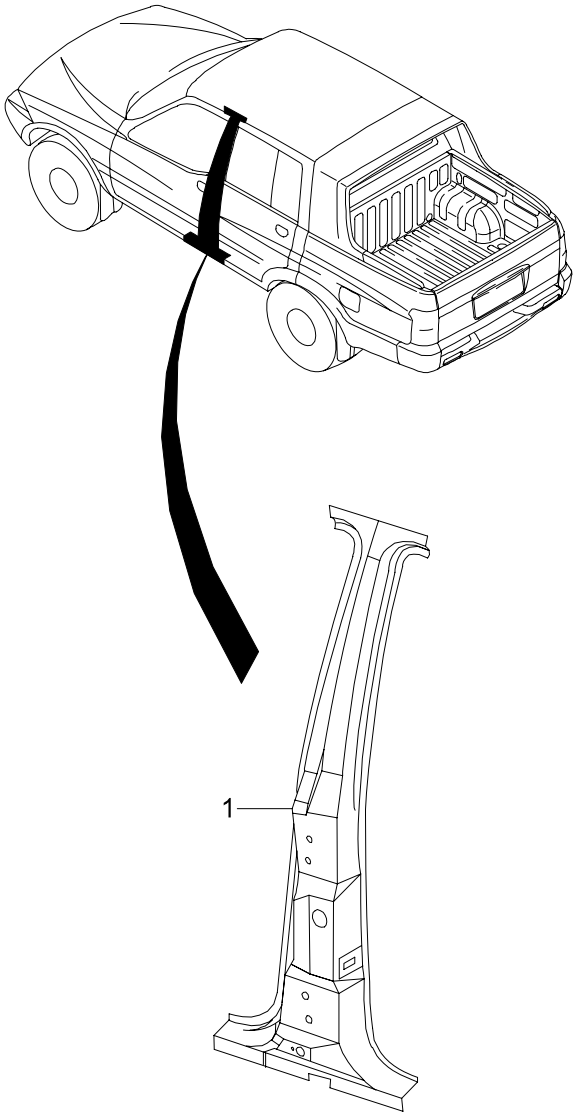

5240 B PILLAR

ITC	KEY NO. PART NO	PART NAME OPTION	L/R	T/M	DRV	MODEL 662LA									EFF. DATE FROM	EFF. DATE TO	REMARK
	[01]	*PLR ASSY-B*															
	5230105102		LH			1									02'1201	06'0228	SUPPLY ONLY ASS'Y
	5230205102		RH			1									02'1201	06'0228	SUPPLY ONLY ASS'Y

5250 DECK SIDE

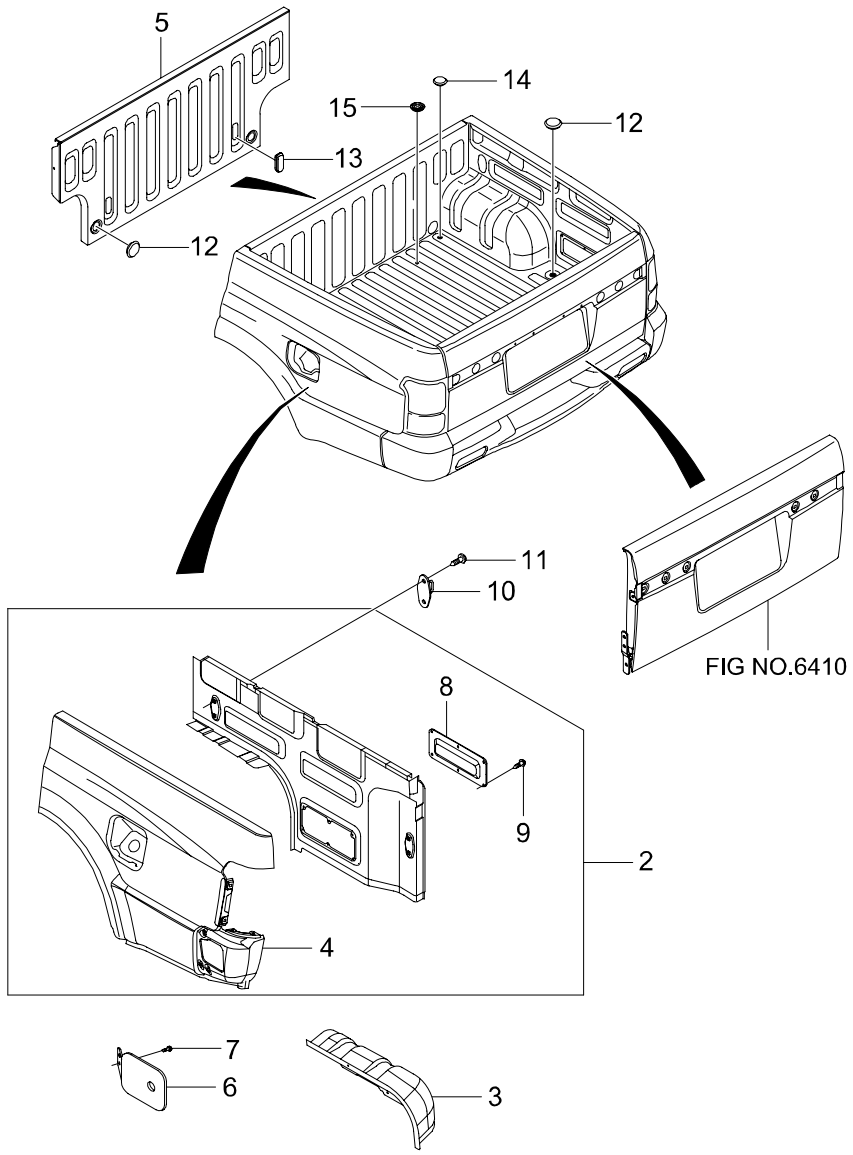

5250 DECK SIDE

ITC	KEY NO. PART NO	PART NAME OPTION	L/R	T/M	DRV	MODEL 662LA	EFF. DATE FROM	EFF. DATE TO	REMARK
	[02]	*PNL ASSY-DECK SIDE STRUCTURE*							
	5300107AS0		LH			1	02'1201	06'0228	W/OUT W/HOUSE
	5300207AS0		RH			1	02'1201	06'0228	W/OUT W/HOUSE
	[03]	*PNL ASSY-DECK WHEEL HOUSE INR*							
	5323607AS0		LH			1	02'1201	06'0228	WITH W/GUARD BKT
	5324607AS0		RH			1	02'1201	06'0228	WITH W/GUARD BKT
	[04]	*PNL ASSY-DECK SIDE OTR*							
	5311007000		LH			1	02'1201	06'0228	
	5312007000		RH			1	02'1201	06'0228	
	[05]	*PNL ASSY-DECK FRT*							
	5331007000					1	02'1201	06'0228	WITH REINF
	[06]	*PNL & HINGE ASSY-FUEL FILLER DR*							
	6361007001					1	02'1201	06'0228	
	[07]	*BOLT*							
	916040614D					2	02'1201	06'0228	
	[08]	*COVER-TOOLING HOLE*							
	5022107000					2	02'1201	06'0228	
	[09]	*SCREW*							
	937045016B					12	02'1201	06'0228	M5X16
	[10]	*HOOK ASSY-LUGGAGEAGE*							
	5023007000					4	02'1201	06'0228	
	[11]	*SCREW*							
	9368460201					8	02'1201	06'0228	M6X1.0
	[12]	*PLUG-BLIND*							
	9514040120					2	02'1201	06'0228	M40X1.2T
	[13]	*PLUG-BLIND*							
	6619975086					2	02'1201	06'0228	36X72
	[14]	*PLUG-BLIND*							
	9514030100					3	02'1201	06'0228	M30X1.0T

5250 DECK SIDE

ITC	KEY NO. PART NO	PART NAME OPTION	L/R	T/M	DRV	MODEL 662LA									EFF. DATE FROM	EFF. DATE TO	REMARK
	[15] 7386007000	*GROMMET-DECK TRIM DRAIN*				2										06'0228	

5510 ROOF PANEL

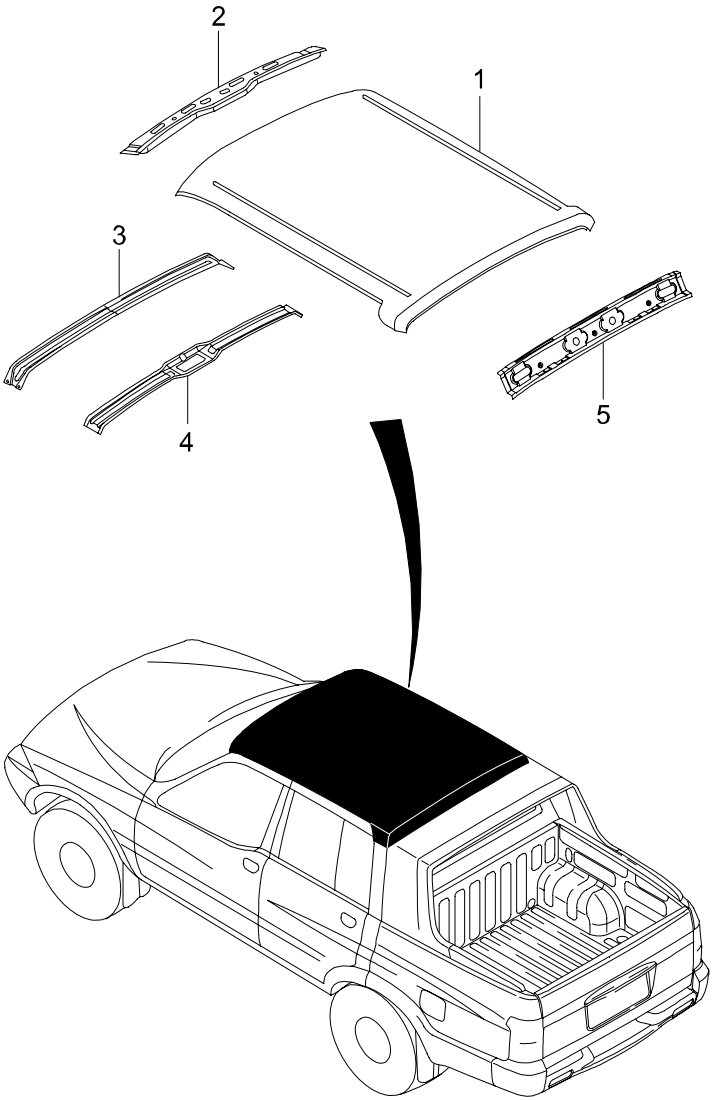

5510 ROOF PANEL

ITC	KEY NO. PART NO	PART NAME OPTION	L/R	T/M	DRV	MODEL 662LA									EFF. DATE FROM	EFF. DATE TO	REMARK
	[01]	*PNL ASSY-ROOF*															
	5511107000					1									02'1201	06'0228	
	[02]	*RAIL ASSY-ROOF FRT*															
	5531005001					1									02'1201	06'0228	
	5531005010	GLASS ANT				1									03'1226	06'0228	2004M/Y
	[03]	*RAIL ASSY-ROOF CTR NO1*															
	5532105001					1									02'1201	06'0228	
	[04]	*RAIL ASSY-ROOF CTR NO2*															
	5533105000					1									02'1201	06'0228	
	[05]	*RAIL ASSY-ROOF RR*															
	5535607000					1									02'1201	06'0228	

5610 FRONT FLOOR PANEL

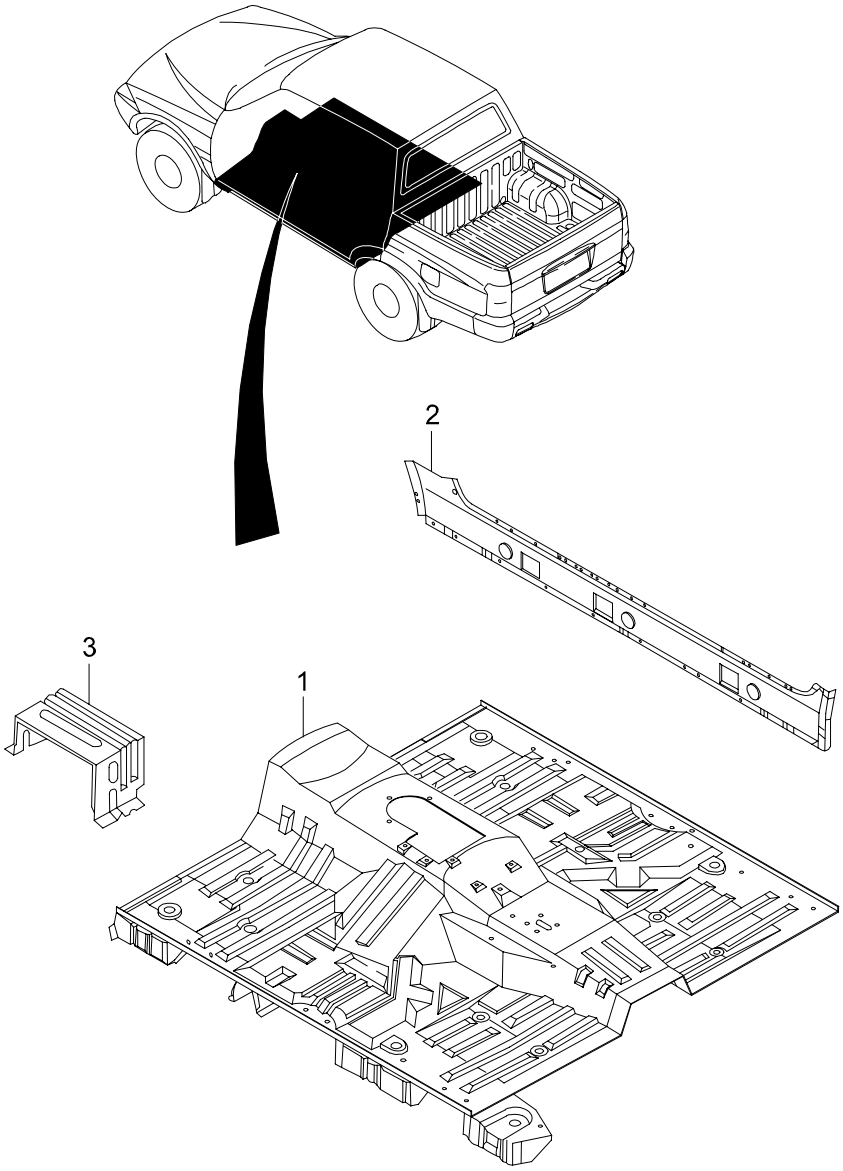

5610 FRONT FLOOR PANEL

ITC	KEY NO. PART NO	PART NAME OPTION	L/R	T/M	DRV	MODEL 662LA									EFF. DATE FROM	EFF. DATE TO	REMARK
	[01]	*PNL ASSY-FRT FLOOR*															
	5610005131					1									02'1201	06'0228	
	[02]	*PNL ASSY-SIDE SILL INR*															
	5671005004		LH			1									02'1201	06'0228	
	5676005004		RH			1									02'1201	06'0228	
	[03]	*BRKT-FOOT REST*															
	5751205000					1									02'1201	03'0203	
N	5751205001					1									03'0204	06'0228	

5620 REAR FLOOR PANEL

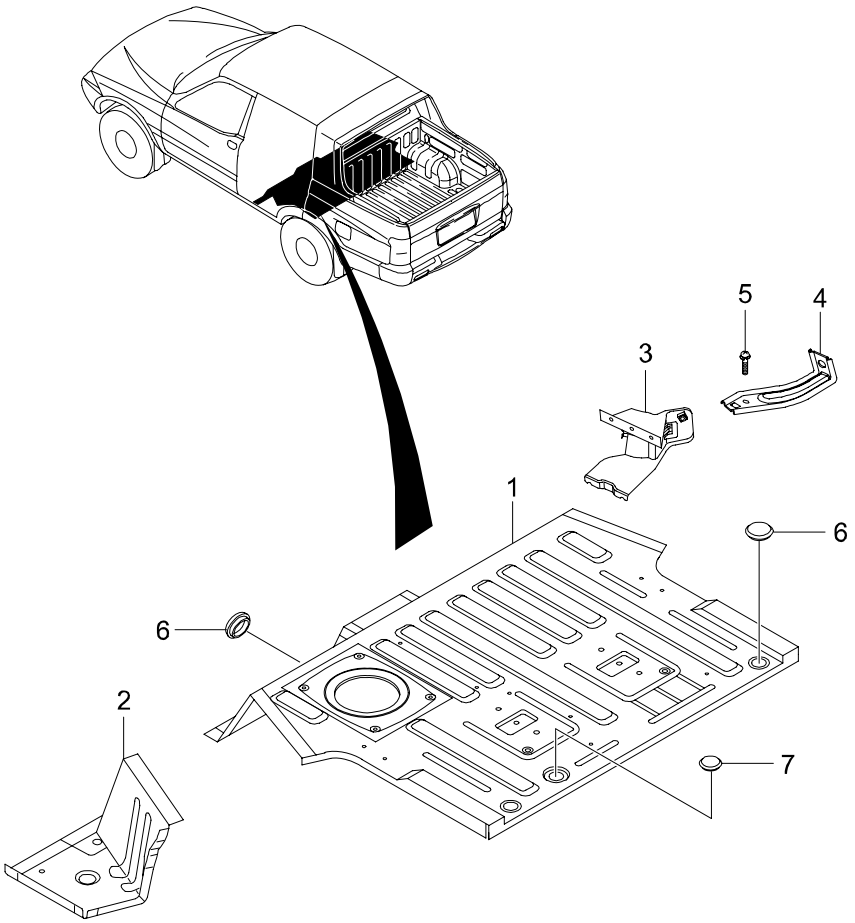

5620 - 01

5620 REAR FLOOR PANEL

ITC	KEY NO. PART NO	PART NAME OPTION	L/R	T/M	DRV	MODEL 662LA									EFF. DATE FROM	EFF. DATE TO	REMARK
	[01] 5650007000	*PNL ASSY-RR FLOOR*				1									02'1201	06'0228	
	[02] 5651307000	*EXTENSION ASSY-INTERM FLOOR*	LH			1									02'1201	06'0228	
	5653307000		RH			1									02'1201	06'0228	
	[03] 5651807000	*BRKT ASSY-SCREW JACK MTG*				1									02'1201	06'0228	
	[04] 7683907001	*BRKT-JACK COVER MTG*				1									02'1201	06'0228	
	[05] 980640620D	*SCREW*				1									02'1201	06'0228	M6X1.0X20
	[06] 9514030100	*PLUG-BLIND*				4									02'1201	06'0228	M30X1.0T
	[07] 9514020100	*PLUG-BLIND*				2									02'1201	06'0228	M20X1.0T

5630 DECK FLOOR PANEL

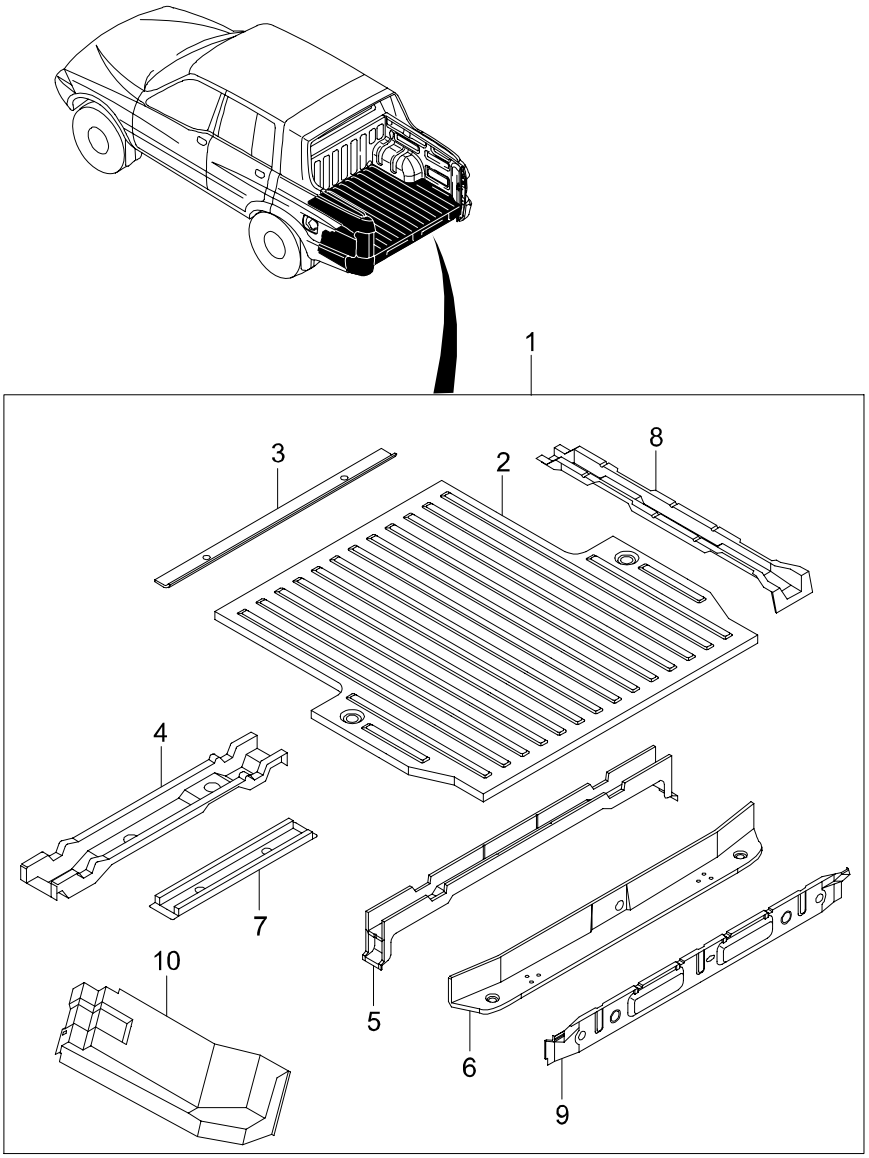

5630 DECK FLOOR PANEL

ITC	KEY NO. PART NO	PART NAME OPTION	L/R	T/M	DRV	MODEL 662LA									EFF. DATE FROM	EFF. DATE TO	REMARK
	[01] 5660007000	*PNL ASSY-DECK FLOOR*				1									02'1201	06'0228	
	[02] 5661107000	*PNL-DECK FLOOR*				1									02'1201	06'0228	
	[03] 5656107000	*MEMBER-DECK FLOOR NO1*				1									02'1201	06'0228	
	[04] 5657007000	*MEMBER ASSY-DECK FLOOR NO2*				1									02'1201	06'0228	
	[05] 5658007000	*MEMBER ASSY-DECK FLOOR NO3*				1									02'1201	06'0228	
	[06] 5659007000	*MEMBER ASSY-DECK FLOOR NO4*				1									02'1201	06'0228	
	[07] 5656307000	*MEMBER-DECK FLOOR NO5*				1									02'1201	06'0228	
	[08] 5655307000	*MEMBER-DECK FLOOR LONGI*				2									02'1201	06'0228	
	[09] 5654107000	*PNL-DECK BACK OTR*				1									02'1201	06'0228	
	[10]	*EXTENSION ASSY-DECK SIDE INR LWR*															
	5654607000		LH			1									02'1201	06'0228	
	5654807000		RH			1									02'1201	06'0228	

5710 FRONT END PANEL

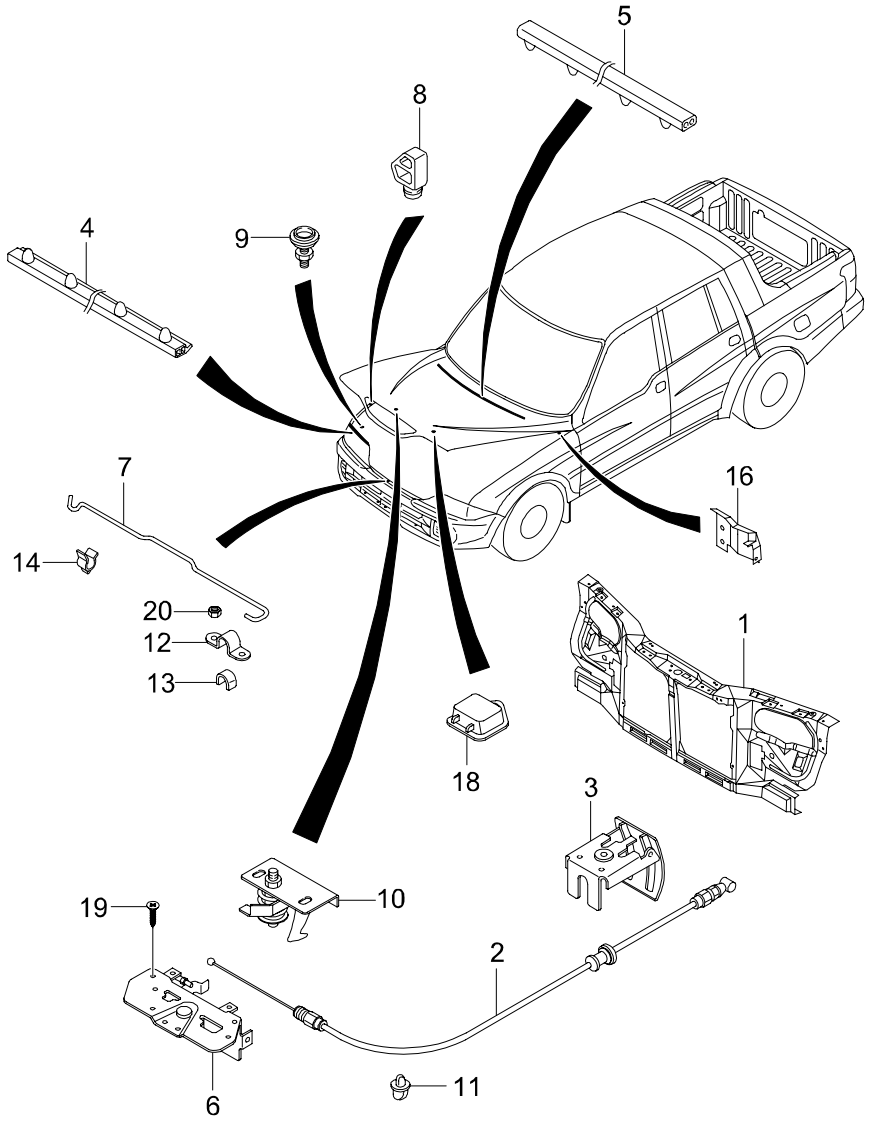

5710 FRONT END PANEL

ITC	KEY NO. PART NO	PART NAME OPTION	L/R	T/M	DRV	MODEL 662LA									EFF. DATE FROM	EFF. DATE TO	REMARK
	[01] 5710005145	*PNL ASSY-FRT END COWL*				1									02'1201	06'0228	
	[02] 7112005003	*CABLE-HOOD LATCH RELEASE*				1									02'1201	06'0228	
	[03] 7113005000AAT	*HANDLE ASSY-HOOD LATCH RELEASE*				1									02'1201	06'0228	
	[04] 7114005050	*STRIP ASSY-HOOD H/LAMP SEAL*	LH			1									02'1201	06'0228	
	7115005050		RH			1									02'1201	06'0228	
	[05] 7115005000	*STRIP ASSY-HOOD SEAL-RR*				1									02'1201	06'0228	
	[06] 7111006002	*LATCH ASSY-HOOD*				1									02'1201	06'0228	
	[07] 7117105050	*ROD-HOOD STAY*				1									02'1201	06'0228	
	[08] 7118005000	*BUMPER-HOOD GUIDE*				2									02'1201	06'0228	
	[09] 7118105001	*BUMPER ASSY-HOOD OVERSLAM*				2									02'1201	06'0228	
	[10] 7119005050	*STRIKER ASSY-HOOD*				1									02'1201	06'0228	
	[11] 7162805000	*CLIP*				1									02'1201	06'0228	
	[12] 7215201001	*BRKT-HOOD STAY ROD MTG NO1*				1									02'1201	07'0131	
Y	7215201002					1									07'0201		
	[13] 7215301002	*RETAINER-HOOD STAY ROD*				1									02'1201	06'0228	PLASTICS
	[14] 7117305000	*CLIP*				1									02'1201	06'0228	

5710 FRONT END PANEL

ITC	KEY NO. PART NO	PART NAME OPTION	L/R	T/M	DRV	MODEL 662LA									EFF. DATE FROM	EFF. DATE TO	REMARK
	[16]	*BUMPER-HOOD CONNER SEALING RR*															
	7114205002		LH			1									02'1201	06'0228	
	7115205002		RH			1									02'1201	06'0228	
	[18]	*HOLDER-HOOD STAY ROD*															
	7117205000					1									02'1201	06'0228	
	[19]	*SCREW*															
	7120905001					1									02'1201	06'0228	
	[20]	*NUT*															
	928840600D					1									02'1201	06'0228	M6X1.0

5720 FENDER & APRON PANEL

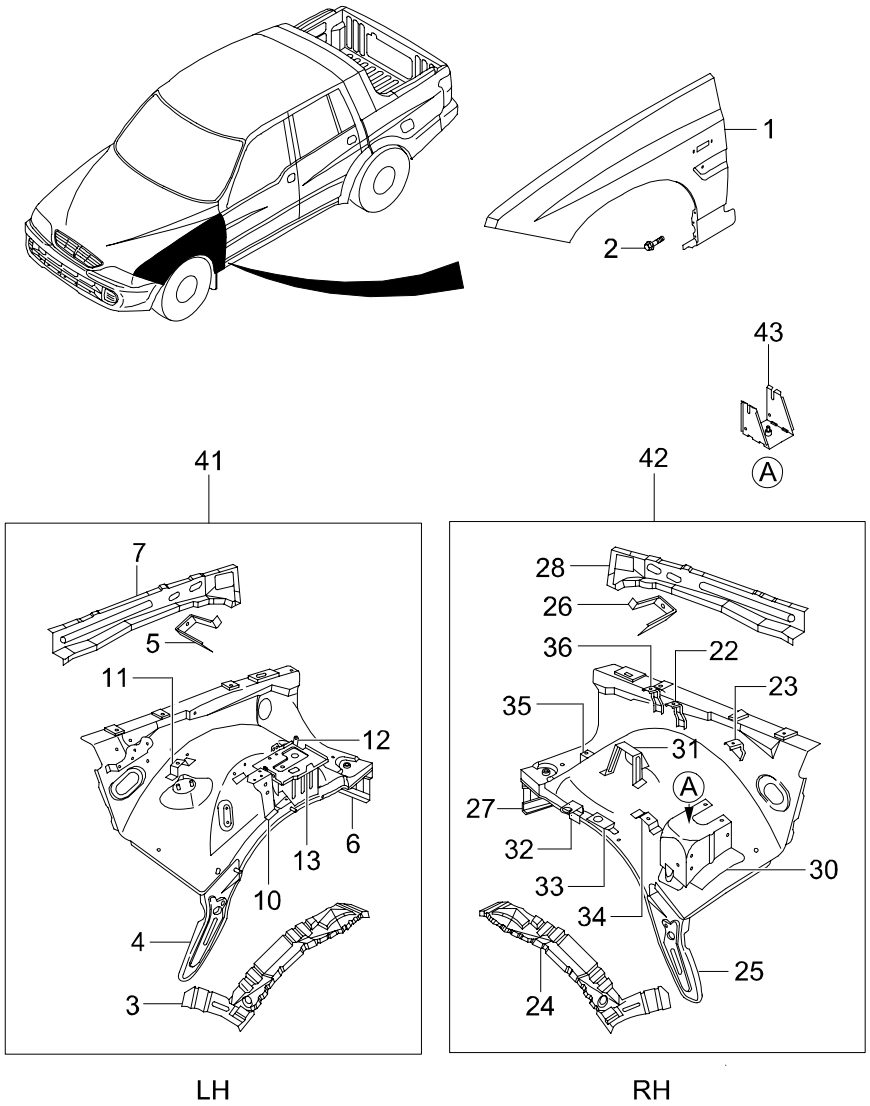

5720 FENDER & APRON PANEL

ITC	KEY NO. / PART NO	PART NAME / OPTION	L/R	T/M	DRV	MODEL 662LA	EFF. DATE FROM	EFF. DATE TO	REMARK
	[01]	*PNL ASSY-FENDER*							
	5181105223	STD	LH			1	02'1201	06'0228	NARROW GANISH
	5182105223	STD	RH			1	02'1201	06'0228	NARROW GANISH
	[02]	*BOLT*							
	6181905001					4	02'1201	06'0228	
	[03]	*REINF-FENDER APRON LWR*							
	5737905000		LH			1	02'1201	06'0228	
	[04]	*EXTENSION-FRT APRON RR LWR*							
	5731305000		LH			1	02'1201	06'0228	
	[05]	*BRKT-FENDER MTG*							
	5731405001		LH			1	02'1201	06'0228	
	[06]	*BRKT-BODY MTG NO1*							
	5731605000		LH			1	02'1201	06'0228	
	[07]	*MEMBER ASSY-FRT APRON UPR*							
	5733005011		LH			1	02'1201	06'0228	
	[10]	*BRKT-RELAY BOX MTG*							
	5733405041					1	02'1201	06'0228	
	[11]	*BRKT-RELAY BOX MTG SIDE*							
	5733605000					1	02'1201	06'0228	
	[12]	*BRKT-WASHER RESERVIOR MTG*							
	5743605020					1	02'1201	06'0228	
	[13]	*PLATE ASSY-BATTERY TRAY*							
	5735005024					1	02'1201	06'0228	
	[22]	*BRKT ASSY-RADIATOR RESERVIOR FRT UPR MTG*							
	5737205000					1	02'1201	06'0228	
	[23]	*BRKT-RADIATOR RESERVOIR RR UPR MTG*							
	5737405000					1	02'1201	06'0228	
	[24]	*REINF-FENDER APRON LWR*							
	5738905000					1	02'1201	06'0228	

5720 FENDER & APRON PANEL

ITC	KEY NO. / PART NO	PART NAME / OPTION	L/R	T/M	DRV	MODEL 662LA	EFF. DATE FROM	EFF. DATE TO	REMARK
	[25] 5732305000	*EXTENSION-FRT APRON RR LWR*	RH			1	02'1201	06'0228	
	[26] 5732405001	*BRKT-FENDER MTG*	RH			1	02'1201	06'0228	
	[27] 5732605000	*BRKT-BODY MTG NO1*	RH			1	02'1201	06'0228	
	[28] 5734005011	*MEMBER ASSY-FRT APRON UPR*	RH			1	02'1201	06'0228	
	[30] 5736805031	*SUPT-ABS MODULATOR MTG*				1	02'1201	06'0228	
	[31] 5737605040	*BRKT ASSY-RADIATOR RESERVIOR LWR MTG*				1	02'1201	06'0228	
	[32] 5741605040	*BRKT ASSY-AIR CLEANER MTG NO1*				1	02'1201	06'0228	
	[33] 5741805040	*BRKT ASSY-AIR CLEANER MTG NO2*				1	02'1201	06'0228	
	[34] 5744505040	*BRKT-RADIATOR RESERVOIR LWR*				1	02'1201	06'0228	
	[35] 5744605040	*BRKT-JOINT BOX MTG*				1	02'1201	06'0228	
	[36] 5744805000	*BRKT ASSY-HOOD SWITCH MTG*				1	02'1201	06'0228	
	[41] 5730105247	*PNL ASSY-FRT APRON*	LH			1	02'1201	06'0228	
	[42] 5730205243	*PNL ASSY-FRT APRON*	RH			1	02'1201	06'0228	
	[43] 5748606000	*PLATE ASSY-ABS5.3 MODUL MTG* ABS				1	02'1201	06'0228	

5730 DASH PANEL & COWL

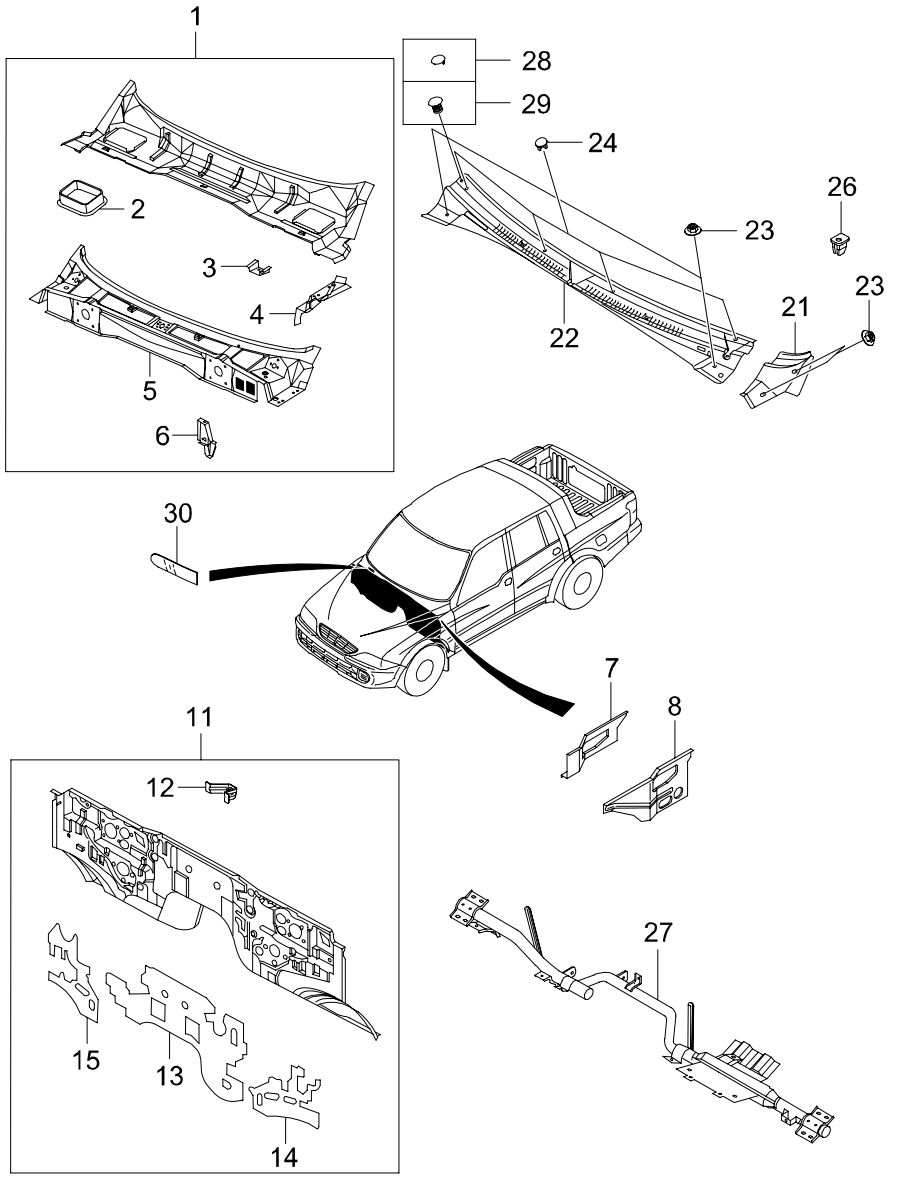

5730 DASH PANEL & COWL

ITC	KEY NO. PART NO	PART NAME OPTION	L/R	T/M	DRV	MODEL 662LA									EFF. DATE FROM	EFF. DATE TO	REMARK
	[01]	*COWL ASSY*															
	5130105300					1									02'1201	06'0228	
	[02]	*BRKT-AIR PLENUM CHAMBER*															
	5131305001					1									02'1201	06'0228	
	[03]	*BRKT-CLUTCH PEDAL BOX MTG*															
	5135505000					1									02'1201	06'0228	
	[04]	*SUPT-COWL SIDE UPR*															
	5135005001		LH			1									02'1201	06'0228	
	5136005001		RH			1									02'1201	06'0228	
	[05]	*PNL ASSY-COWL UPR*															
	5137005006					1									02'1201	06'0228	
	[06]	*EXTENSION-COWL UPR SIDE*															
	5137305000		LH			1									02'1201	06'0228	
	5138205000		RH			1									02'1201	06'0228	
	[07]	*MEMBER-COWL SIDE UPR*															
	5193105000		LH			1									02'1201	06'0228	
	5194105000		RH			1									02'1201	06'0228	
	[08]	*MEMBER-COWL SIDE UPR OTR*															
	5193305003		LH			1									02'1201	06'0228	
	5194305002		RH			1									02'1201	06'0228	
	[11]	*PNL ASSY-DASH*															
	5750005116			A		1									02'1201	04'0709	
O	5750005117			A	L	1									04'0710	06'0228	
	5750005108			M	L	1									02'1201	04'0709	
O	5750005109			M	L	1									04'0710	06'0228	
	[12]	*BRKT-BLOWER MTG*															
	5753405000					1									02'1201	06'0228	
	[13]	*SEAT-DASH PNL DEADENING*															
	5755105002					1									02'1201	06'0228	
	[14]	*SEAT-DASH PNL DEADENING*															
	5755205000		LH			1									02'1201	06'0228	

5730 DASH PANEL & COWL

ITC	KEY NO. PART NO	PART NAME OPTION	L/R	T/M	DRV	MODEL 662LA	EFF. DATE FROM	EFF. DATE TO	REMARK
	[15]	*SEAT-DASH PNL DEADENING*							
	5755305000		RH			1	02'1201	06'0228	
	[21]	*COVER-COWL TOP CNR*							
	7941105001		LH			1	02'1201	06'0228	
	7942105001		RH			1	02'1201	06'0228	
	[22]	*COVER ASSY-COWL TOP CTR*							
	7941005005					1	02'1201	04'0401	
O	7941005007					1	04'0402	04'0901	
Y	7941005008					1	04'0902	06'0228	
	7941005907				R	1	02'0901	04'0901	
Y	7941005908				R	1	04'0902	06'0228	
	[23]	*CAP NUT-CORNER COVER MTG*							
	6616823285					6	02'1201	06'0228	
	[24]	*CAP-CTR COVER MTG A*							
	7941505000					4	02'1201	06'0228	
	[26]	*GROMMET-COWL TOP COVER MTG*							
	7941705001					4	02'1201	06'0228	
	[27]	*MEMBER ASSY-COWL CROSS*							
	5150105203					1	02'1201	03'0320	
Y	5150105204					1	03'0321	06'0228	LHD ONLY
	[28]	*CAP-CTR COVER MTG C*							
	7941905000					1	04'0402	06'0228	
	[29]	*CAP-CTR COVER MTG B*							
	7941805000					1	04'0402	06'0228	
	[30]	*FILM-WATER DEFLECTOR*							
	7945205001					1	02'1201	06'0228	

6110 HOOD PANEL

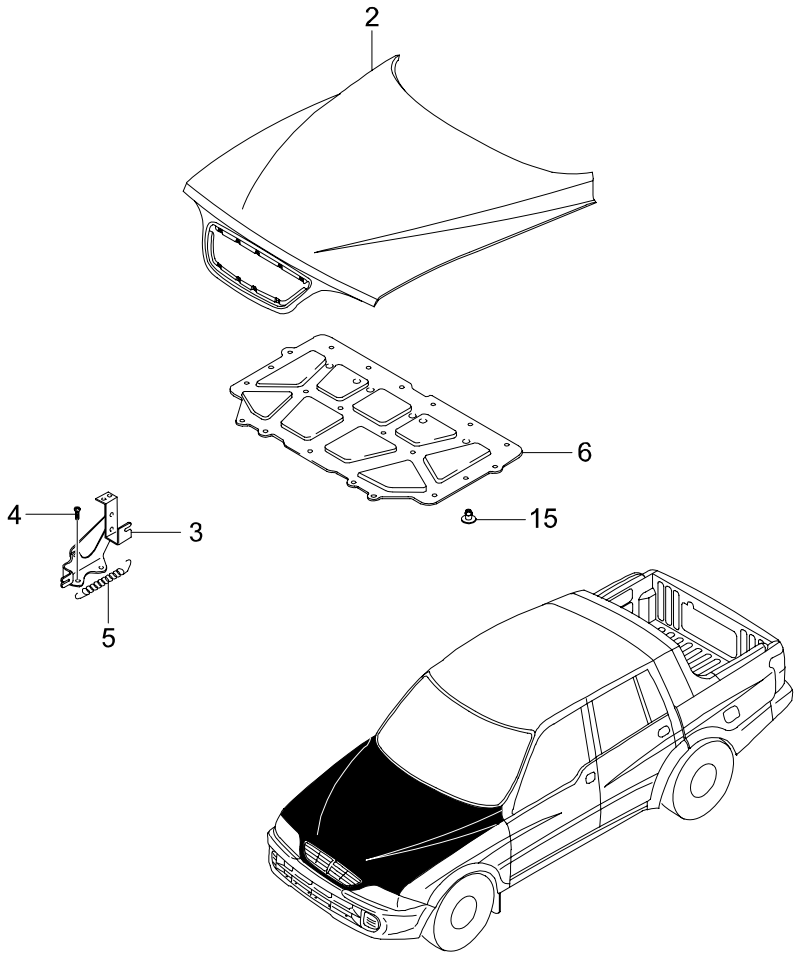

6110 HOOD PANEL

ITC	KEY NO. PART NO	PART NAME OPTION	L/R	T/M	DRV	MODEL 662LA									EFF. DATE FROM	EFF. DATE TO	REMARK
	[02] 6102005080	*PNL ASSY-HOOD*				1									02'1201	06'0228	
	[03] 6183005001	*HINGE ASSY-HOOD*	LH			1									02'1201	06'0228	
Y	6184005001		RH			1									02'1201	06'0228	
	[04] 6181905001	*BOLT*				1									02'1201	06'0228	
	[05] 6186005001	*SPRING-HOOD HINGE*				2									02'1201	06'0228	
	[06] 7116005053	*PAD-HOOD INSULATION*				1									02'1201	06'0228	
	[15] 7116105001	*FASTENER*				26									02'1201	06'0228	

6210 FRONT DOOR PANEL

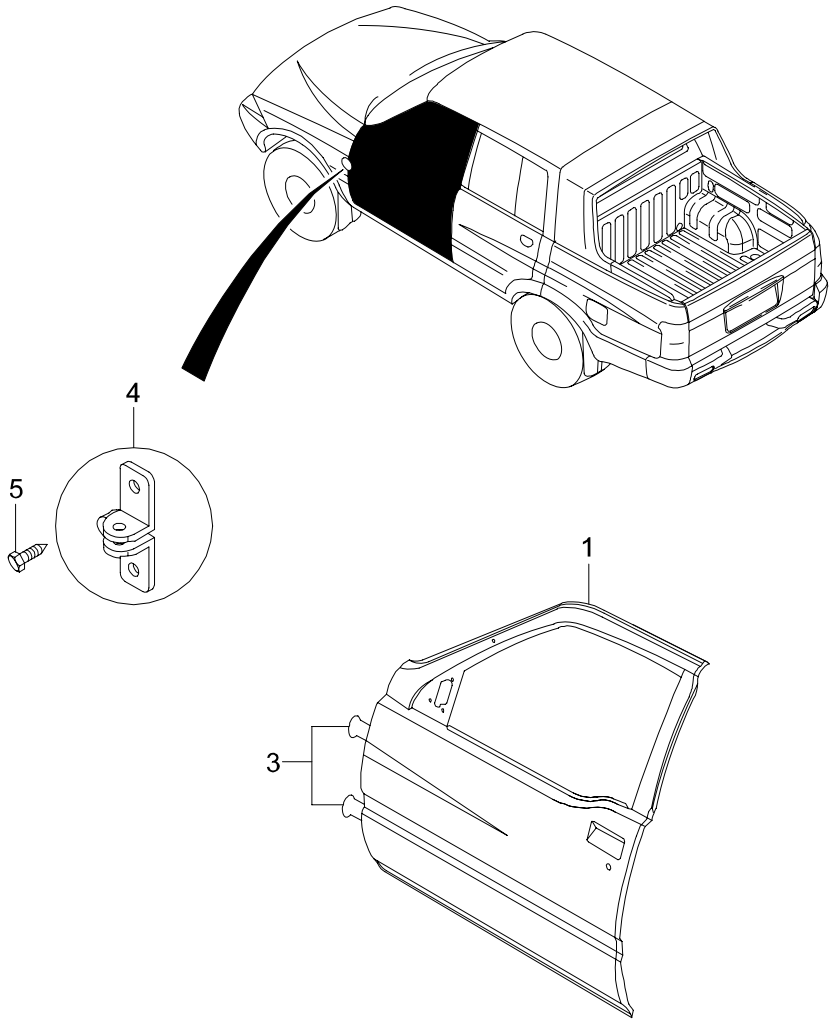

6210 FRONT DOOR PANEL

ITC	KEY NO. PART NO	PART NAME OPTION	L/R	T/M	DRV	MODEL 662LA									EFF. DATE FROM	EFF. DATE TO	REMARK
	[01]	*PNL ASSY-FRT DR*															
	6200105065		LH			1									02'1201	06'0228	WITHOUT HINGE
	6200205065		RH			1									02'1201	06'0228	WITHOUT HINGE
	[03]	*HINGE ASSY*															
	6281005000					1									02'1201	06'0228	(FRT LWR LH,UPR RH)RR LWR LH
	6282005000					1									02'1201	06'0228	(FRT LWR RH,UPR LH)RR LWR RH
	[04]	*BRKT-DR CHECKER MTG*															
	6290105004					2									02'1201	06'0228	
	[05]	*SCREW*															
	6290205000					4									02'1201	06'0228	

6310 REAR DOOR PANEL

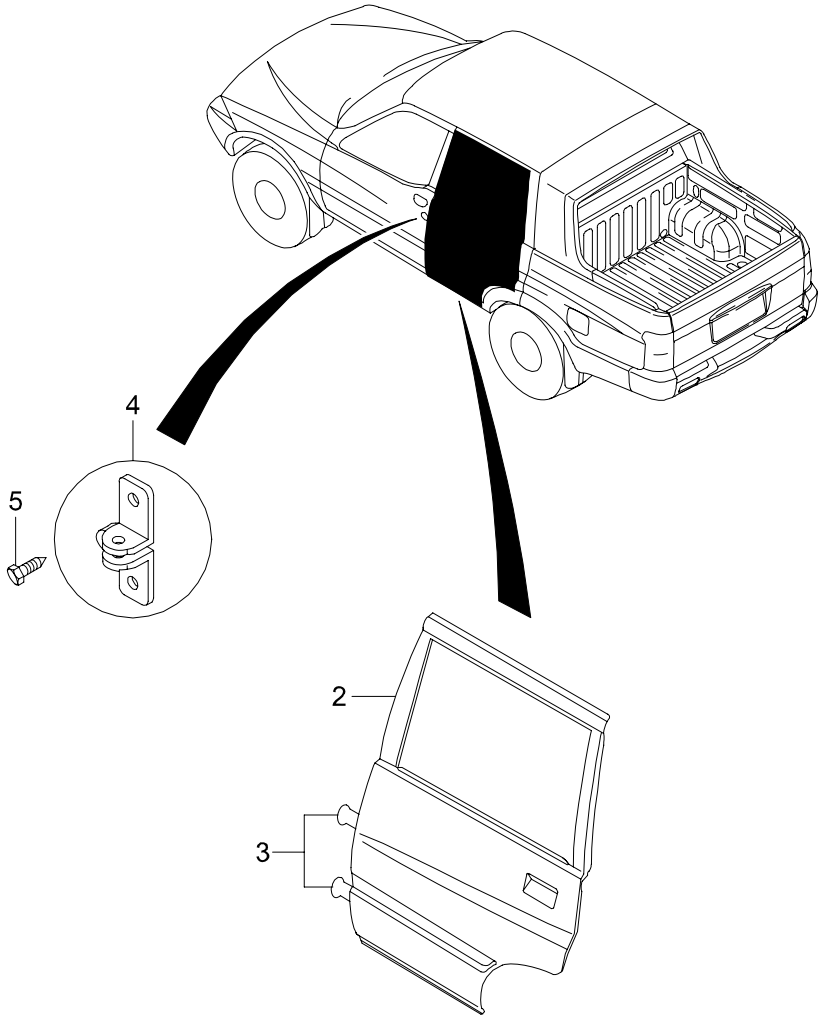

6310 REAR DOOR PANEL

ITC	KEY NO. PART NO	PART NAME OPTION	L/R	T/M	DRV	MODEL 662LA									EFF. DATE FROM	EFF. DATE TO	REMARK
	[02]	*PNL ASSY-RR DR*															
	6300105064		LH			1									02'1201	06'0228	WITHOUT HINGE
	6300205064		RH			1									02'1201	06'0228	WITHOUT HINGE
	[03]	*HINGE ASSY*															
	6281005000					1									02'1201	06'0228	(FRT LWR LH,UPR RH)RR LWR LH
	6282005000					1									02'1201	06'0228	(FRT LWR RH,UPR LH)RR LWR RH
	6381005000		LH			1									02'1201	06'0228	RR UPR LH
	6382005000		RH			1									02'1201	06'0228	RR UPR RH
	[04]	*BRKT-DR CHECKER MTG*															
	6290105004					2									02'1201	06'0228	
	[05]	*SCREW*															
	6290205000					4									02'1201	06'0228	

6410 TAIL GATE PANEL

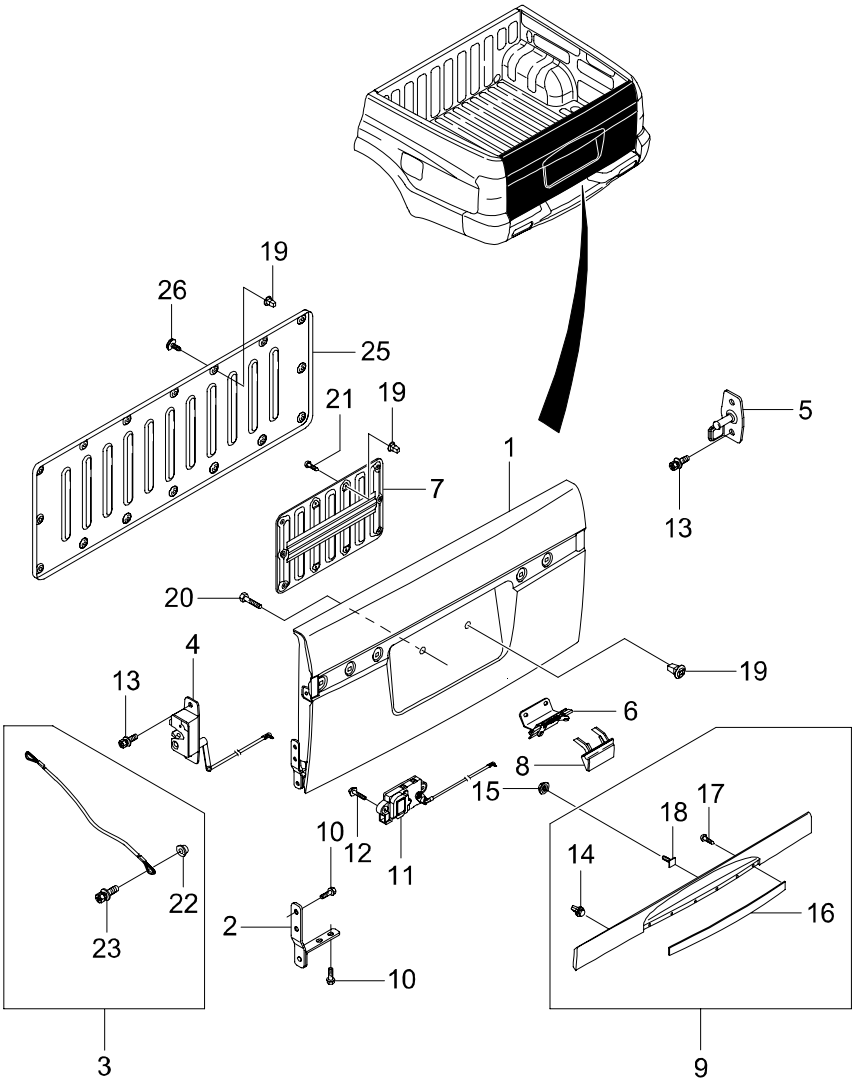

6410 TAIL GATE PANEL

ITC	KEY NO. PART NO	PART NAME OPTION	L/R	T/M	DRV	MODEL 662LA	EFF. DATE FROM	EFF. DATE TO	REMARK
	[01]	*PNL & HINGE ASSY-T/GATE*							
	6400107011					1	02'1201	03'0302	WITH HINGE
O	6400107100	2003M/Y				1	03'0303	06'0228	WITH HINGE
	6400107200	RR FOG				1	03'0303	06'0228	EU
	[02]	*HINGE ASSY-T/GATE*							
	6481007001		LH			1	02'1201	06'0228	
	6482007001		RH			1	02'1201	06'0228	
	[03]	*CABLE & BOLT ASSY-STOPPER*							
	7147007000					2	02'1201	06'0228	
	[04]	*LATCH & ROD ASSY-T/GATE*							
	7141007000		LH			1	02'1201	06'0228	
	7142007000		RH			1	02'1201	06'0228	
	[05]	*STRIKER ASSY-T/GATE*							
	7143007000		LH			1	02'1201	06'0228	
	7143107000		RH			1	02'1201	06'0228	
	[06]	*CRANK ASSY-T/GATE O/S HANDLE*							
	7144007000					1	02'1201	03'0302	
N	7144007010	2003M/Y				1	03'0303	06'0228	
	[07]	*COVER ASSY-T/GATE INR*							
	7149007000					1	02'1201	06'0228	
	[08]	*HANDLE ASSY-T/GATE O/S*							
	7145007000					1	02'1201	06'0228	
	[09]	*GARNISH ASSY-T/GATE*							
	7961007000HBG					1	02'1201	06'0228	WITH CHROME MOLDING
	[10]	*BOLT-FLANGE*							
	6381905001					8	02'1201	06'0228	M8X1.25, FLANGE
	[11]	*ROD ACTR ASSY-T/GATE DR LOCK*							
	8837007001	2003M/Y				1	03'0303	06'0228	ADD T/GATE LOCKING
	[12]	*BOLT*							
	916270610D					2	03'0303	06'0228	ACTUATOR MTG

6410 TAIL GATE PANEL

ITC	KEY NO. PART NO	PART NAME OPTION	L/R	T/M	DRV	MODEL 662LA									EFF. DATE FROM	EFF. DATE TO	REMARK
	[13] 982740620D	*SCREW*				8									02'1201	06'0228	M6X1.0X20
	[14] 7955706000	*CLIP-DR MOULDING MTG*				6									02'1201	06'0228	
	[15] 928840600D	*NUT*				6									02'1201	06'0228	M6X1.0
	[16] 7961207000	*MOULDING-T/GATE*				1									02'1201	06'0228	CHROME COATING
	[17] 938044012B	*SCREW*				6									02'1201	06'0228	M4X12
	[18] 7943305800	*BOLT*				4									02'1201	06'0228	
	[19] 7963306000	*GROMMET*				27									02'1201	06'0228	
	[20] 7979703002	*BOLT*				1									02'1201	06'0228	FIXING LICENCE PLATE
	[21] 938046016D	*SCREW*				10									02'1201	06'0228	M6X16
	[22] 6481507000	*BUSH-STOPPER MTG*				4									02'1201	06'0228	
	[23] 959170830D	*BOLT*				4									02'1201	06'0228	M8X1.25X30
	[25] 7385007000	*TRIM ASSY-TAIL GATE*				1										06'0228	
O	7385007002					1									02'1201	06'0228	PVC
	[26] 984156020D	*SCREW*				16									02'1201	06'0228	M6X20

6810 AIR CONDITIONER KIT

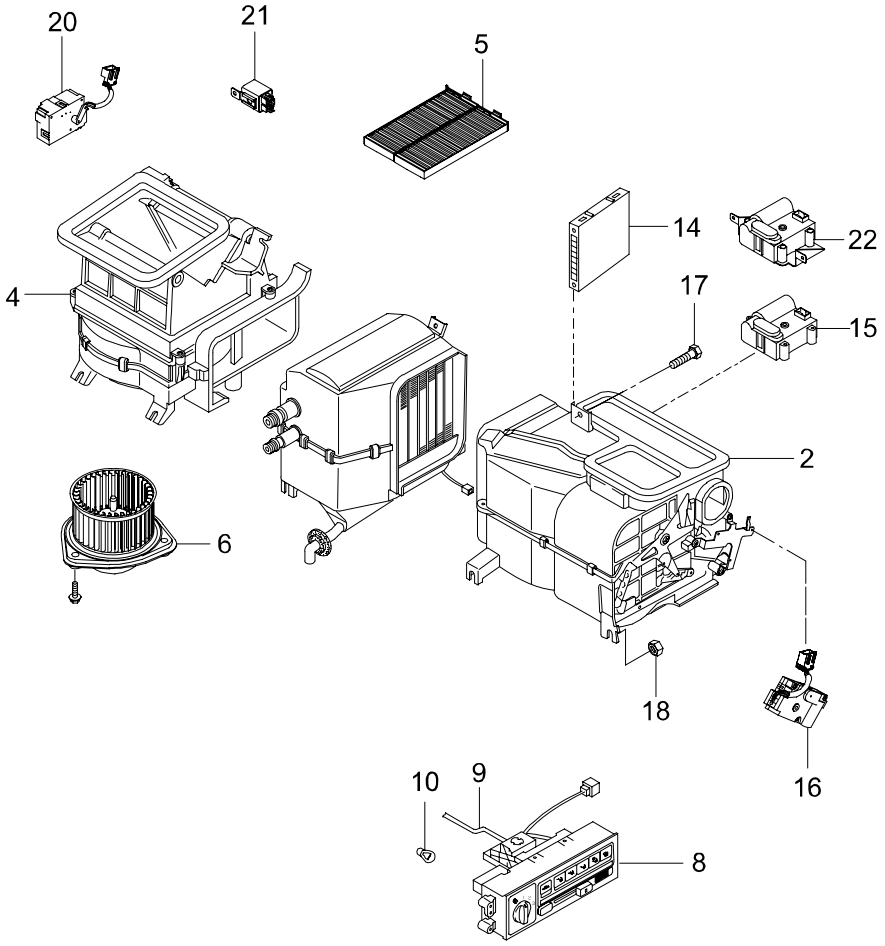

6810 AIR CONDITIONER KIT

ITC	KEY NO. PART NO	PART NAME OPTION	L/R	T/M	DRV	MODEL 662LA	EFF. DATE FROM	EFF. DATE TO	REMARK
	[02]	*HEATER UNIT*							
	6912005032	MNL				1	02'1201	06'0228	DHC,INCLUDE KEY NO[08] CONTROL PNL
	6912005012	MNL				1	02'1201	06'0228	HCC,INCLUDE KEY NO.[08] CONTROL PNL
	6910005231	SEMI AUTO			L	1	02'0901	06'0228	
	6910005832	AUTO			R	1	03'1226	06'0228	
	6910005401	F/AUTO				1	02'1201	06'0228	DHC
	6910005411	F/AUTO				1	02'1201	06'0228	HCC
	[04]	*BLOWER UNIT-MANUAL*							
	6920005102	MANUAL				1	02'1201	06'0228	DHC
	6920005110	MANUAL				1	02'1201	06'0228	HANLLA
	6920005402	F/AUTO				1	02'1201	06'0228	DHC
	6920005410	F/AUTO				1	02'1201	06'0228	HCC
	6920005801	S/AUTO			R	1	02'1201	06'0228	DHC
	[05]	*FILTER ASSY-BLOWER UNIT*							
	6923005400					1	02'1201	06'0228	DEAHANCALSONIC
	6923005410					1	02'1201	06'0228	HANLLA
	[06]	*FAN & MOTOR ASSY-BLOWER UNIT*							
	6921005401				L	1	02'1201	06'0228	DEAHANCALSONIC
	6921005410				L	1	02'1201	06'0228	HANLLA
	6921005900				R	1	02'1201	05'0423	DHC
	[08]	*PNL ASSY-HEATER CONTROL*							
	8532005001	MANUAL				1	02'1201	06'0228	DEAHANCALSONIC
	8532005501	MANUAL				1	02'1201	06'0228	HANLLA
	8533005010	SEMI AUTO				1	04'1115	05'1231	UNLEADED BULB USE,DHC
	6870005400	F/AUTO				1	02'0901	04'1212	DHC
O	6870005440	F/AUTO				1	04'1213	06'0228	
	[09]	*CABLE-HEATER CONTROL PNL*							
	69115050A0					1	02'1201	06'0228	
	[10]	*BULB*							
	85330050A0	SEMI AUTO				1	02'1201	06'0228	DHC,FOR 8533005010 CONTROL PNL
	85330055A0	SEMI AUTO				1	02'1201	06'0228	HCC,FOR 85330-05501 CONTROL PNL
	68700054A0	FATC				2	02'1201	06'0228	GRAY
	[14]	*AMP ASSY-AUTO*							
	6910105210	MANUAL,SEMI AUTO				1	02'0901	06'0228	HANLLA

6810 AIR CONDITIONER KIT

ITC	KEY NO. / PART NO	PART NAME / OPTION	L/R	T/M	DRV	MODEL 662LA									EFF. DATE FROM	EFF. DATE TO	REMARK
	6910205230	MANUAL,SEMI AUTO							1							02'1201	06'0228 DEAHANCALSONIC
	[15]	*ACTUATOR ASSY-MIX*															
	69113050A0	MANUAL				1									02'1201	06'0228	DEAHANCALSONIC
	69113051A0	MANUAL				1									02'1201	06'0228	HANLLA
	[16]	*ACTUATOR ASSY-MODE*															
	69114050A0	MANUAL				1									02'1201	06'0228	DEAHANCALSONIC,10 P, INCASE RHD USE BRKT ON VEHICLE

6810 AIR CONDITIONER KIT

ITC	KEY NO. PART NO	PART NAME OPTION	L/R	T/M	DRV	MODEL 662LA									EFF. DATE FROM	EFF. DATE TO	REMARK
	[16]	*ACTUATOR ASSY-MODE*															
	6911305400	F/AUTO				1									02'1201	06'0228	DHC
	6911305010	MANUAL,SEMI AUTO				1									02'1201	06'0228	HANLLA
	[17]	*SCREW*															
	982840620D					1									02'1201	06'0228	
	[18]	*NUT*															
	9307406007					1									02'1201	06'0228	
	[20]	*ACTUATOR ASSY-INTAKE*															
	6922005000	MNL,S/AUTO,F/AUTO				1									02'1201	06'0228	DHC/HCC COMMON
	[21]	*RELAY-BLOWER UNIT*															
	6921105210					1									02'1201	06'0228	
	[22]	*ACTUATOR ASSY-TEMP*															
	6910205210	SEMI AUTO			L	1									02'1201	06'0228	
	6910305230	SEMI AUTO			L	1									02'1201	06'0228	
	6910305830				R	1									02'1201	06'0228	DHC

6820 AIR CONDITIONER HOSE & PIPE LINE

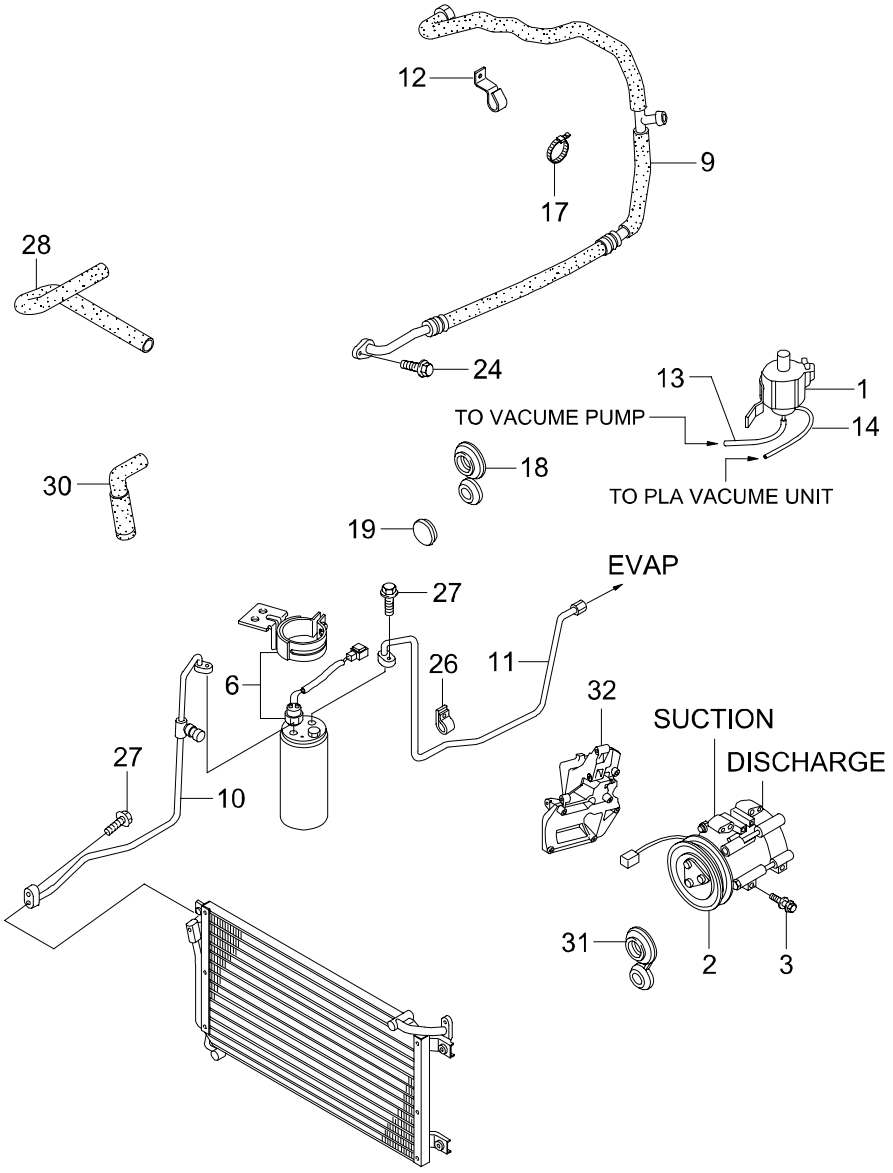

6820 AIR CONDITIONER HOSE & PIPE LINE

ITC	KEY NO. PART NO	PART NAME OPTION	L/R	T/M	DRV	MODEL 662LA									EFF. DATE FROM	EFF. DATE TO	REMARK
	[01]	*VALVE ASSY-SOLENOID*															
	8758005810					1									02'1201	04'0108	
O	8758005811			A		1									04'0109	06'0228	
	[02]	*COMPRESSOR ASSY-AIRCON*															
	6611303615					1									02'1201	06'0228	
	[03]	*BOLT*															
	914011008013					4									02'1201	06'0228	M8X105
	[06]	*DRIER ASSY-RECEIVER*															
	6851005250					1									02'1201	06'0228	
	[09]	*HOSE-SUCTION*															
	6862005211					1									02'1201	06'0228	
	[10]	*PIPE-LIQUID A*															
	6863005260					1									02'1201	06'0228	
	[11]	*PIPE-LIQUID B*															
	6864005260					1									02'1201	06'0228	
	[12]	*CLIP*															
	6865505000					1									02'1201	06'0228	
	[13]	*HOSE-VACUUM*															
	6882005011					1									02'1201	06'0228	
	[14]	*HOSE-VACUUM*															
	6882505011					1									02'1201	06'0228	
	[17]	*BAND*															
	8295205000					1									02'1201	06'0228	
	8295205030					1									02'1201	06'0228	HANLLA
	[18]	*GROMMET-A/CON*															
	6832005001					1									02'1201	06'0228	
	[19]	*PLUG-BLIND*															
	9514030100					1									02'1201	06'0228	M30X1.0T
	[24]	*BOLT*															
	916070825D					2									02'1201	06'0228	M8X1.25X25

6820 AIR CONDITIONER HOSE & PIPE LINE

ITC	KEY NO. PART NO	PART NAME OPTION	L/R	T/M	DRV	MODEL 662LA									EFF. DATE FROM	EFF. DATE TO	REMARK
	[26] 9440708001	*CLIP*				1									02'1201	06'0228	
	[27] 982740625D	*SCREW*				1									02'1201	06'0228	M6X1.0X25
	[28] 6941105004	*HOSE-WATER INLET*				1									02'1201	06'0228	
	[30] 6942005007	*HOSE-WATER OUTLET*				1									02'1201	06'0228	
	[31] 6943105000	*GROMMET-HEATER PIPE*				2									02'1201	06'0228	
	[32] 6612304039	*BRKT ASSY-A/CON COMP*				1									02'1201	06'0228	

6830 AIR DISTRIBUTOR

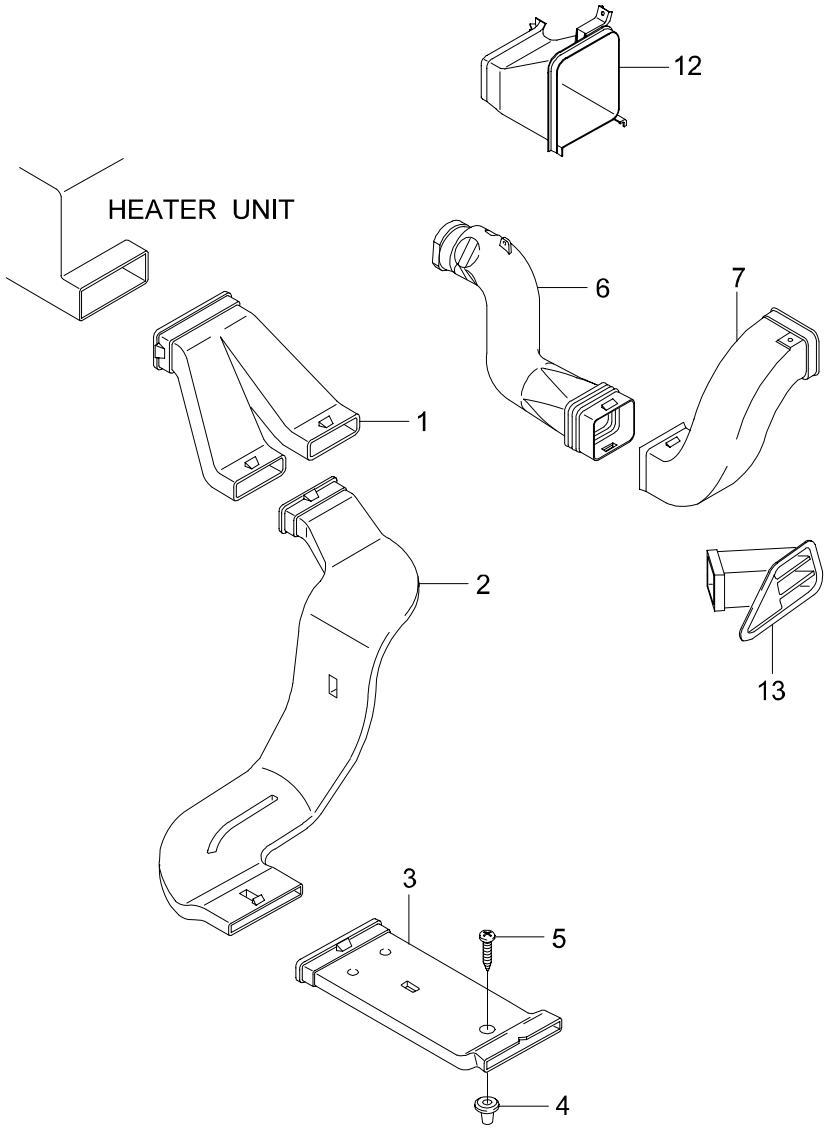

6830 - 01

6830 AIR DISTRIBUTOR

ITC	KEY NO. PART NO	PART NAME OPTION	L/R	T/M	DRV	MODEL 662LA	EFF. DATE FROM	EFF. DATE TO	REMARK
	[01]	*DUCT-RR HEATING JOINT*							
	6932105050X					1	02'1201	04'1229	
Y	6932105050					1	04'1230	06'0228	
	[02]	*DUCT-RR HEATING*							
	6932205053X		LH			1	02'1201	04'1229	
Y	6932205050		LH			1	04'1230	06'0228	
	6932305053X		RH			1	02'1201	04'1229	
Y	6932305050		RH			1	04'1230	06'0228	
	[03]	*DUCT ASSY-RR HEATING RR*							
	6932405051X					2	02'1201	04'1229	
Y	6932405050					1	04'1230	06'0228	
	[04]	*GROMMET*							
	8251205000					1	02'1201	06'0228	
	[05]	*SCREW*							
	937046016D					1	02'1201	06'0228	
	[06]	*HOSE-SIDE AIR VENTLATION NO1*							
	6934105000		LH			1	02'1201	06'0228	
	[07]	*DUCT ASSY-SIDE AIR VENT*							
	6934605400		LH			1	02'1201	06'0228	
	[12]	*DUCT ASSY-HEATER TO BLOWER*							
	6931005001					1	02'1201	06'0228	
	[13]	*COVER ASSY-SIDE DEFROSTER NOZZLE*							
	6953005401AAT		LH			1	02'1201	06'0228	
	6953505401AAT		RH			1	02'1201	06'0228	

6840 EVAPORATOR

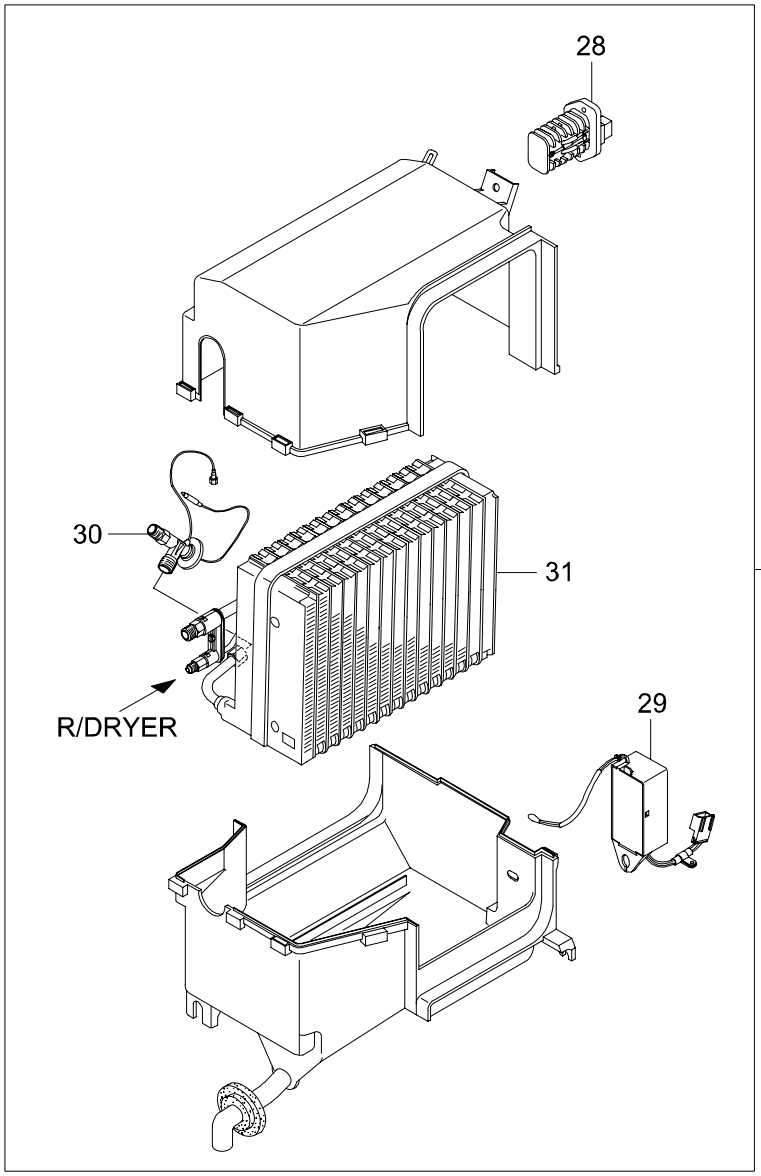

6840 EVAPORATOR

ITC	KEY NO. PART NO	PART NAME OPTION	L/R	T/M	DRV	MODEL 662LA									EFF. DATE FROM	EFF. DATE TO	REMARK
	[03]	*EVAPORATOR ASSY*															
	6831005052	MANUAL,SEMI AUTO				1									02'1201	06'0228	HANLLA
	6831005004	MANUAL,SEMI AUTO				1									02'1201	03'1016	DEAHANCALSONIC
O	6831005005	MANUAL,SEMI AUTO				1									03'1017	06'0228	DEAHANCALSONIC
	[28]	*RESISTOR ASSY*															
	6831305001					1									02'1201	06'0228	DEAHANCALSONIC
	6831305050					1									02'1201	06'0228	HANLLA
	[29]	*AMP ASSY-THERMO*															
	6831405000	PIN 3EA				1									02'1201	06'0228	DEAHANCALSONIC
	6831405050	PIN 3EA				1									02'1201	06'0228	HANLLA
	[30]	*VALVE ASSY-EXPENSION*															
	6831105001					1									02'1201	06'0228	DEAHANCALSONIC
	6831105050					1									02'1201	06'0228	HANLLA
	[31]	*CORE ASSY-EVAPORATOR*															
	6831205000					1									02'1201	06'0228	DEAHANCALSONIC
	6831205050					1									02'1201	06'0228	HANLLA

6850 CONDENSER

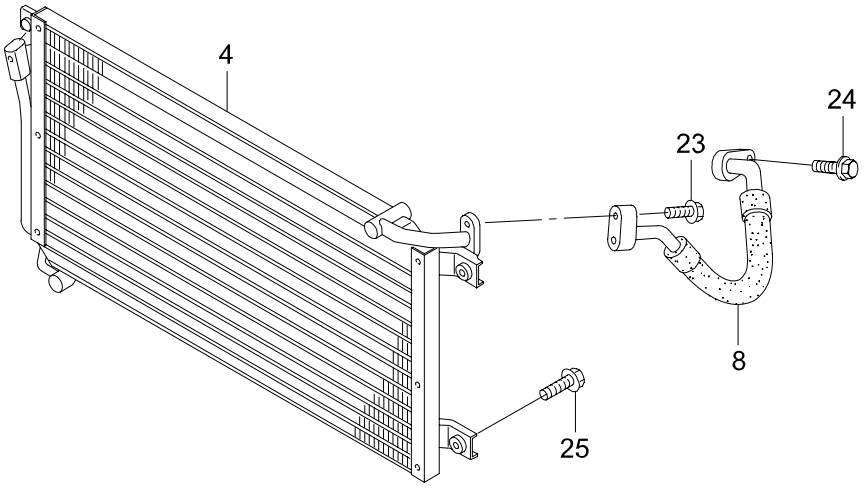

6850 CONDENSER

ITC	KEY NO. PART NO	PART NAME OPTION	L/R	T/M	DRV	MODEL 662LA									EFF. DATE FROM	EFF. DATE TO	REMARK
	[04]	*CONDENSER ASSY*															
	6841005040					1									02'1201	06'0228	DEAHANCALSONIC
	6841005060					1									02'1201	06'0228	HANLLA
	[08]	*HOSE-DISCHARGE*															
	6861005211					1									02'1201	06'0228	PAKAR
	[23]	*BOLT*															
	916040830D					1									02'1201	06'0228	
	[24]	*BOLT*															
	958040825D					1									02'1201	06'0228	
	[25]	*BOLT*															
	958140625D					1									02'1201	06'0228	

7010 KEY SET

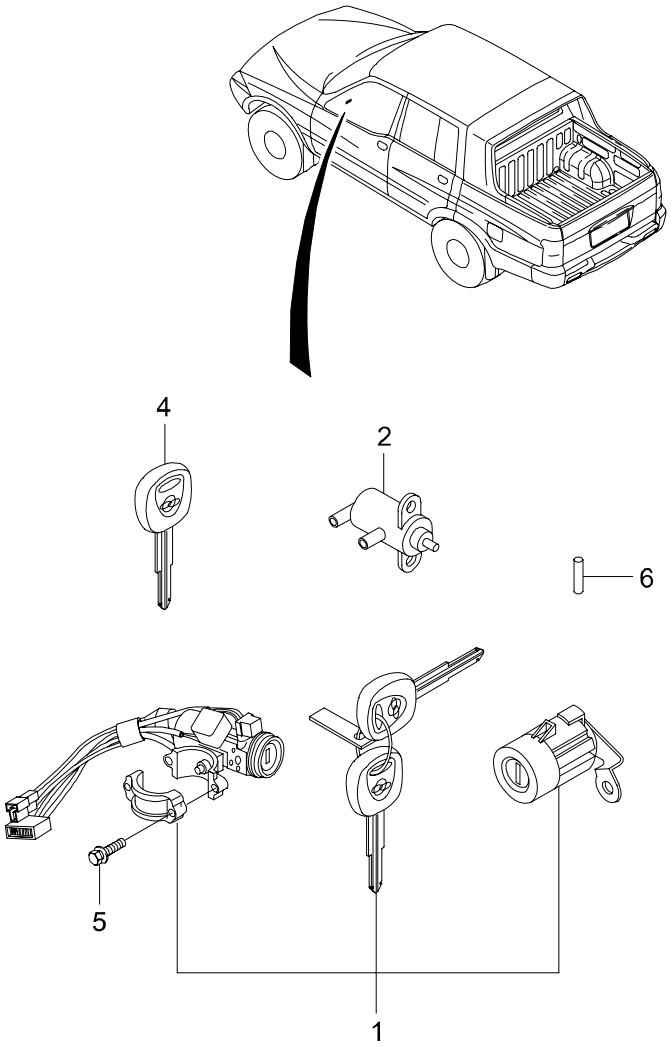

7010 KEY SET

ITC	KEY NO. PART NO	PART NAME OPTION	L/R	T/M	DRV	MODEL 662LA									EFF. DATE FROM	EFF. DATE TO	REMARK
	[01]	*KEY SET*															
	7100007000					1									02'1201	03'0831	
Y	7100007002					1									03'0901	04'1231	
Y	7100007003	DSL,-IMMO				1									05'0101	06'0228	USED PB FREE BULB
	7100007020	DSL,+IMMO				1									03'0901	06'0228	SYMC LOGO
	[02]	*VALVE-VACUUM*															
	0004600284					1									02'1201	06'0228	
	[04]	*KEY-BLANKING*															
	0000000319					1									02'1201	06'0228	SYMC LOGO
	71001051A0	IMMO				1									03'1216	06'0228	SYMC LOGO
	[05]	*BOLT*															
	7104305000					2									02'1201	06'0228	CUTTING BOLT
	[06]	*TRANSPONDER-IMMOBILIZER*															
	8696011000	IMMO				1									03'1216	06'0228	

7090 FUEL FILLER DOOR LOCK

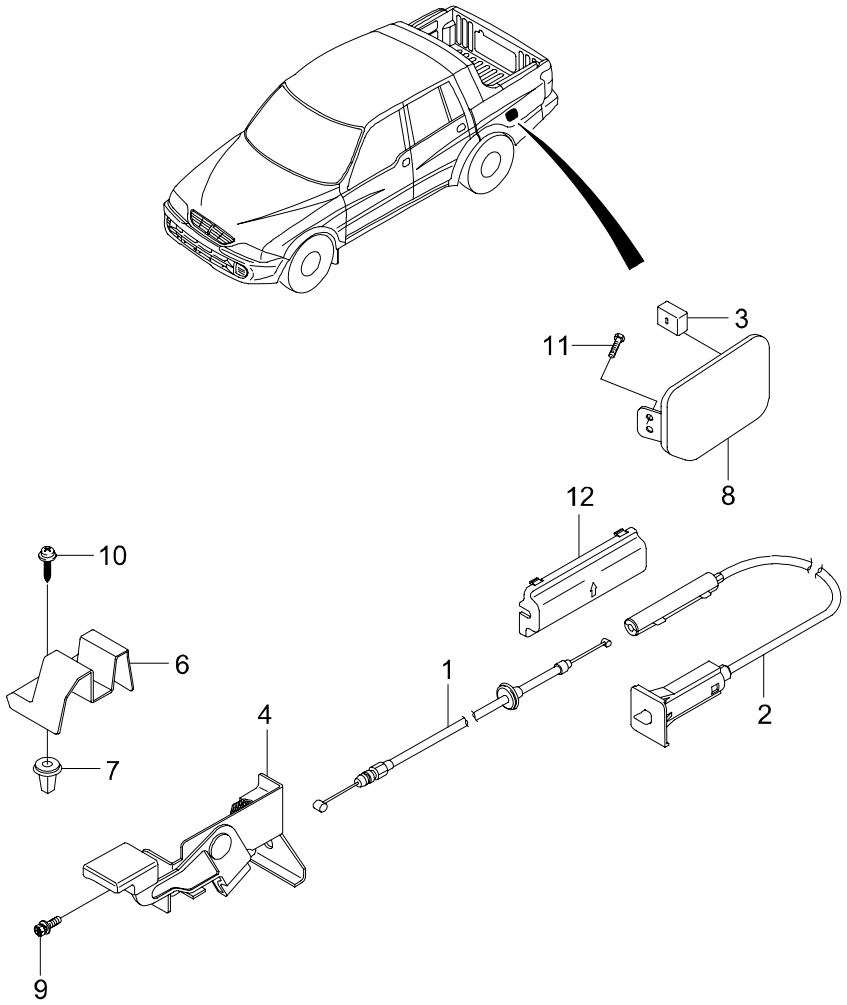

7090 FUEL FILLER DOOR LOCK

ITC	KEY NO. PART NO	PART NAME OPTION	L/R	T/M	DRV	MODEL 662LA	EFF. DATE FROM	EFF. DATE TO	REMARK
	[01]	*CABLE ASSY-FUEL FILLER DR RELEASE FRT*							
	7161007100					1	02'1201	06'0228	
	[02]	*CABLE ASSY-FUEL FILLER DR RELEASE RR*							
	7161007010					1	02'1201	06'0228	
	7161007900	RHD	RH		R	1	03'0902	06'0228	
	[03]	*BUMPER-FUEL FILLER DR OVERSLAM*							
	7162011000					2	02'1201	06'0228	
	[04]	*HANDLE ASSY-FUEL FILLER DR RELEASE*							
	7164005001					1	02'1201	06'0228	
	[06]	*COVER-FUEL FILLER DR REL HANDLE*							
	7166005000AAR					1	02'1201	06'0228	
	[07]	*GROMMET*							
	8251205000					1	02'1201	06'0228	
	[08]	*PNL & HINGE ASSY-FUEL FILLER DR*							
	6361007001					1	02'1201	04'0330	
Y	6361007002					1	04'0331	06'0228	
	[09]	*SCREW*							
	982740620D					1	02'1201	06'0228	M6X1.0X20
	[10]	*SCREW*							
	937046020D					1	02'1201	06'0228	
	[11]	*BOLT*							
	916040614D					2	02'1201	06'0228	
	[12]	*COVER-FUEL FILLER DR RELEASE CABLE*							
	7162107000					1	03'1117	06'0228	

7110 FRONT DOOR OPENING SYSTEM

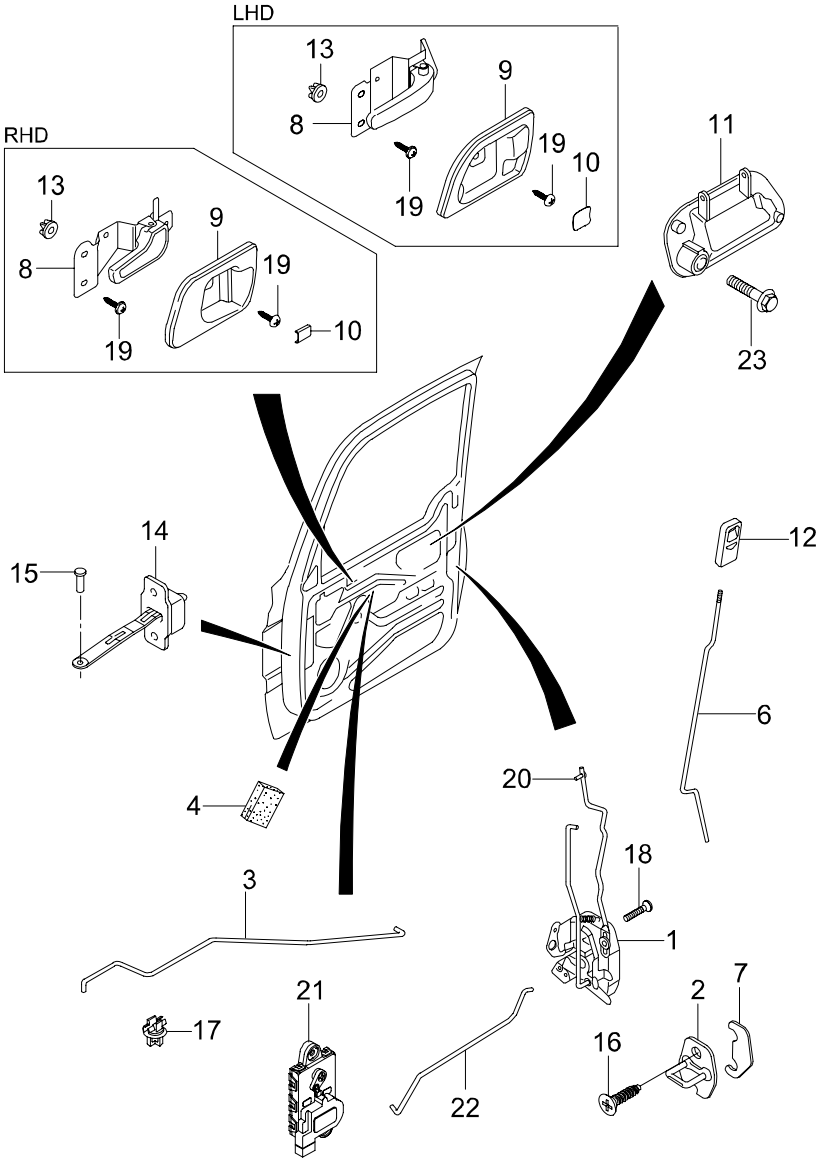

7110 FRONT DOOR OPENING SYSTEM

ITC	KEY NO. PART NO	PART NAME OPTION	L/R	T/M	DRV	MODEL 662LA									EFF. DATE FROM	EFF. DATE TO	REMARK
	[01]	*LATCH ASSY-FRT DR*															
	7120105003		LH			1									02'1201	03'0209	
Y	7120105004		LH			1									03'0210	06'0228	DR O/S ROD LENGTH(+3MM)
	7120205003		RH			1									02'1201	03'0209	
Y	7120205004		RH			1									03'0210	06'0228	DR O/S ROD LENGTH(+3mm)
	[02]	*STRIKER ASSY-DR*															
	7125005000					1									02'1201	06'0228	
	[03]	*ROD-FRT DR I/S HANDLE*															
	7127105010		LH			1									02'1201	06'0228	
	7127205010		RH			1									02'1201	06'0228	
	[04]	*PAD-DR I/S HANDLE ROD*															
	7127805000					1									02'1201	06'0228	
	[06]	*ROD-FRT DR SAFETY LOCK*															
	7129505002		LH			1									02'1201	06'0228	
	7129605002		RH			1									02'1201	06'0228	
	[07]	*SHIM*															
	7229603000					1									02'1201	06'0228	
	[08]	*HANDLE ASSY-DR I/S*															
	7241005003AAR		LH		R	1									02'1201	06'0228	
	7241005010SAD		LH			1									02'1201	06'0228	
	7242005003AAR		RH		R	1									02'1201	06'0228	
	7242005010SAD		RH			1									02'1201	06'0228	
	[09]	*BEZEL-DR I/S HANDLE*															
	7241105101AAR		LH		R	1									02'1201	06'0228	
	7243005010LAD		LH			1									02'1201	06'0228	
	7242105101AAR		RH		R	1									02'1201	06'0228	
	7244005010LAD		RH			1									02'1201	06'0228	
	[10]	*CAP-DR I/S HANDLE BEZEL MTG*															
	7242405000AAR				R	1									02'1201	06'0228	
	7242405010LAD		LH			1									02'1201	06'0228	
	7243405010LAD		RH			1									02'1201	06'0228	
	[11]	*HANDLE ASSY-FRT DR O/S*															
	7245005001	BLACK	LH			1									02'1201	03'0703	
N	7245005010	BLACK	LH			1									03'0704	06'0228	

7110 FRONT DOOR OPENING SYSTEM

ITC	KEY NO. PART NO	PART NAME OPTION	L/R	T/M	DRV	MODEL 662LA									EFF. DATE FROM	EFF. DATE TO	REMARK
	[11]	*HANDLE ASSY-FRT DR O/S*															
	7246005001	BLACK	RH			1									02'1201	03'0703	
N	7246005010	BLACK	RH			1									03'0704	06'0228	
	7245005102	CHROME	LH			1									02'1201	03'0703	
N	7245005110		LH			1									03'0704	06'0228	
	7246005102	CHROME	RH			1									02'1201	03'0703	
N	7246005110		RH			1									03'0704	06'0228	
	[12]	*KNOB-DR SAFETY LOCK*															
	7247005000LAD					1									02'1201	06'0228	
	[13]	*GROMMET-DR I/S HANDLE MTG*															
	7247205000					1									02'1201	06'0228	
	[14]	*CHECKER ASSY-FRT DR*															
	7288005010					1									02'1201	06'0228	
	[15]	*PIN-DR CHECKER MTG*															
	7129705001					2									02'1201	06'0228	
	[16]	*SCREW*															
	9368580301					1									02'1201	06'0228	
	[17]	*HOLDER ASSY*															
	9900308100					4									02'1201	06'0228	M8X1.25X30
	[18]	*SCREW*															
	7120905001					6									02'1201	06'0228	
	[19]	*SCREW*															
	938046016D					1									02'1201	06'0228	M6X16
	[20]	*PIN-DR O/S HANDLE ROD*															
	7138705000					1									02'1201	06'0228	
	[21]	*ACTUATOR ASSY-FRT DR LOCK*															
	8835005051					1									02'1201	06'0228	WITH ROD [22]
	8835005061					1									02'1201	06'0228	WITH ROD [22]
	[22]	*ROD-FRT DR ACTUATOR*															
	7128705031		LH			1									02'1201	06'0228	
	7128805041		RH			1									02'1201	06'0228	
	[23]	*BOLT*															
	9162706081					4									02'1201	06'0228	M6X1.0

7115 FRONT DOOR TRIM

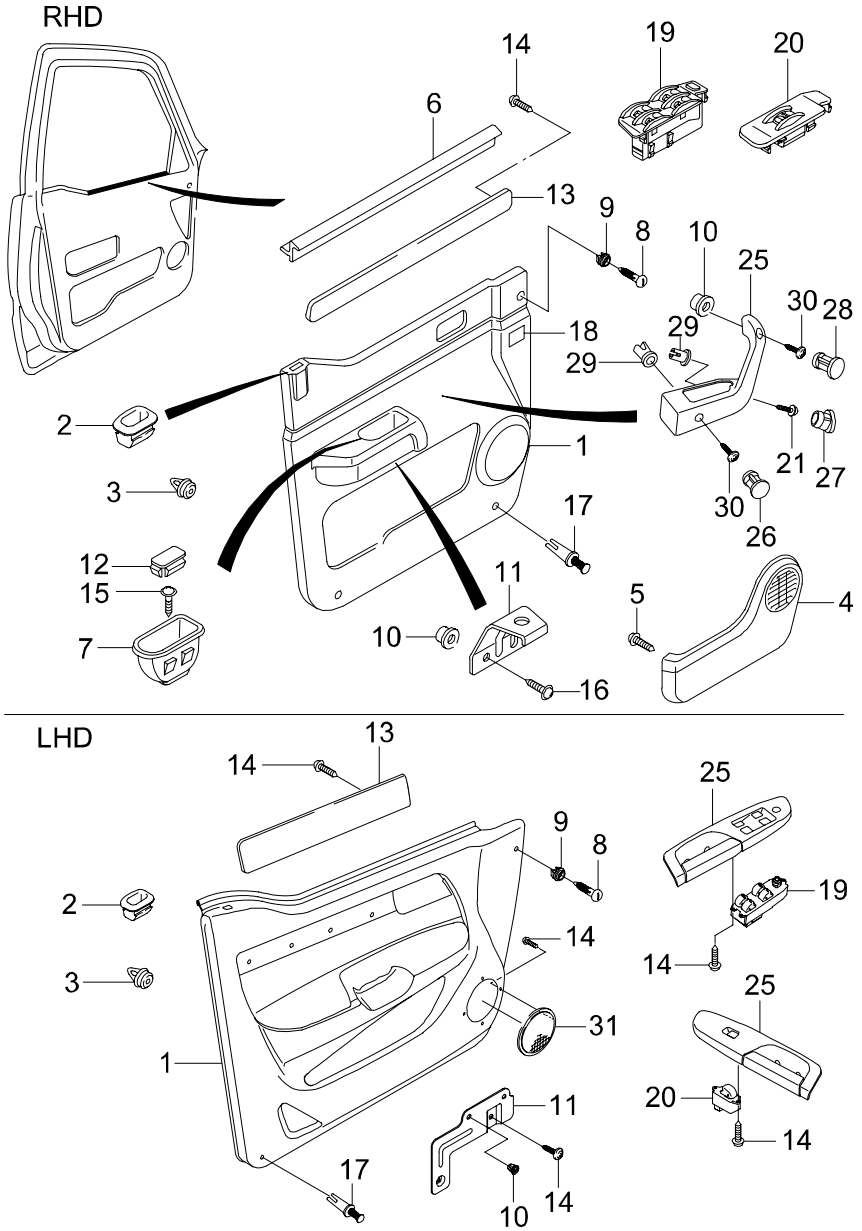

7115 FRONT DOOR TRIM

ITC	KEY NO. PART NO	PART NAME OPTION	L/R	T/M	DRV	MODEL 662LA									EFF. DATE FROM	EFF. DATE TO	REMARK
	[01]	*PNL ASSY-FRT DR TRIM*															
	7220105027CBC		LH		R	1									02'1201	06'0228	WOVEN
	7220105038UAH	W/GRAIN	LH		R	1									02'1201	06'0228	PVC
	7220105082UAH	W/GRAIN	LH		R	1									02'1201	06'0228	WOVEN
	7220105900CBC	F/WOVEN	LH		L	1									02'1201	06'0228	
	7220105950AAR	PU LEATHER,-W/GRAIN	LH		L	1									02'1201	06'0228	
	7220105980UAH	PU LEATHER,+W/GRAIN	LH			1									02'1201	03'0302	A/S ONLY PART NO.(W/O P/SWITCH&C/LAMP)
N	7220105980UAR	2003M/Y W/GRAIN,PU LEATHER	LH			1									03'0303	06'0228	A/S ONLY PART NO.(W/O P/SWITCH&C/LAMP)
	7220205027CBC		RH		R	1									02'1201	06'0228	
	7220205038UAH	W/GRAIN	RH		R	1									02'1201	06'0228	PVC
	7220205082UAH	W/GRAIN	RH		R	1									02'1201	06'0228	WOVEN
	7220205900CBC		RH		L	1									02'1201	06'0228	
	7220205950AAR	PU LEATHER,-W/GRAIN	RH		L	1									02'1201	06'0228	
	7220205980UAH	PU LEATHER,+W/GRAIN	RH			1									02'1201	03'0302	A/S ONLY PART NO.(W/O P/SWITCH&C/LAMP)
N	7220205980UAR	2003M/Y,W/GRAIN,PU LEATHER	RH			1									03'0303	06'0228	A/S ONLY PART NO.(W/O P/SWITCH&C/LAMP)
	[02]	*GROMMET-FRT DR SAFETY LOCK ROD*															
	7127305000					1									02'1201	06'0228	
	7127305001AAR					1									02'0901	06'0228	
	[03]	*FASTENER-DR TRIM*															
	7221505020					1									02'1201	06'0228	
	[04]	*POCKET-MAP*															
	7227005000AAR		LH		R	1									02'1201	06'0228	
	7228005000AAR		RH		R	1									02'1201	06'0228	
	[05]	*SCREW*															
	7227105000					1									02'1201	06'0228	
	[06]	*W/STRIP-FRT DR BELT I/S*															
	7255105002		LH		R	1									02'1201	06'0228	
	7256105002		RH		R	1									02'1201	06'0228	
	[07]	*HANDLE ASSY-DR PULL*															
	7267105001AAR				R	1									02'1201	06'0228	
	[08]	*FASTENER-DR TRIM*															
	7227805001AAR					1									02'1201	06'0228	
	7227805001AAT				R	1									02'1201	06'0228	

7115 FRONT DOOR TRIM

ITC	KEY NO. PART NO	PART NAME OPTION	L/R	T/M	DRV	MODEL 662LA	EFF. DATE FROM	EFF. DATE TO	REMARK
	[09]	*GROMMET-DR TRIM MTG*							
	7227905000					1	02'1201	06'0228	
	[10]	*GROMMET-DR I/S HANDLE MTG*							
	7247205000					1	02'1201	06'0228	
	[11]	*SUPT-DR PULL HANDLE MTG*							
	7261005501		LH			1	02'1201	06'0228	
	7262005501		RH			1	02'1201	06'0228	
	7267305001				R	1	02'1201	06'0228	
	[12]	*CAP-DR I/S HANDLE BEZEL MTG*							
	7242405000AAR				R	2	02'1201	06'0228	
	[13]	*MOULDING-FRT DR TRIM*							
	7223605001UAH	W/GRAIN	LH		R	1	02'1201	06'0228	
	7223605500LAD		LH			1	02'1201	06'0228	
	7224605001UAH	W/GRAIN	RH		R	1	02'1201	06'0228	
	7224605500LAD		RH			1	02'1201	06'0228	
	[14]	*SCREW*							
	937044012D					1	02'1201	06'0228	M4X12
	[15]	*SCREW*							
	937044010D					1	02'1201	06'0228	
	[16]	*SCREW*							
	938046016D					1	02'1201	06'0228	
	[17]	*SCRIVET-DR TRIM MTG*							
	7229005000AAR					1	02'1201	06'0228	
	[18]	*LABEL-OPERATION*							
	0815205501					1	02'1201	06'0228	
	[19]	*SWITCH ASSY-P/WINDOW MAIN*							
	8582005700LAD		LH			1	02'1201	06'0228	
	8582005901				R	1	03'1214	06'0228	
	8582005911UAH				R	1	03'1214	06'0228	W/GRAIN
	[20]	*SWITCH ASSY-P/WINDOW SUB*							
	8583005700LAD				L	1	02'1201	06'0228	

7115 FRONT DOOR TRIM

ITC	KEY NO. PART NO	PART NAME OPTION	L/R	T/M	DRV	MODEL 662LA	EFF. DATE FROM	EFF. DATE TO	REMARK
	[20]	*SWITCH ASSY-P/WINDOW SUB*							
	8583005002		LH		R	1	03'1214	06'0228	
	8583005102UAH	W/GRAIN	LH		R	1	02'1201	06'0228	
	8583005502		RH		R	1	02'1201	06'0228	
	8583005512UAH	W/GRAIN	RH		R	1	02'1201	06'0228	
	[21]	*SCREW*							
	7266905100				R	1	02'1201	06'0228	
	[25]	*HANDLE ASSY-DR ARM REST GRIP*							
	7265105500AAR		LH			1	02'1201	06'0228	
	7265005102AAR		LH		R	1	02'1201	06'0228	
	7266105500AAR		RH			1	02'1201	06'0228	
	7266005102AAR		RH		R	1	02'1201	06'0228	
	[26]	*CAP-DR ARM REST GRIP HANDLE MTG*							
	7265405100AAR				R	1	02'1201	06'0228	
	[27]	*CAP-DR ARM REST GRIP HANDLE MTG*							
	7265505100AAR				R	1	02'1201	06'0228	
	[28]	*CAP-DR ARM REST GRIP HANDLE MTG*							
	7266605100AAR		RH		R	1	02'1201	06'0228	
	[29]	*RETAINER*							
	7265905100					2	02'1201	06'0228	
	[30]	*SCREW*							
	7266805100					4	02'1201	06'0228	
	[31]	*GRILL-FRT DR-SPEAKER*							
	7268005500		LH			1	02'1201	06'0228	
	7269005500		RH			1	02'1201	06'0228	

7120 FRONT WINDOW LIFTER

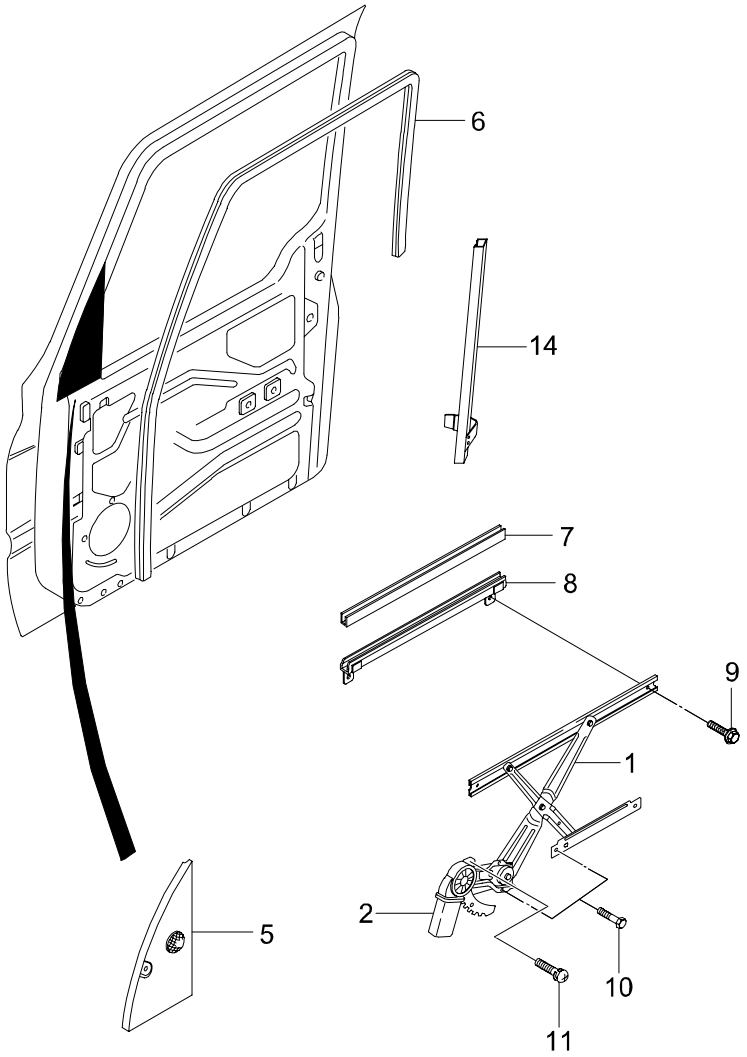

7120 FRONT WINDOW LIFTER

ITC	KEY NO. PART NO	PART NAME OPTION	L/R	T/M	DRV	MODEL 662LA	EFF. DATE FROM	EFF. DATE TO	REMARK
	[01]	*REGULATOR ASSY-FRT DR P/WINDOW*							
	7233005102		LH			1	02'1201	06'0228	W/OUT MOTOR
	7234005102		RH			1	02'1201	06'0228	W/OUT MOTOR
	[02]	*MOTOR ASSY-P/WINDOW*							
	8810005002		LH			1	02'1201	06'0228	
	8810005102		RH			1	02'1201	06'0228	
	[05]	*COVER-INR*							
	7893005013		LH			1	02'1201	06'0228	ELECTICAL,HEATER
	7894005013		RH			1	02'1201	06'0228	ELECTICAL,HEATER
	[06]	*GLASS RUN-FRT DR WINDOW*							
	7283105011		LH			1	02'1201	06'0228	
	7284105011		RH			1	02'1201	06'0228	
	[07]	*STRIP-DR GLASS GRIP SEAL*							
	7231405000					1	02'1201	06'0228	
	[08]	*GRIP ASSY-FRT DR GLASS*							
	7231205001					1	02'1201	03'0328	
Y	7231205002					1	03'0329	06'0228	
	[09]	*SCREW*							
	9820706121					1	02'1201	06'0228	M6X1.0X12
	[10]	*BOLT*							
	916270610D					1	02'1201	06'0228	
	[11]	*SCREW*							
	980540610D					3	02'1201	06'0228	
	[14]	*CHANNEL ASSY-FRT DR QUADRANT*							
	6233005002		LH			1	02'1201	06'0228	
	6234005002		RH			1	02'1201	06'0228	

7121 FRONT WEATHER STRIP

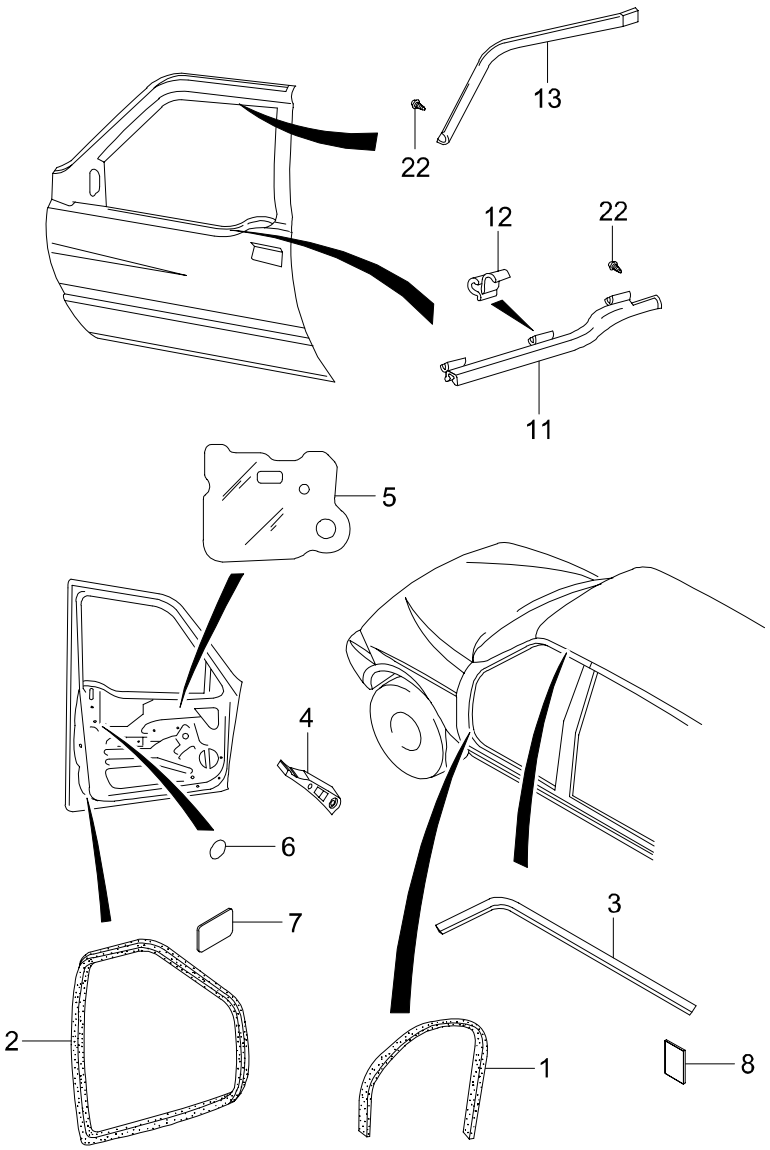

7121 FRONT WEATHER STRIP

ITC	KEY NO. PART NO	PART NAME OPTION	L/R	T/M	DRV	MODEL 662LA									EFF. DATE FROM	EFF. DATE TO	REMARK
	[01]	*W/STRIP-FRT DR SIDE BODY*															
	7211005004AAR		LH			1									02'1201	06'0228	
	7212005004AAR		RH			1									02'1201	06'0228	
	[02]	*W/STRIP-FRT DR OPENG*															
	7213005003		LH			1									02'1201	06'0228	
	7214005003		RH			1									02'1201	06'0228	
	[03]	*W/STRIP-DR DRIP*															
	7215005000		LH			1									02'1201	06'0228	
	7216005000		RH			1									02'1201	06'0228	
	[04]	*DAM ASSY-FRT DR QUADRANT*															
	7215405000		LH			1									02'1201	06'0228	
	7216405000		RH			1									02'1201	06'0228	
	[05]	*SEAL-FRT DR TRIM*															
	7229105102					2									02'1201	06'0228	
	[06]	*TAPE-DR TOOLING HOLE SEALING*															
	7219105000					1									02'1201	06'0228	
	[07]	*TAPE-FRT DR SWITCH PROTECTION*															
	7219205000					1									02'1201	06'0228	
	[08]	*TAPE-DR TRIM SEAL*															
	7229205000					1									02'1201	06'0228	
	[11]	*W/STRIP-FRT DR BELT O/S*															
	7251005003		LH			1									02'1201	06'0228	
	7252005003		RH			1									02'1201	06'0228	
	[12]	*CLIP*															
	7251205001					2									02'1201	06'0228	
	[13]	*MOULDING-FRT DR FRAME*															
	7253005011		LH			1									02'1201	06'0228	
	7254005011		RH			1									02'1201	06'0228	
	[22]	*SCREW*															
	938144008B					4									02'1201	06'0228	

7210 REAR DOOR OPENING SYSTEM

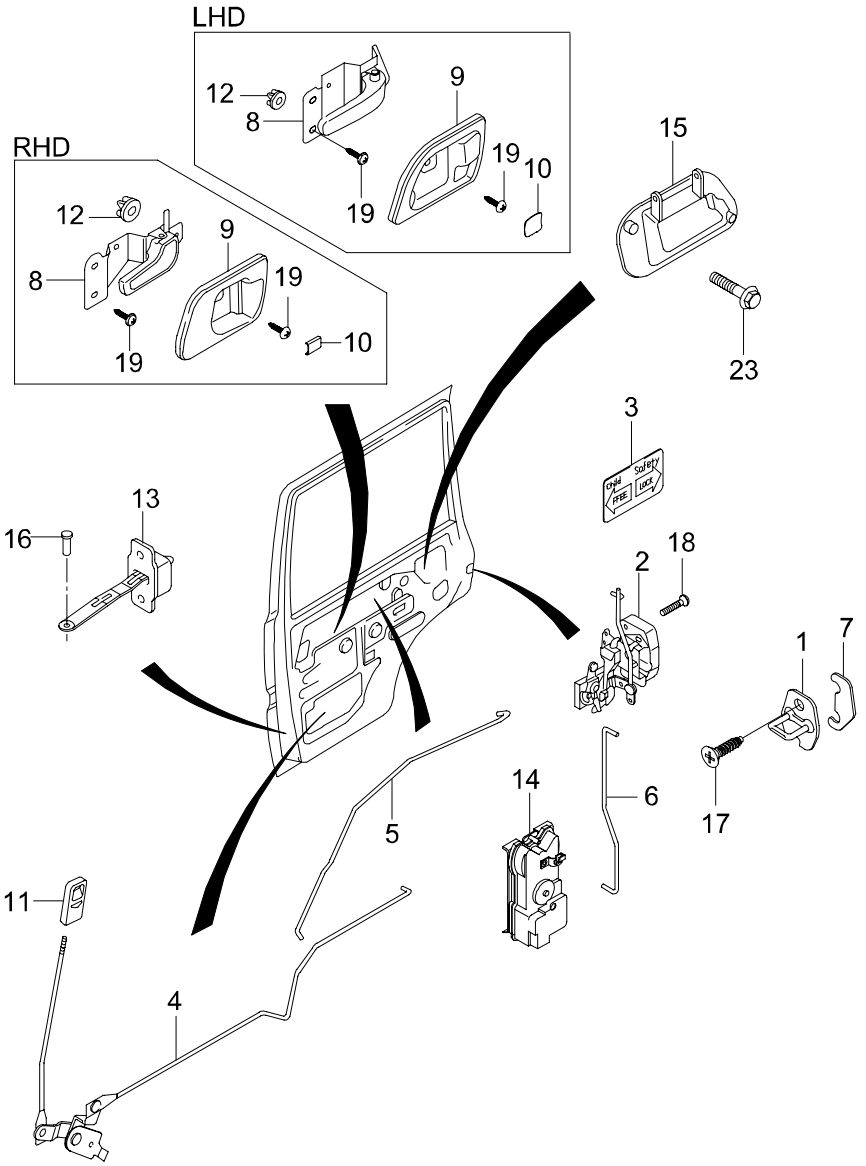

7210 REAR DOOR OPENING SYSTEM

ITC	KEY NO. PART NO	PART NAME OPTION	L/R	T/M	DRV	MODEL 662LA	EFF. DATE FROM	EFF. DATE TO	REMARK
	[01]	*STRIKER ASSY-DR*							
	7125005000					2	02'1201	06'0228	
	[02]	*LATCH & ROD ASSY-RR DR*							
	7130105001		LH			1	02'1201	03'0209	
N	7130105002		LH			1	03'0210	06'0228	DR O/S ROD LENGTH(+6MM)
	7130205001		RH			1	02'1201	03'0209	
Y	7130205002		RH			1	03'0210	06'0228	DR O/S ROD LENGTH(+6mm)
	[03]	*LABEL-DR CHILD SAFETY*							
	7135205000		LH			1	02'1201	06'0228	
	7136205001		RH			1	02'0901	06'0228	
	[04]	*ROD & BELL CRANK-RR DR*							
	7137005002		LH			1	02'1201	06'0228	
	7138005002		RH			1	02'1201	06'0228	
	[05]	*ROD-RR DR I/S HANDLE*							
	7137105010		LH			1	02'1201	06'0228	
	7137205010		RH			1	02'1201	06'0228	
	[06]	*ROD-RR DR ACTUATOR*							
	7139905020					2	02'1201	06'0228	
	[07]	*SHIM*							
	7229603000					1	02'1201	06'0228	
	[08]	*HANDLE ASSY-DR I/S*							
	7241005003AAR		LH		R	1	02'1201	06'0228	
	7241005010SAD		LH			1	02'1201	06'0228	
	7242005003AAR		RH		R	1	02'1201	06'0228	
	7242005010SAD		RH			1	02'1201	06'0228	
	[09]	*BEZEL-DR I/S HANDLE*							
	7241105101AAR		LH		R	1	02'1201	06'0228	
	7243005010LAD		LH			1	02'1201	06'0228	
	7242105101AAR		RH		R	1	02'1201	06'0228	
	7244005010LAD		RH			1	02'1201	06'0228	
	[10]	*CAP-DR I/S HANDLE BEZEL MTG*							
	7242405000AAR				R	1	02'1201	06'0228	
	7242405010LAD		LH			1	02'1201	06'0228	
	7243405010LAD		RH			1	02'1201	06'0228	

7210 REAR DOOR OPENING SYSTEM

ITC	KEY NO. / PART NO	PART NAME / OPTION	L/R	T/M	DRV	MODEL 662LA	EFF. DATE FROM	EFF. DATE TO	REMARK
	[11]	*KNOB-DR SAFETY LOCK*							
	7247005000LAD					1	02'1201	06'0228	
	[12]	*GROMMET-DR I/S HANDLE MTG*							
	7247205000					1	02'1201	06'0228	
	[13]	*CHECKER ASSY-RR DR*							
	7298005010					1	02'1201	06'0228	
	[14]	*ACTUATOR ASSY-RR DR LOCK*							
	8836005050		LH			1	02'1201	06'0228	
	8836005060		RH			1	02'1201	06'0228	
	[15]	*HANDLE ASSY-RR DR O/S*							
	7345005002		LH			1	02'1201	03'0703	BLACK
N	7345005010		LH			1	03'0704	06'0228	BLACK
	7346005002		RH			1	02'1201	03'0703	BLACK
N	7346005010		RH			1	03'0704	06'0228	BLACK
	7345005103		LH			1	02'1201	03'0703	CHROME COATING
N	7345005110		LH			1	03'0704	06'0228	BRIGHT
	7346005103		RH			1	02'1201	03'0703	CHROME COATING
N	7346005110		RH			1	03'0704	06'0228	BRIGHT
	[16]	*PIN-DR CHECKER MTG*							
	7129705001					1	02'1201	06'0228	
	[17]	*SCREW*							
	9368580301					1	02'1201	06'0228	
	[18]	*SCREW*							
	7120905001					6	02'1201	06'0228	
	[19]	*SCREW*							
	938046016D					1	02'1201	06'0228	M6X16
	[23]	*BOLT*							
	9162706081					4	02'1201	06'0228	M6X1.0

7215 REAR DOOR TRIM

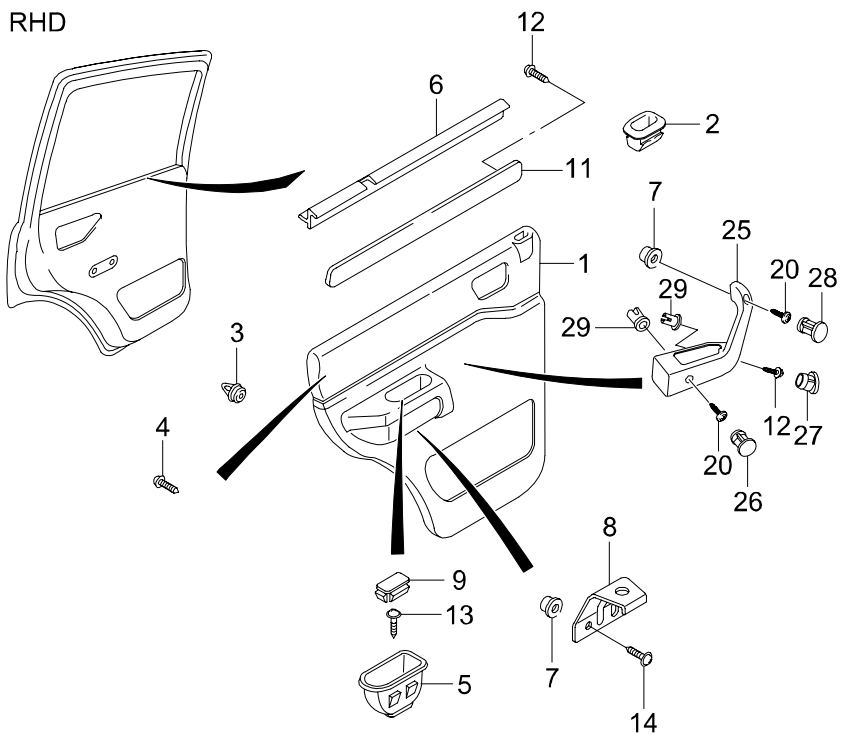

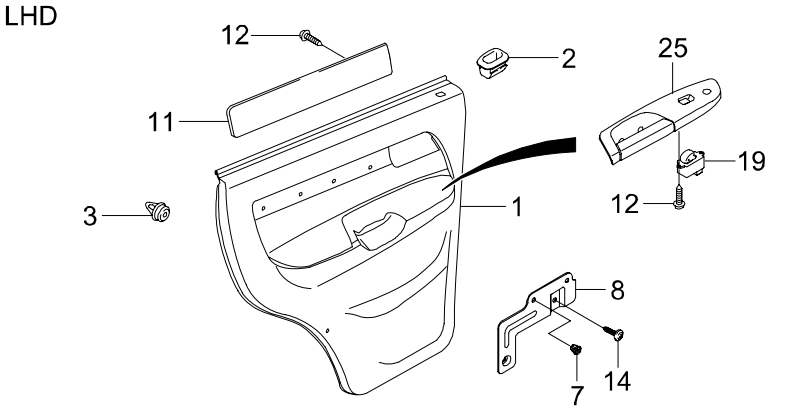

7215 REAR DOOR TRIM

ITC	KEY NO. PART NO	PART NAME OPTION	L/R	T/M	DRV	MODEL 662LA	EFF. DATE FROM	EFF. DATE TO	REMARK
	[01]	*PNL ASSY-RR DR TRIM*							
	7320105026CBC		LH		R	1	02'1201	06'0228	WOVEN
	7320105037UAH	W/GRAIN	LH		R	1	02'1201	06'0228	PVC
N	7320105082UAH	W/GRAIN	LH		R	1	02'1201	06'0228	WOVEN
	7320105900CBC		LH		L	1	02'1201	06'0228	
	7320105950AAR	PU LEATHER,-W/GRAIN	LH		L	1	02'1201	06'0228	
	7320105980UAH	PU LEATHER,+W/GRAIN	LH			1	02'1201	03'0302	A/S ONLY PART NO.(W/O P/SWITCH&C/LAMP)
N	7320105980UAR	2003M/Y W/GRAIN,LEATHER,PVC	LH			1	03'0303	06'0228	A/S ONLY PART NO.(W/O P/SWITCH&C/LAMP)
	7320205026CBC		RH		R	1	02'1201	06'0228	WOVEN
	7320205037UAH	W/GRAIN	RH		R	1	02'1201	06'0228	PVC
N	7320205082UAH	W/GRAIN	RH		R	1	02'1201	06'0228	WOVEN
	7320205900CBC		RH		L	1	02'1201	06'0228	
	7320205950AAR	PU LEATHER,-W/GRAIN	RH		L	1	02'1201	06'0228	
	7320205980UAH	PU LEATHER,+W/GRAIN	RH			1	02'1201	03'0302	A/S ONLY PART NO.(W/O P/SWITCH&C/LAMP)
N	7320205980UAR	2003M/Y W/GRAIN,PVC,LEATHER	RH			1	03'0303	06'0228	A/S ONLY PART NO.(W/O P/SWITCH&C/LAMP)
	[02]	*GROMMET-RR DR SAFETY LOCK ROD*							
	7137305000					1	02'1201	06'0228	
	7137305001AAR					1	02'0901	06'0228	
	[03]	*FASTENER-DR TRIM*							
	7221505020					1	02'1201	06'0228	
	[04]	*SCREW*							
	7227105000					1	02'1201	06'0228	
	[05]	*HANDLE ASSY-DR PULL*							
	7267105001AAR				R	1	02'1201	06'0228	
	[06]	*W/STRIP-RR DR BELT I/S*							
	7355105001		LH		R	1	02'1201	06'0228	
	7356105001		RH		R	1	02'1201	06'0228	
	[07]	*GROMMET-DR I/S HANDLE MTG*							
	7247205000					1	02'1201	06'0228	
	[08]	*SUPT*							
	7361005500		LH			1	02'1201	06'0228	
	7362005500		RH			1	02'1201	06'0228	
	7267305001				R	1	02'1201	06'0228	

7215 REAR DOOR TRIM

ITC	KEY NO. / PART NO	PART NAME / OPTION	L/R	T/M	DRV	MODEL 662LA	EFF. DATE FROM	EFF. DATE TO	REMARK
	[09]	*CAP-DR I/S HANDLE BEZEL MTG*							
	7242405000AAR				R	2	02'1201	06'0228	
	[11]	*MOULDING-RR DR TRIM*							
	7323605001UAH	W/GRAIN	LH		R	1	02'1201	06'0228	
	7223605500LAD		LH			1	02'1201	06'0228	
	7324605001UAH	W/GRAIN	RH		R	1	02'1201	06'0228	
	7224605500LAD		RH			1	02'1201	06'0228	
	[12]	*SCREW*							
	937044012D					1	02'1201	06'0228	M4X12
	[13]	*SCREW*							
	938144008D				R	2	02'1201	06'0228	
	[14]	*SCREW*							
	938046016D					1	02'1201	06'0228	M6X16
	[19]	*SWITCH ASSY-P/WINDOW SUB*							
	8583005700LAD				L	1	02'1201	06'0228	
	[20]	*SCREW*							
	7266805100					4	02'1201	06'0228	
	[25]	*HANDLE ASSY-DR ARM REST GRIP*							
	7265005102AAR		LH		R	1	02'1201	06'0228	
	7365105500AAR		LH			1	02'1201	06'0228	
	7266005102AAR		RH		R	1	02'1201	06'0228	
	7366105500AAR		RH			1	02'1201	06'0228	
	[26]	*CAP-DR ARM REST GRIP HANDLE MTG*							
	7265405100AAR				R	1	02'1201	06'0228	
	[27]	*CAP-DR ARM REST GRIP HANDLE MTG*							
	7265505100AAR				R	1	02'1201	06'0228	
	[28]	*CAP-DR ARM REST GRIP HANDLE MTG*							
	7266605100AAR		RH		R	1	02'1201	06'0228	
	[29]	*RETAINER*							
	7265905100					2	02'1201	06'0228	

7220 REAR WINDOW LIFTER

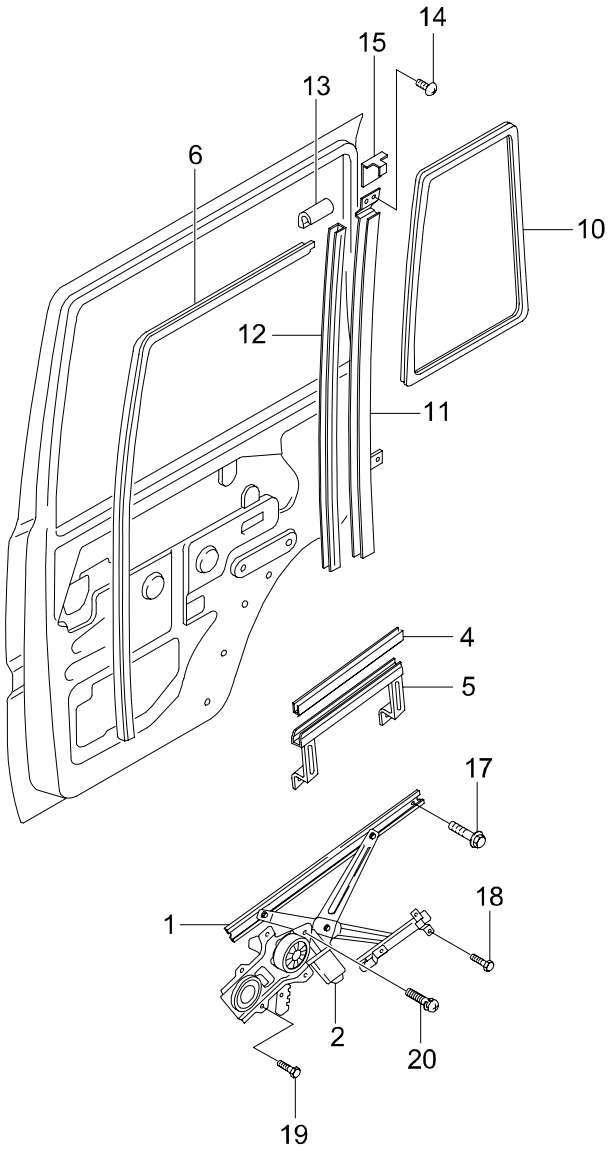

7220 REAR WINDOW LIFTER

ITC	KEY NO. PART NO	PART NAME OPTION	L/R	T/M	DRV	MODEL 662LA	EFF. DATE FROM	EFF. DATE TO	REMARK
	[01]	*REGULATOR-RR DR P/WINDOW*							
	7333005102		LH			1	02'1201	06'0228	
	7334005102		RH			1	02'1201	06'0228	
	[02]	*MOTOR ASSY-P/WINDOW*							
	8810005002		LH			1	02'1201	06'0228	
	8810005102		RH			1	02'1201	06'0228	
	[04]	*STRIP-RR DR GLASS GRIP SEAL*							
	7331405000					1	02'1201	06'0228	
	[05]	*GRIP ASSY-RR DR GLASS*							
	7331205001					1	02'1201	03'0328	
Y	7331205002					1	03'0329	06'0228	
	[06]	*GLASS RUN-RR DR WINDOW*							
	7293105001		LH			1	02'1201	06'0228	
	7294105001		RH			1	02'1201	06'0228	
	[10]	*W/STRIP-RR DR FIXED GLASS*							
	7293305000		LH			1	02'1201	06'0228	
	7294305000		RH			1	02'1201	06'0228	
	[11]	*CHANNEL-RR DR DIVISION*							
	7291005002		LH			1	02'1201	06'0228	
	7292005002		RH			1	02'1201	06'0228	
	[12]	*GLASS RUN-RR DR DIV CHANNEL*							
	7293205000					2	02'1201	06'0228	
	[13]	*CAP-RR DR GLASS RUN I/S END*							
	7293505001					1	02'1201	06'0228	
	7294505001		RH			1	02'1201	06'0228	
	[14]	*SCREW*							
	7291405000					1	02'1201	06'0228	
	[15]	*CAP-RR DR DIV CHANEL END*							
	7295105000		LH			1	02'1201	06'0228	
	7296105000		RH			1	02'1201	06'0228	
	[17]	*SCREW*							
	9820706121					1	02'1201	06'0228	M6X1.0X12

7220 REAR WINDOW LIFTER

ITC	KEY NO. PART NO	PART NAME OPTION	L/R	T/M	DRV	MODEL 662LA									EFF. DATE FROM	EFF. DATE TO	REMARK
	[18] 982840616D	*SCREW*				1									02'1201	06'0228	
	[19] 916270610D	*BOLT*				1									02'1201	06'0228	
	[20] 980540610D	*SCREW*				3									02'1201	06'0228	

7221 REAR WEATHER STRIP

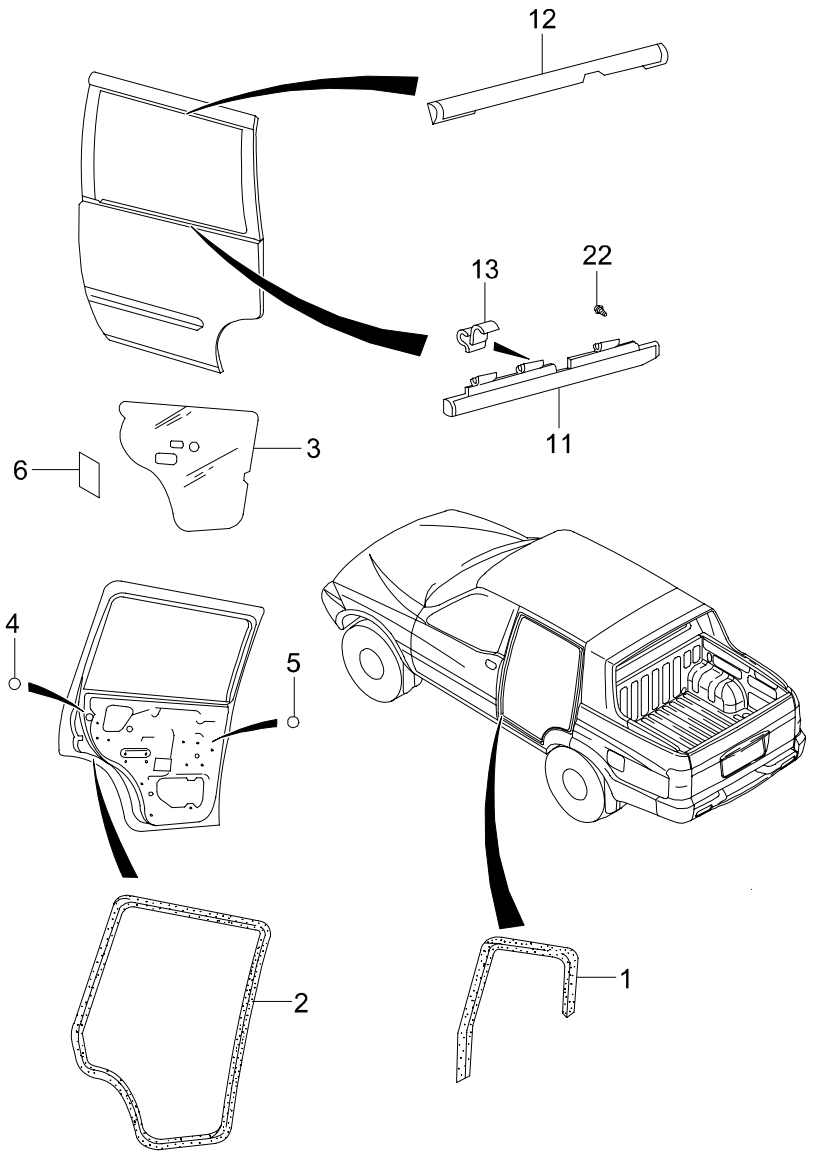

7221 REAR WEATHER STRIP

ITC	KEY NO. PART NO	PART NAME OPTION	L/R	T/M	DRV	MODEL 662LA									EFF. DATE FROM	EFF. DATE TO	REMARK
	[01]	*W/STRIP-RR DR BODY SIDE*															
	7311005002AAR		LH			1									02'1201	06'0228	
	7312005002AAR		RH			1									02'1201	06'0228	
	[02]	*W/STRIP-RR DR SIDE*															
	7313005003		LH			1									02'1201	06'0228	
	7314005003		RH			1									02'1201	06'0228	
	[03]	*SEAL-RR DR TRIM*															
	7329105103		LH			2									02'1201	06'0228	
	[04]	*TAPE-DR TOOLING HOLE SEALING*															
	7219105000					1									02'1201	06'0228	
	[05]	*TAPE-FRT DR SWITCH PROTECTION*															
	7219205000					1									02'1201	06'0228	
	[06]	*TAPE-DR TRIM SEAL*															
	7229205000					1									02'1201	06'0228	
	[11]	*W/STRIP-RR DR BELT O/S*															
	7351005001		LH			1									02'1201	06'0228	
	7352005001		RH			1									02'1201	06'0228	
	[12]	*MOULDING-RR DR FRAME*															
	7353005003		LH			1									02'0901	06'0228	
	7354005003		RH			1									02'0901	06'0228	
	[13]	*CLIP*															
	7251205001					2									02'1201	06'0228	
	[22]	*SCREW*															
	938144008B					1									02'1201	06'0228	

7330 HEAD LINING

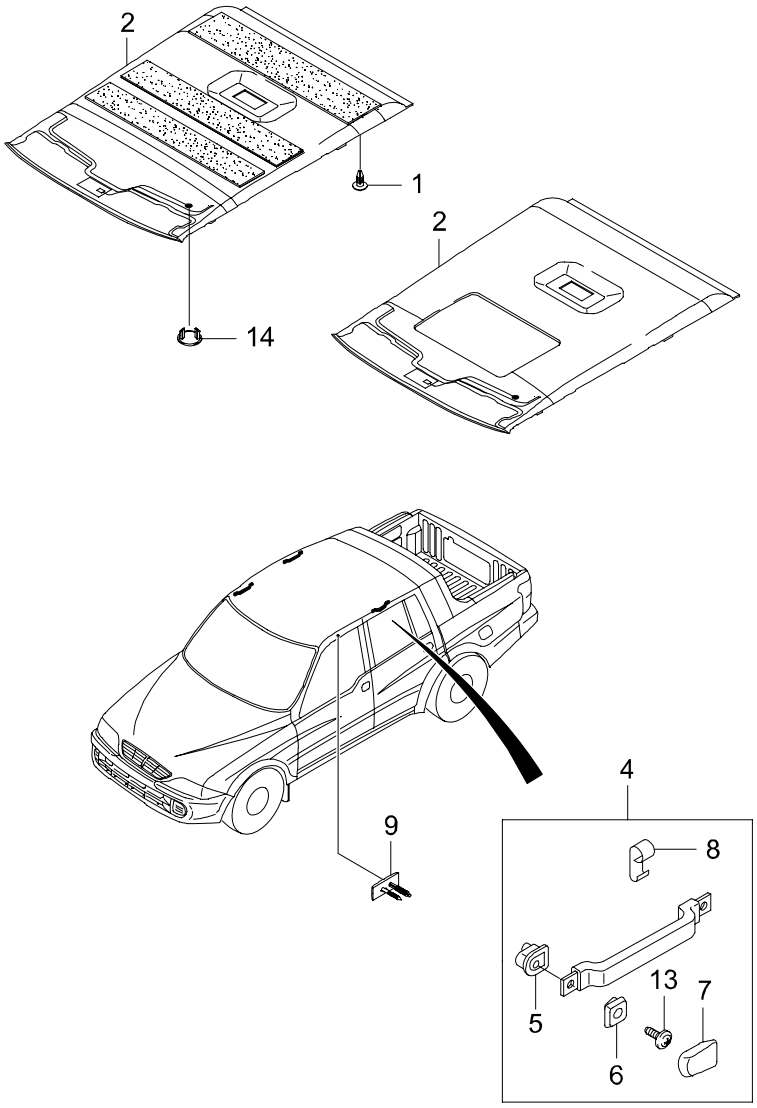

7330 HEAD LINING

ITC	KEY NO. PART NO	PART NAME OPTION	L/R	T/M	DRV	MODEL 662LA	EFF. DATE FROM	EFF. DATE TO	REMARK
	[01]	*FASTENER*							
	7681305000AAR					1	02'1201	06'0228	
	[02]	*HEAD LINING ASSY*							
	7751007100AAR	-S/ROOF				1	03'0305	06'0228	
Y	7751007001AAR	-S/ROOF				1	02'1211	06'0228	INCLUDE B/COVER(KEY NO.14¹ø)
	7751007250AAR	S/ROOF				1	03'1226	04'0316	2004M/Y
	[04]	*HANDLE ASSY-ROOF ASSIST*							
	7761005003AAR					1	02'1201	06'0228	FRT
	7762005003AAR					2	02'1201	06'0228	REAR
	[05]	*HOLDER-ROOF ASSIST HANDLE NO1*							
	7761205000					1	02'1201	06'0228	
	[06]	*HOLDER-ROOF ASSIST HANDLE NO2*							
	7761305000					1	02'1201	06'0228	
	[07]	*CAP-ROOF ASSIST HANDLE*							
	7761505001AAR					1	02'1201	06'0228	
	[08]	*COAT-HOOK*							
	7763105000AAR					1	02'1201	06'0228	
	[09]	*FASTENER*							
	7731205000AAR					1	02'1201	06'0228	
	[13]	*SCREW*							
	935146020D					1	02'1201	06'0228	
	[14]	*BLANKING COVER-MIC*							
	8955008001	-H/FREE				1	02'1201	06'0228	

7340 SUN ROOF

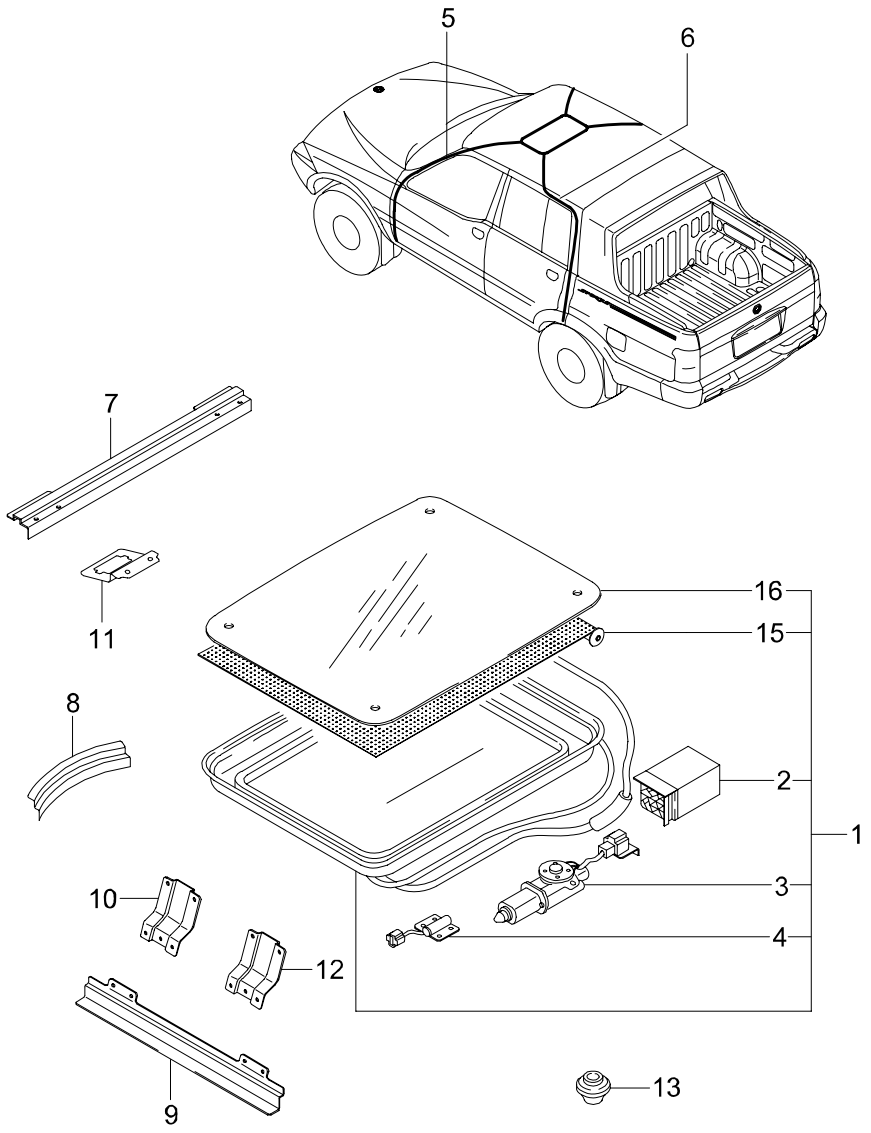

7340 SUN ROOF

ITC	KEY NO. PART NO	PART NAME OPTION	L/R	T/M	DRV	MODEL 662LA	EFF. DATE FROM	EFF. DATE TO	REMARK
	[01] 7170105052	*SUNROOF ASSY*				1	03'0924	04'0316	2004 M/Y
	[02] 7171705002	*MODULE ASSY-ROOF SLDING PNL* S/ROOF				1	03'1226	04'0316	2004 M/Y
	[03] 7172305010	*MOTOR-SUNROOF* S/ROOF				1	03'1226	04'0316	2004 M/Y
	[04] 7171805000	*SWITCH*				1	03'1226	04'0316	2004 M/Y
	[05] 7175105000	*HOSE-DRAIN FRT*				2	03'1226	04'0316	2004 M/Y
	[06] 7175207000	*HOSE-S/ROOF DRAIN-RR* S/ROOF				2	03'1226	04'0316	2004 M/Y
	[07] 7175405000	*REINF ASSY-ROOF OPENG FRT*				1	03'1226	04'0316	2004 M/Y
	[08] 7175505000	*REINF-ROOF OPENG CORNER*				4	03'1226	04'0316	2004 M/Y
	[09] 7175605000	*REINF ASSY-ROOF OPENG SIDE*				2	03'1226	04'0316	2004 M/Y
	[10] 7175705001	*BRKT-SUN ROOF BODY MTG FRT*	LH			1	03'1226	04'0316	2004 M/Y
	7176705001		RH			1	03'1226	04'0316	2004 M/Y
	[11] 7175905002	*BRKT-SUN ROOF SWITCH MTG*				1	03'1226	04'0316	2004 M/Y:NOT AVAILABLE
	[12] 7175805001	*BRKT-SUN ROOF BODY MTG RR*	LH			1	03'1226	04'0316	2004 M/Y
	7176805001		RH			1	03'1226	04'0316	2004 M/Y
	[13] 7179107000	*GROMMET-S/ROOF DRAIN HOSE*				2	03'1226	04'0316	2004 M/Y
	[15] 7178805050	*BLIND ASSY-SUNROOF ROLL* S/ROOF				1	03'1226	04'0316	2004 M/Y

7340 SUN ROOF

ITC	KEY NO. PART NO	PART NAME OPTION	L/R	T/M	DRV	MODEL 662LA									EFF. DATE FROM	EFF. DATE TO	REMARK
	[16] 7173105002	*PNL ASSY-GLASS* S/ROOF				1									03'1226	04'0316	2004 M/Y

7410 FRONT SEAT

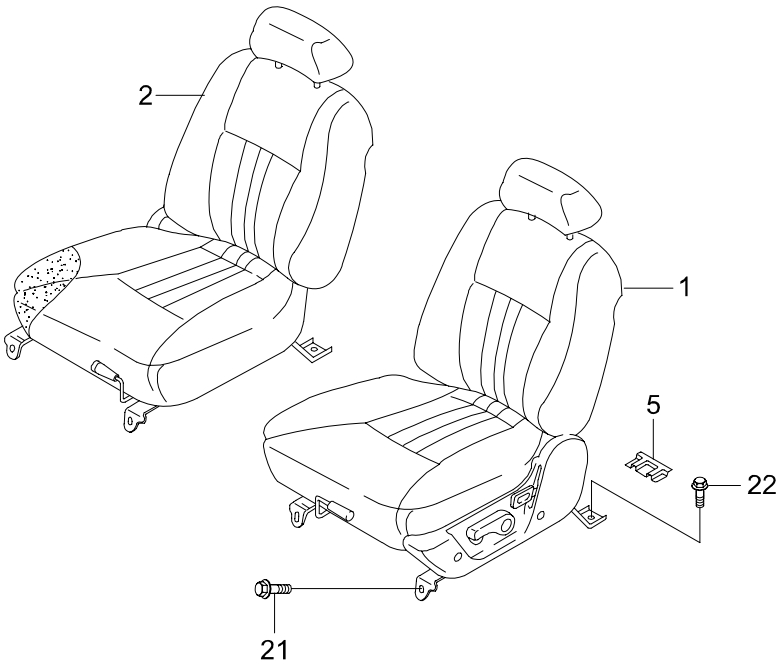

7410 FRONT SEAT

ITC	KEY NO. PART NO	PART NAME OPTION	L/R	T/M	DRV	MODEL 662LA									EFF. DATE FROM	EFF. DATE TO	REMARK
	[01]	*SEAT ASSY-FRT*															
	7400105833AAR		LH		L	1									02'1201	06'0228	LEATHER
	7400105633CBK		LH		R	1									02'1201	06'0228	WOVEN
	7400105733AAR		LH		R	1									03'1119	06'0228	LEATHER
N	7400105744CBK	-T/R	LH		L	1									03'0303	06'0228	WOVEN
	[02]	*SEAT ASSY-FRT*															
	7400205623AAR		RH		L	1									02'1201	06'0228	LEATHER
	7400205634CBK		RH		R	1									02'1201	06'0228	WOVEN
	7400205733AAR		RH		R	1									02'1201	03'0302	LEATHER
Y	7400205734AAR		RH		R	1									03'0303	06'0228	LEATHER
N	7400205892CBK	-U/TRAY	RH		L	1									03'0303	06'0228	WOVEN
	[05]	*COVER-FRT SEAT MTG RR OTR*															
	7411505000AAR		LH			1									02'1201	06'0228	
	7411605000AAR		RH			1									02'1201	06'0228	
	[21]	*BOLT*															
	959170830D					6									02'1201	06'0228	M8X1.25X30
	[22]	*BOLT*															
	959170840D					2									02'1201	06'0228	M8X1.25X40

7420 FRONT SEAT PARTS

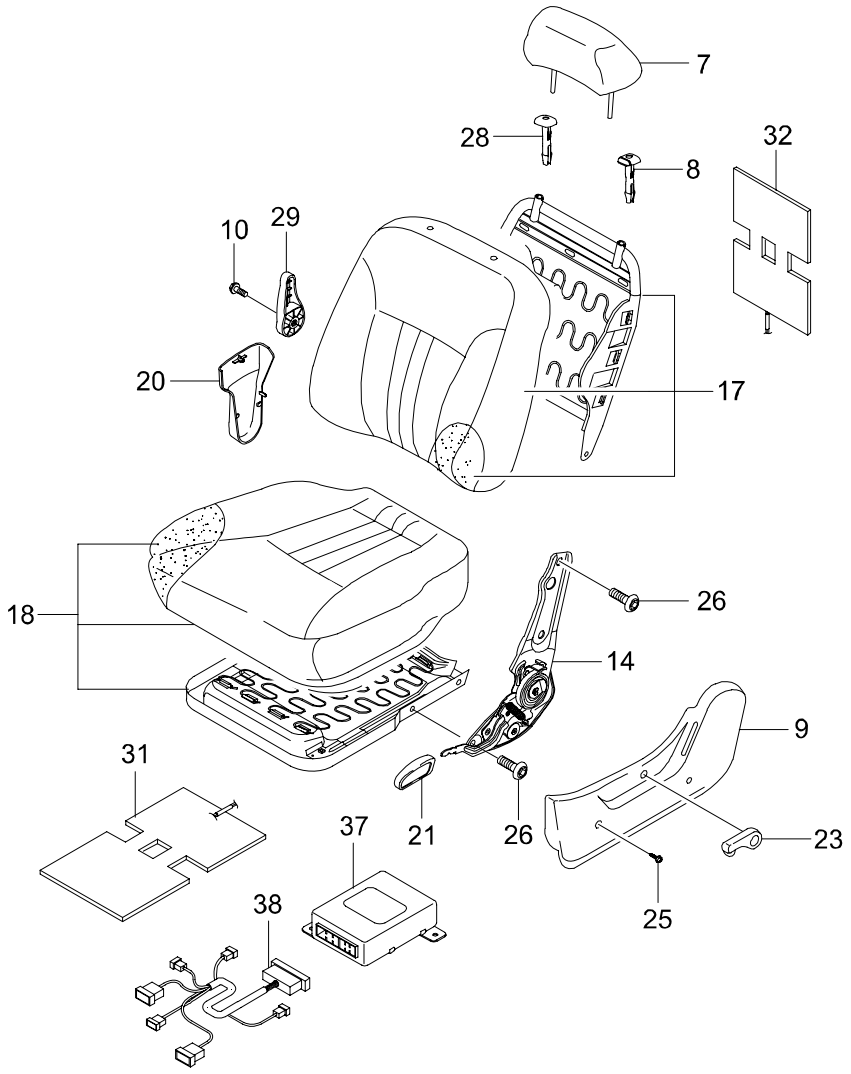

7420 FRONT SEAT PARTS

ITC	KEY NO. PART NO	PART NAME OPTION	L/R	T/M	DRV	MODEL 662LA	EFF. DATE FROM	EFF. DATE TO	REMARK
	[07]	*HEAD REST ASSY*							
	7410305000CBK	FLAT WOVEN				4	02'1201	03'0302	TILTING,POLE GAP:180M
	7410505000AAR	LEATHER				4	02'1201	03'0302	TILTING,POLE GAP:180M
	7510605000CBK	FLAT WOVEN				4	02'1201	03'0302	NOT TILTING
	7410605001AAR	LEATHER				4	02'1201	03'0302	NOT TILTING
	0300253CBK	FLAT WOVEN,+TILT				2	03'0303	06'0228	REGULATION AREA(LARGE SIZE)
	0000441AAR	LEATHER,+TILT				2	03'0303	06'0228	REGULATION AREA(LARGE SIZE)
	0300254CBK	F/WOVEN,NON TILT,REAR				2	03'0303	06'0228	REGULATION AREA(LARGE SIZE),ADR ONLY
	[08]	*SLEEVE-HEADREST*							
	7410105000AAR		LH			2	02'1201	06'0228	
	[09]	*COVER ASSY-SHIELD*							
	7410805000AAR		LH			1	02'1201	06'0228	
	7410905000AAR		RH			1	02'1201	06'0228	
	[10]	*SCREW*							
	481472					2	02'1201	06'0228	
	[14]	*RECLINER ASSY-FRT*							
	7420505000		LH			1	02'1201	06'0228	
	7420605000		RH			1	02'1201	06'0228	
	[17]	*SEAT BACK ASSY-FRT*							
	9701408CBK	FLAT WOVEN				1	02'1201	06'0228	NOT SUPPLY
	9701408AAR	LEATHER	RH			1	02'1201	06'0228	NOT SUPPLY
	[18]	*CUSHION ASSY-FRT SEAT*							
	9701401CBK	FLAT WOVEN				1	02'1201	06'0228	NOT SUPPLY
	9701401AAR	LEATHER	LH			1	02'1201	06'0228	NOT SUPPLY
	[20]	*COVER-HINGE INR*							
	52077		LH			2	02'1201	06'0228	
	52078		RH			2	02'1201	06'0228	
	[21]	*KNOB-RECLINER*							
	7440205000AAR					1	02'1201	06'0228	
	[23]	*LEVER ASSY-HIGHT ADJUSTER*							
	7450305000AAR		LH			1	02'1201	06'0228	
	7450205000AAR		RH			1	02'1201	06'0228	

7420 FRONT SEAT PARTS

ITC	KEY NO. PART NO	PART NAME OPTION	L/R	T/M	DRV	MODEL 662LA									EFF. DATE FROM	EFF. DATE TO	REMARK
	[25] 388049	*SCREW*				2									02'1201	06'0228	
	[26] 48514	*BOLT-SOCKET*				4									02'1201	06'0228	
	[28] 7410205000AAR	*SLEEVE ASSY-HEAD REST*	RH			1									02'1201	06'0228	
	[29] 7410705000AAR	*LEVER-LUMBAR SUPT*				1									02'1201	06'0228	
	[31] 7410106100	*WARMER ASSY-FRT SEAT CUSION*				1									03'1226	06'0228	
	[32] 7410106110	*WARMER ASSY-FRT SEAT BACK*				1									03'1226	06'0228	
	[37] 8731005800	*SEAT WARMER UNIT*				1									03'1226	06'0228	
	[38] 9701321	*WIRING ASSY-SEAT WARMER*				1									03'1226	06'0228	

7430 FRONT SEAT BELT

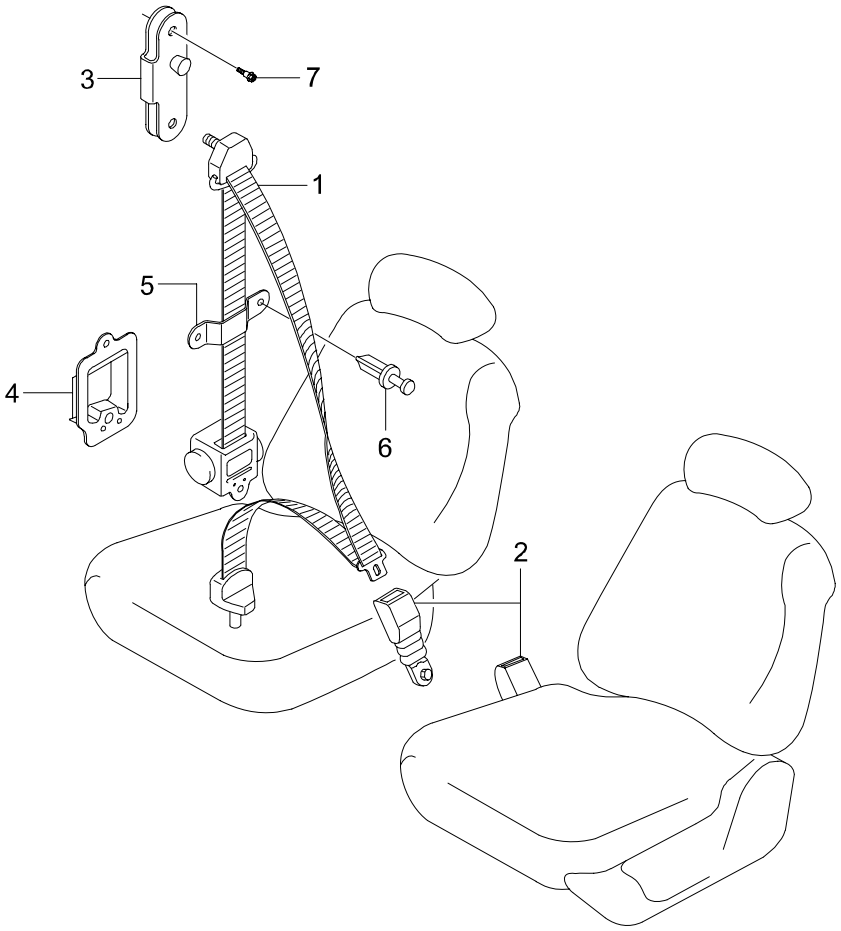

7430 FRONT SEAT BELT

ITC	KEY NO. PART NO	PART NAME OPTION	L/R	T/M	DRV	MODEL 662LA									EFF. DATE FROM	EFF. DATE TO	REMARK
	[01]	*SEAT BELT ASSY-FRT 3PT*															
	7461007000AAR		LH			1									02'1201	06'0228	
	7462007000AAR		RH			1									02'1201	06'0228	
	[02]	*BUCKLE ASSY-FRT*															
	7463005172AAR		LH			1									02'1201	06'0228	DIRVER
	7465005171AAR		RH			1									02'1201	06'0228	PASSENGER
	[03]	*ADJUSTER ASSY-HEIGHT FRT SEAT*															
	7463305000AAR					1									02'1201	06'0228	
	[04]	*COVER-FRT SEAT BELT DUST*															
	7463405000		LH			1									02'1201	06'0228	
	7463505000		RH			1									02'1201	06'0228	
	[05]	*GUIDE-SEAT BELT WEBBING*															
	7463605000					2									02'1201	06'0228	
	[06]	*SCRIVET*															
	7971705000					4									02'1201	06'0228	
	[07]	*BOLT*															
	7463705000					4									02'1201	06'0228	

7440 SEAT GUIDE RAIL

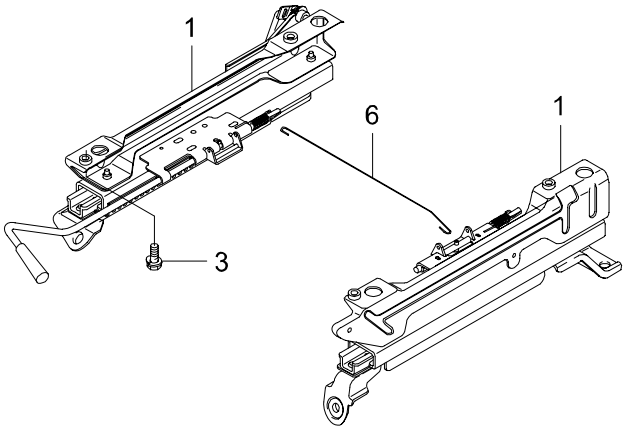

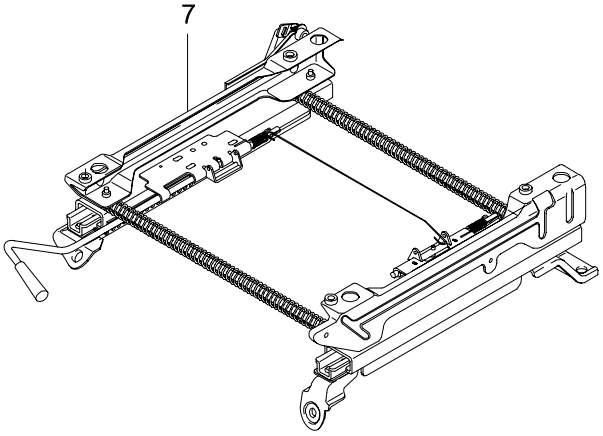

7440 SEAT GUIDE RAIL

ITC	KEY NO. PART NO	PART NAME OPTION	L/R	T/M	DRV	MODEL 662LA									EFF. DATE FROM	EFF. DATE TO	REMARK
	[01]	*RAIL ASSY-FRT GUIDE*															
	52109					1									02'1201	06'0228	PASSENGER INNER
Y	7411005020		RH		L	1									02'0901	06'0228	PASSENGER(LH),MNL
	52110					1									02'1201	06'0228	PASSENGER OUTER
Y	7411005030		RH		L	1									02'0901	06'0228	PASSENGER(RH).MNL
	[03]	*BOLT*															
	48006					8									02'1201	06'0228	
	[06]	*WIRING-CONNECTOR*															
	59368					8									02'1201	06'0228	
	[07]	*RAIL ASSY-FRT GUIDE*															
	7411005000		LH		L	1									02'0901	06'0228	DRIVE MNL(LH/RH ASSY)
	7411005010		RH		R	1									00'0613	06'0228	DRIVE MNL(LH/RH ASSY)
	7411005070		RH		R	1									03'0602	06'0228	DRIVE POWER SEAT(WITH MOTOR)
	7411005060		LH		L	1									02'0901	06'0228	DRIVE POWER (WITH MOTOR)

7510 REAR SEAT

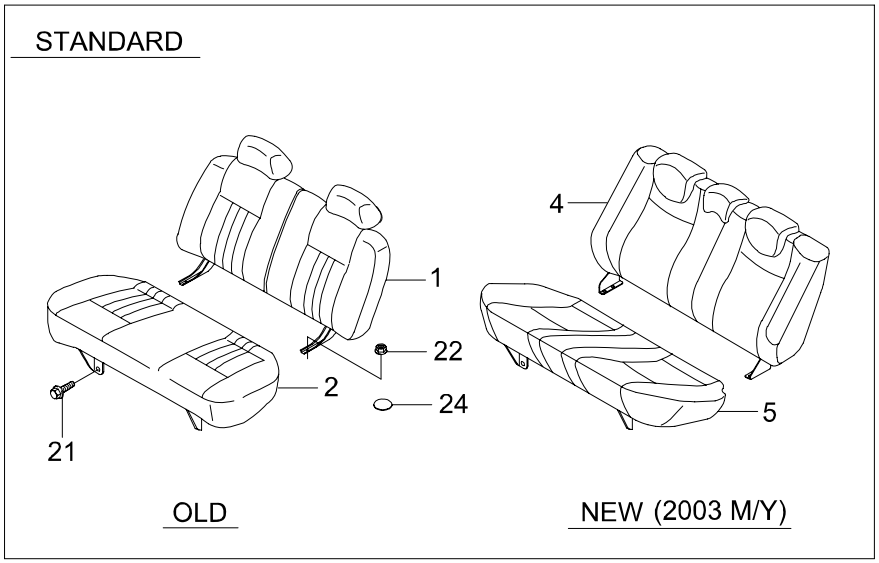

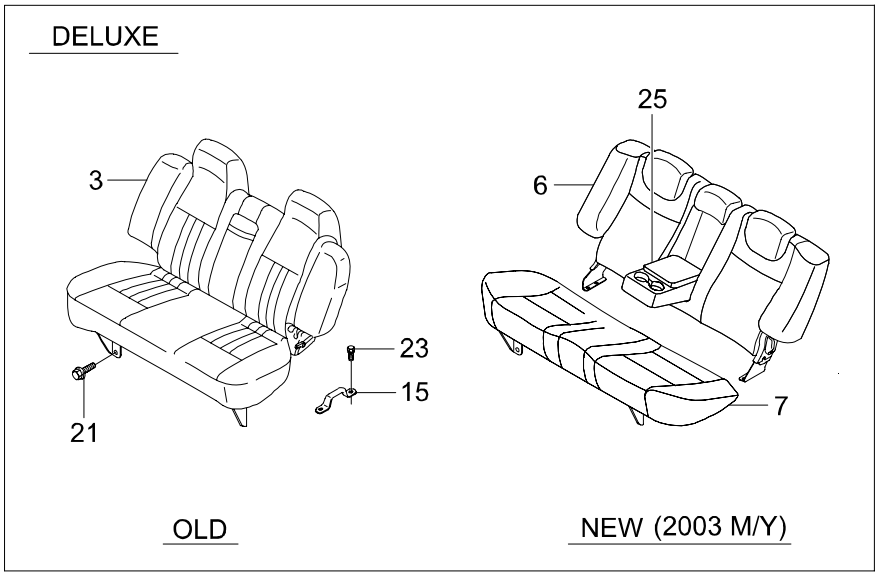

7510 REAR SEAT

ITC	KEY NO. PART NO	PART NAME OPTION	L/R	T/M	DRV	MODEL 662LA									EFF. DATE FROM	EFF. DATE TO	REMARK
	[01]	*SEAT ASSY-RR BACK*															
	7500007001CBK	STD(FIXED SEAT)				1									02'1201	03'0302	
	[02]	*SEAT ASSY-RR CUSHION*															
	7500007011CBK	STD(FIXED SEAT)				1									02'1201	03'0302	
	[03]	*SEAT ASSY-RR*															
	7500007040CBK	DLX(6:4 SPLIT SEAT)				1									02'1201	03'0302	GENERAL AREA(EXCEPT M/EAST)
	7500005800CBK	STD			R	1									04'0129	06'0228	ONLY AUSTRALIA
	[04]	*SEAT ASSY-RR BACK*															
	7510007000CBK	STD,F/WOVEN				1									03'0303	04'0309	
Y	7510007001CBK	STD,F/WOVEN				1									04'0310	06'0228	
	7510007010CBK	EU AREA,STD,F/WOVEN				1									03'0303	04'0309	EU OPT:ONLY BACK(NON CUSH)
Y	7510007011CBK	EU,STD,F/WOVEN				1									04'0310	06'0228	
	[05]	*SEAT ASSY-RR CUSHION*															
	7520007000CBK	STD,F/WOVEN				1									03'0307	03'1001	03M/Y
Y	7520007001CBK	STD,F/WOVEN				1									03'1002	04'0309	
Y	7520007002CBK	STD,F/WOVEN				1									04'0310	06'0228	GENERAL
	[06]	*SEAT ASSY-RR BACK*															
	7511007000CBK	DLX,F/WOVEN				1									03'0303	03'0811	GENERAL
Y	7511007001CBK	DLX,F/WOVEN				1									03'0812	04'0309	GENERAL
Y	7511007002CBK	DLX,F/WOVEN				1									04'0310	06'0228	GENERAL
	7511007021CBK	EU,F/WOVEN,DLX				1									03'0915	04'0310	
Y	7511007022CBK	EU,F/WOVEN,DLX				1									04'0311	06'0228	
	7511007010AAR	DLX,LEATHER				1									03'0303	03'0811	2003M/Y,GENERAL
Y	7511007011AAR	DLX,LEATHER				1									03'0812	06'0228	GENERAL
	7511007031AAR	EU,R/LEATHER				1									03'0925	06'0228	
	[07]	*SEAT ASSY-RR CUSHION*															
	7521007000CBK	DLX,F/WOVEN				1									03'0303	03'0811	
Y	7521007001CBK	DLX,F/WOVEN				1									03'0812	04'0309	
Y	7521007002CBK	DLX,F/WOVEN				1									04'0310	06'0228	GENERAL
	7521007010AAR	DLX,LEATHER				1									03'0303	06'0228	
	[15]	*STRIKER-RR SEAT*															
	7591006001	DLX(6:4 SPLIT SEAT)				2									02'1201	06'0228	
	[21]	*BOLT*															
	959170830D					4									02'1201	06'0228	M8X1.25X30

7510 REAR SEAT

ITC	KEY NO. PART NO	PART NAME OPTION	L/R	T/M	DRV	MODEL 662LA									EFF. DATE FROM	EFF. DATE TO	REMARK
	[22]	*NUT*															
	928961000D	STD(FIXED SEAT)				4									02'1201	06'0228	M10X1.25
	[23]	*BOLT*															
	958371030D	DLX(6:4 SPLIT SEAT)				4									02'1201	06'0228	M10X1.25X30
	[24]	*TAPE-DR TOOLING HOLE SEALING*															
	7219105000	STD(FIXED SEAT)				2									02'1201	06'0228	
	[25]	*ARM REST ASSY-CTR*															
	75101050A0CBK					1									03'0303	03'0811	F/WOVEN
N	75101050A1CBK	CUP HOLDER,F/WOVEN				1									03'0812	06'0228	
	75101050A0AAR					1									03'0303	03'0811	LEATHER
N	75101050A1AAR	CUP HOLDER,LEATHER				1									03'0812	06'0228	

7520 REAR SEAT PARTS

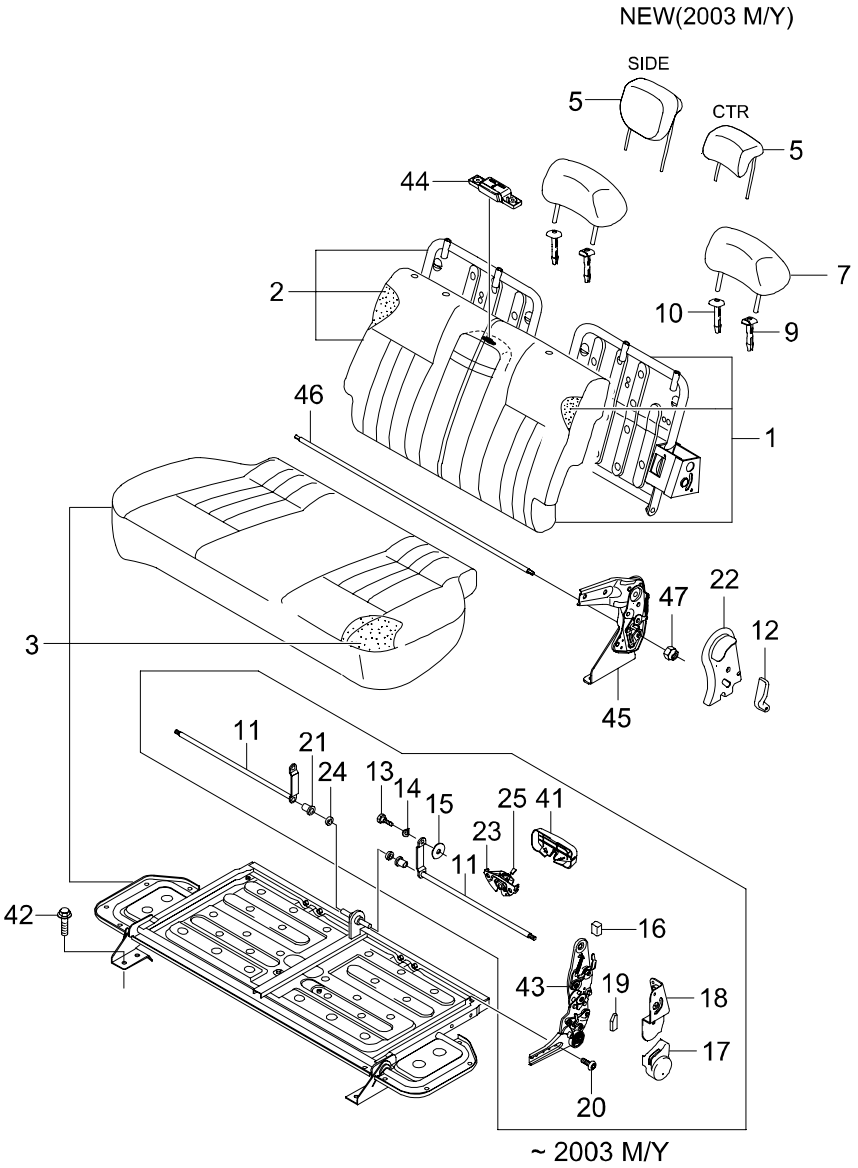

7520 REAR SEAT PARTS

ITC	KEY NO. PART NO	PART NAME OPTION	L/R	T/M	DRV	MODEL 662LA	EFF. DATE FROM	EFF. DATE TO	REMARK
	[01]	*SEAT BACK ASSY-RR*							
	0000916CBK	DLX(6:4 SPLIT SEAT)				1	02'1201	03'0302	NOT SUPPLY
	[02]	*SEAT BACK ASSY-RR*							
	0000917CBK	DLX(6:4 SPLIT SEAT)	RH			1	02'1201	03'0302	NOT SUPPLY
	[03]	*CUSHION-RR SEAT*							
	0000558CBK	DLX(6:4 SPLIT SEAT)				1	02'1201	03'0302	NOT SUPPLY
	[05]	*HEAD REST ASSY*							
	0300231CBK	F/WOVEN				2	03'0303	06'0228	SIDE,REGULATION AREA(LARGE SIZE)
	0300232CBK	F/WOVEN				1	03'0303	06'0228	CTR,REGULATION AREA(LARGE SIZE)
	0300234AAR	LEATHER				2	03'0303	06'0228	SIDE,REGULATION AREA(LARGE SIZE)
	0300235AAR	LEATHER				1	03'0303	06'0228	CTR,REGULATION AREA(LARGE SIZE)
	[07]	*HEAD REST ASSY*							
	7510605000CBK					2	02'1201	03'0302	
	0000548AAR	LEATHER,ADR				2	03'0303	06'0228	REGULATION AREA(LARGE SIZE)
	[09]	*SLEEVE-HEADREST*							
	7410105000AAR		LH			2	02'1201	06'0228	
	[10]	*SLEEVE ASSY-HEAD REST*							
	7410205000AAR		RH			2	02'1201	06'0228	
	[11]	*DRIVER ASSY*							
	52161					2	02'1201	03'0302	NOT SUPPLY
	[12]	*KNOB ASSY*							
	0202385AAR	2003M/Y	LH			1	03'0303	06'0228	
	0202386AAR	2003M/Y	RH			1	03'0303	06'0228	
	[13]	*BOLT*							
	47076					1	02'1201	03'0302	NOT SUPPLY
	[14]	*SPRING-TENSION*							
	11088731					1	02'1201	03'0302	NOT SUPPLY
	[15]	*BUSH*							
	54849					2	02'1201	03'0302	NOT SUPPLY

7520 REAR SEAT PARTS

ITC	KEY NO. PART NO	PART NAME OPTION	L/R	T/M	DRV	MODEL 662LA	EFF. DATE FROM	EFF. DATE TO	REMARK
	[16] 47098AAR	*KNOB-FOLDING*				2	02'1201	03'0302	
	[17] 0000534AAR	*COVER-RECLINER LWR*	LH			1	02'1201	03'0302	
	0000535AAR		RH			1	02'1201	03'0302	
	[18] 52189AAR	*COVER-RECLINER UPR*	LH			1	02'1201	03'0302	
	52190AAR		RH			1	02'1201	03'0302	
	[19] 000536AAR	*KNOB ASSY*				1	02'1201	03'0302	
	[20] 48001	*BOLT-SOCKET*				4	02'1201	03'0302	
	[21] 59301	*HINGE-BUSH*				2	02'1201	03'0302	NOT SUPPLY
	[22] 0202383AAR	*COVER-RECLINER* 2003M/Y	LH			1	03'0303	06'0228	
	0202384AAR	2003M/Y	RH			1	03'0303	06'0228	
	[23] 9701450	*LOCK ASSY-RR SEAT*				1	02'1201	03'0302	
	[24] 47109	*WASHER*				2	02'1201	03'0302	E TYPE,NON SUPPLY
	[25] 58706	*KNOB-LOCKER*				1	02'1201	03'0302	NOT SUPPLY
	[41] 59758	*COVER-RR LOCKER*				1	02'1201	03'0302	
	[42] 959170830D	*BOLT*				2	02'1201	03'0302	M8X1.25X30
	[43] 7540405000	*RECLINER ASSY-RR*	LH			1	02'1201	03'0302	

7520 REAR SEAT PARTS

ITC	KEY NO. PART NO	PART NAME OPTION	L/R	T/M	DRV	MODEL 662LA									EFF. DATE FROM	EFF. DATE TO	REMARK
	[43]	*RECLINER ASSY-RR*															
	7540505000		RH			1									02'1201	03'0302	
	[44]	*HUB-RR SEAT ARM REST LOCK*															
	75103050A0					1									02'1201	03'0302	LOCKING CTR A/REST
	[45]	*FOLDING DEVICE ASSY*															
	0202381		LH			1									03'0303	06'0228	
	0202382		RH			1									03'0303	06'0228	
	[46]	*ROD CONNECTOR*															
	0202374					1									03'0303	06'0228	NOT SUPPLY
	[47]	*NUT-NYLON*															
	48532					2									03'0303	06'0228	

7530 REAR SEAT BELT

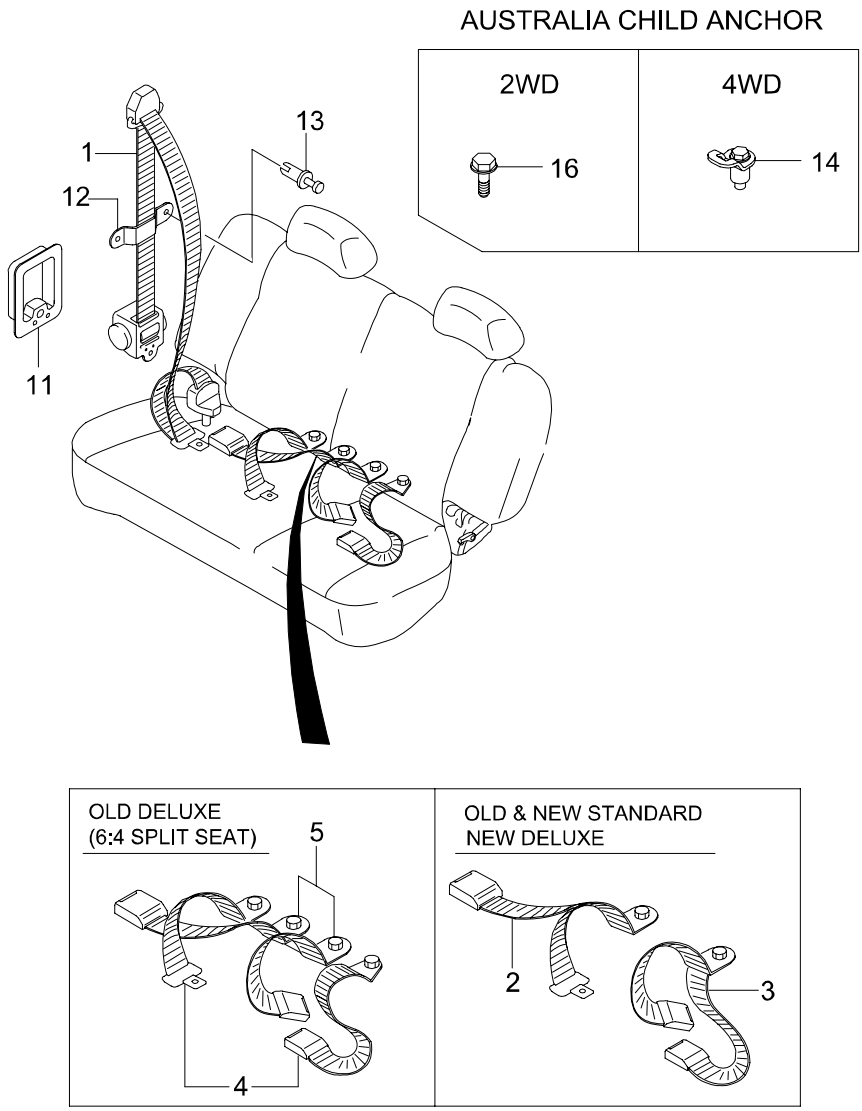

7530 REAR SEAT BELT

ITC	KEY NO. PART NO	PART NAME OPTION	L/R	T/M	DRV	MODEL 662LA	EFF. DATE FROM	EFF. DATE TO	REMARK
	[01]	*SEAT BELT ASSY-RR 3PT*							
	7561107000AAR		LH			1	02'1201	06'0228	GENERAL AREA(EXCEPT M/EAST)
	7561307000AAR	MIDDLE EAST AREA	LH			1	02'1201	06'0228	LABEL:WHITE,SPTICKER:"RR LH"
	7561207000AAR		RH			1	02'1201	06'0228	GENERAL AREA(EXCEPT M/EAST)
	7561407000AAR	MIDDLE EAST AREA	RH			1	02'1201	06'0228	LABEL:WHITE",SPTICKER:RR RH"
	[02]	*TONGUE & BUCKLE ASSY-RR SEAT*							
	7562107000AAR	STD,DLX				1	02'1201	06'0228	GENERAL AREA(EXCEPT M/EAST)
	7562207000AAR	STD,DLX				1	02'1201	06'0228	MIDDLE EAST AREA
	[03]	*BUCKLE ASSY-RR SEAT DOUBLE*							
	7562007000AAR	STD,DLX				1	02'1201	06'0228	
	[04]	*SEAT BELT ASSY-RR 2PT STATIC CTR*							
	7562005150AAR	DLX(6:4 SPLIT SEAT)				1	02'1201	03'0302	
N	7562007100AAR				R	1	05'1206	06'0228	ADR ONLY
	[05]	*BUCKLE ASSY-WEBING RR SEAT BELT SIDE*							
	7563005150AAR	DLX(6:4 SPLIT SEAT)				2	02'1201	03'0302	
	[11]	*COVER-RR SEAT BELT DUST*							
	7566005000					2	02'1201	06'0228	
	[12]	*GUIDE-SEAT BELT WEBBING*							
	7463605000					2	02'1201	06'0228	
	[13]	*SCRIVET*							
	7971705000					1	02'1201	06'0228	
	[14]	*ANCHOR ASSY-CHILD*							
	7567008000				R	2	03'0326	07'0313	AUSTRALIA AREA(4WD ONLY)
Y	7567008001				R	2	07'0314		AUSTRALIA AREA(4WD ONLY)
	[16]	*BOLT-CHILD ANCHOR*							
	7568005200				R	2	04'0901	06'0228	AUSTRALIA AREA(2WD ONLY)

7611 INSTRUMENT PANEL RHD (1)

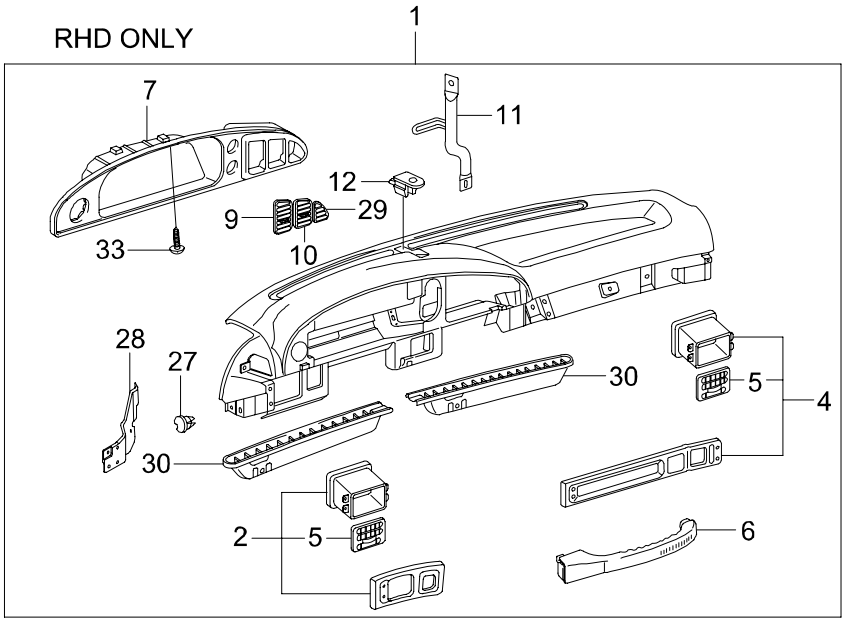

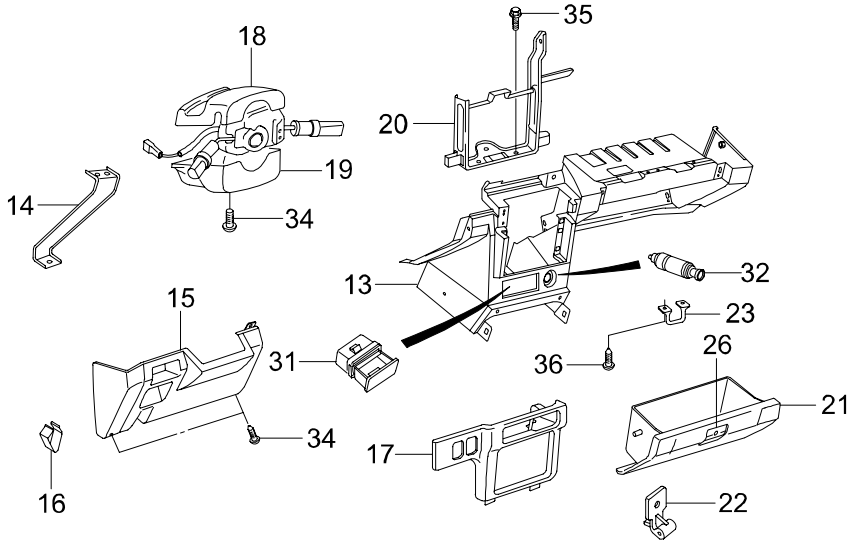

7611 INSTRUMENT PANEL RHD (1)

ITC	KEY NO. PART NO	PART NAME OPTION	L/R	T/M	DRV	MODEL 662LA	EFF. DATE FROM	EFF. DATE TO	REMARK
	[01]	*PNL ASSY-INSTRUMENT*							
	7650105305UAH	W/G			R	1	02'1201	06'0228	
	7650105907AAT	-W/GRAIN			R	1	02'1201	06'0228	
	[02]	*PNL ASSY-UPR FACIA-RH*							
	7650305302UAH	W/G	RH		R	1	02'1201	06'0228	
	7650305902AAT		RH		R	1	02'1201	06'0228	
	[04]	*PNL ASSY-UPR FACIA-LH*							
	7654005302UAH	W/G	LH		R	1	02'1201	06'0228	
	7654005902AAT		LH		R	1	02'1201	06'0228	
	[05]	*NOZZLE ASSY-SIDE AIR VENT*							
	6966005000AAT				R	2	02'1201	06'0228	
	[06]	*HANDLE ASSY-CRASH PAD*							
	7661005304UAH				R	1	02'1201	06'0228	W/G
	7661005906AAT				R	1	02'1201	06'0228	
	[07]	*PNL ASSY-CLUSTER FACIA*							
	7655005902LAD				R	1	02'1201	06'0228	
	[09]	*NOZZLE-CTR AIR VENT NO1*							
	69640059A1				R	1	02'1201	06'0228	
	[10]	*NOZZLE-CTR AIR VENT NO2*							
	69650059A1				R	1	02'1201	06'0228	
	[11]	*BRACE ASSY-COWL CROSS MEMBER CTR*							
	5152205901				R	1	02'1201	06'0228	
	[12]	*COVER-CRASH PAD MAIN MTG NO1*							
	7652705000AAT				R	1	02'1201	06'0228	
	[13]	*PNL ASSY-CRASH PAD LWR MAIN*							
	7656005192AAR				R	1	02'1201	06'0228	
	[15]	*PNL ASSY-CRASH PAD LWR SIDE*							
	7657005906AAR				R	1	02'1201	06'0228	
	[16]	*CLIP*							
	7658505000					1	02'1201	06'0228	

7611 INSTRUMENT PANEL RHD (1)

ITC	KEY NO. PART NO	PART NAME OPTION	L/R	T/M	DRV	MODEL 662LA	EFF. DATE FROM	EFF. DATE TO	REMARK
	[17]	*PNL ASSY-CTR FACIA*							
	7658005132UAH	W/G			R	1	02'1201	06'0228	
	7658005192LAD				R	1	02'1201	06'0228	
	[19]	*PNL ASSY-SHROUD LWR*							
	7664005501LAD					1	02'1201	06'0228	
	[20]	*BRKT ASSY-CTR SUPT*							
	7665005192				R	1	02'1201	06'0228	
	[21]	*BOX ASSY-GLOVE*							
	7771005905AAR				R	1	02'1201	06'0228	
	[22]	*HINGE-GLOVE BOX*							
	7787105000				R	2	02'1201	06'0228	
	[23]	*STRIKER-GLOVE BOX*							
	7775005000					1	02'1201	06'0228	
	[26]	*LOCK ASSY-GLOVE BOX*							
	7108005001AAR				R	1	02'1201	06'0228	
	[27]	*COVER-LWR BLANKING*							
	7773505001AAR				R	1	02'1201	06'0228	
	[28]	*BRKT-SIDE MTG-RH*							
	7652405002		RH		R	1	02'1201	06'0228	
	[29]	*COVER-CLUSTER BLANK*							
	8584105900LAB				R	1	02'1201	06'0228	
	[30]	*COVER-DEFROSTER NOZZLE-RH*							
	6952505900		LH		R	1	02'1201	06'0228	
	6952005900		RH		R	1	02'1201	06'0228	
	[31]	*ASH TRAY-FRT*							
	7623005100AAR				R	1	02'1201	06'0228	
	[32]	*CIGAR LIGHTER ASSY*							
	8121005840				R	1	02'1201	06'0228	FRT CRASH PAD
	[33]	*SCREW*							
	937745016D				R	2	02'1201	06'0228	M5X16

7611 INSTRUMENT PANEL RHD (1)

ITC	KEY NO. PART NO	PART NAME OPTION	L/R	T/M	DRV	MODEL 662LA									EFF. DATE FROM	EFF. DATE TO	REMARK
	[34] 9377540161	*SCREW*			R	1									02'1201	06'0228	
	[35] 9150406200	*BOLT(M6X1.0)*			R	1									02'1201	06'0228	M6X1.0
	[36] 938045018D	*SCREW*			R	4									02'1201	06'0228	

7612 INSTRUMENT PANEL(2)

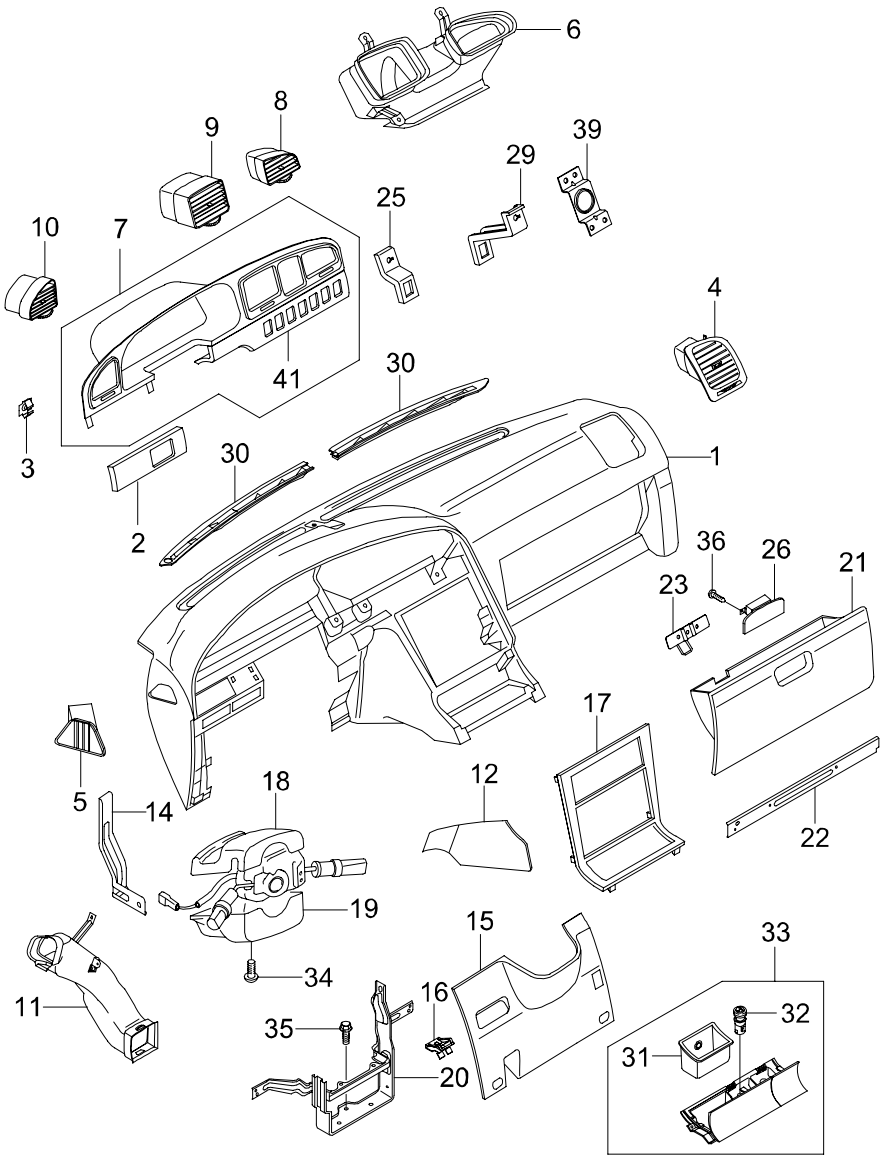

7612 INSTRUMENT PANEL(2)

ITC	KEY NO. PART NO	PART NAME OPTION	L/R	T/M	DRV	MODEL 662LA	EFF. DATE FROM	EFF. DATE TO	REMARK
	[01]	*PNL ASSY-INSTRUMENT*							
	7650105408AAT				L	1	02'1201	06'0228	
	[02]	*PNL ASSY-CLUSTER FACIA LWR*							
	7653005403LAD		LH			1	02'1201	06'0228	
	[03]	*NUT*							
	7652505000					1	02'1201	06'0228	M5
	[04]	*LOUVER ASSY-AIR VENT*							
	6963005402AAT					1	02'1201	06'0228	
	[05]	*COVER ASSY-SIDE DEFROSTER NOZZLE*							
	6953005401AAT		LH			1	02'1201	06'0228	
	6953505401AAT		RH			1	02'1201	06'0228	
	[06]	*DUCT ASSY- CTR AIR VENT*							
	6933005400					1	02'1201	06'0228	
	[07]	*PNL ASSY-CLUSTER FACIA*							
	7655005403LAD					1	02'1201	05'0223	
O	7655005406LAD					1	05'0224	06'0228	
	7655005483UAH	W/GRAIN				1	02'1201	03'0302	
N	7655005485UAR	W/GRAIN				1	03'0303	06'0228	2003 M/Y
	[08]	*LOUVER ASSY-AIR VENT CTR*							
	6964005401LAD		RH			1	02'1201	06'0228	
	[09]	*LOUVER ASSY-AIR VENT CTR*							
	6961005401LAD		LH			1	02'1201	06'0228	
	[10]	*LOUVER ASSY-AIR VENT SIDE*							
	6962005401LAD		LH			1	02'1201	06'0228	
	[11]	*DUCT ASSY-SIDE AIR VENT*							
	6934605400		LH			1	02'1201	06'0228	
	[12]	*COVER ASSY-CRASH PAD CTR LWR*							
	7659005404		LH			1	02'1201	06'0228	
	7659505404		RH			1	02'1201	06'0228	
	[14]	*BRKT-CRASH PAD SIDE MTG*							
	7652605402		LH			1	02'1201	06'0228	
	7652405404		RH			1	02'1201	06'0228	

7612 INSTRUMENT PANEL(2)

ITC	KEY NO. PART NO	PART NAME OPTION	L/R	T/M	DRV	MODEL 662LA	EFF. DATE FROM	EFF. DATE TO	REMARK
	[15]	*PNL ASSY-CRASH PAD LWR MAIN*							
	7656005403AAT					1	02'1201	04'0219	
N	7656005404AAT				L	1	04'0220	06'0228	
	[16]	*CLIP-SPRING*							
	7149705000					3	02'1201	06'0228	
	[17]	*PNL ASSY-CTR FACIA*							
	7658005403LAD					1	02'1201	05'0427	
Y	7658005404LAD					1	05'0428	06'0228	
N	7658005483UAH	W/GRAIN				1	02'1201	03'0302	
N	7658005483UAR	W/GRAIN				1	03'0303	05'0427	
Y	7658005484UAR	W/GRAIN				1	05'0428	06'0228	
	[18]	*PNL ASSY-SHROUD UPR*							
	7663005501LAD					1	02'1201	06'0228	
	[19]	*PNL ASSY-SHROUD LWR*							
	7664005500LAD					1	02'1201	03'0924	
Y	7664005501LAD					1	03'0925	06'0228	
	[20]	*BRKT-CTR SUPT*							
	7665005404					1	02'1201	06'0228	
	[21]	*BOX ASSY-GLOVE*							
	7771005405AAT					1	02'1201	06'0228	
	[22]	*BRKT-GLOVE BOX MTG*							
	7651505404					1	02'1201	06'0228	
	[23]	*STRIKER ASSY-GLOVE BOX*							
	7775005402					1	02'1201	06'0228	
	[25]	*BRKT ASSY-CLUSTER GAUGE*							
	7652205402					1	02'1201	06'0228	
	[26]	*LOCK ASSY-GLOVE BOX*							
	7108005400					1	02'1201	06'0228	
	[29]	*BRKT ASSY-CLUSTER GAUGE*							
	7652305402					1	02'1201	06'0228	
	[30]	*COVER-DEFROSTER NOZZLE*							
	6952005402		LH			1	02'1201	06'0228	
	6952505402		RH			1	02'1201	06'0228	

7612 INSTRUMENT PANEL(2)

ITC	KEY NO. PART NO	PART NAME OPTION	L/R	T/M	DRV	MODEL 662LA									EFF. DATE FROM	EFF. DATE TO	REMARK
	[31]	*ASH TRAY*															
	7794605401					1									02'1201	06'0228	
	[32]	*CIGAR LIGHTER ASSY*															
	8120005701					1									02'1201	06'0228	WITH WIRE&SOCKET
	[33]	*ASH TRAY-FRT*															
	7794005403LAD					1									02'0901	06'0228	
	[34]	*SCREW*															
	9380450162					2									02'1201	06'0228	M5X16
	980640512B					1									02'1201	06'0228	M5X0.8X12
	[35]	*BOLT*															
	9111406161					1									02'1201	06'0228	M5X18
	[36]	*SCREW*															
	935544020D					2									02'0901	06'0228	M4X0.7
	[39]	*BRKT-CRASH PAD CTR UPR MTG*															
	7651305401LAD					1									02'1201	06'0228	
	[41]	*PNL-CLUSTER LWR*															
	7655605402LAD		RH		L	1									04'0914	06'0228	
	7655605482UAH	W/GRAIN	RH		L	1									04'0914	06'0228	
	7655605482UAR	W/GRAIN	RH		L	1									04'0914	06'0228	

7630 CONSOLE

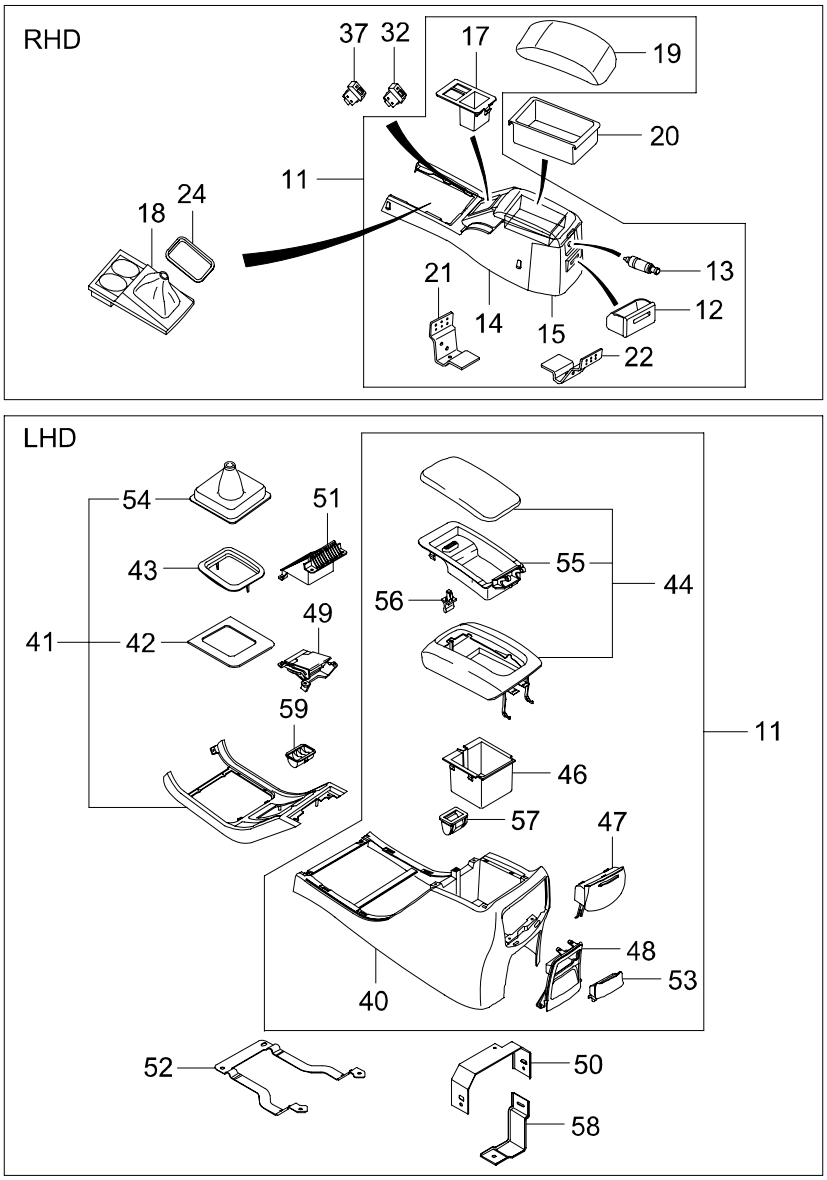

7630 CONSOLE

ITC	KEY NO. PART NO	PART NAME OPTION	L/R	T/M	DRV	MODEL 662LA									EFF. DATE FROM	EFF. DATE TO	REMARK
	[11]	*CONSOLE ASSY-FRT*															
	7790005221LAD			M		1									02'1201	04'1207	
O	7790005222LAD			M		1									04'1208	06'0228	A/REST LOCK TYPE CHANGE (HOOK=>LEVER& LATCH)
	7790005241UAR	W/GRAIN		M		1									03'0303	04'1207	
O	7790005242UAR	W/G,TOUCH,A/TRAY		M	L	1									04'1208	06'0228	A/REST LOCK TYPE CHANGE(HOOK=>LATCH)
	7790105241UAR	W/GRAIN		A		1									03'0303	04'1206	
O	7790105242UAR	BTRA W/G A/TRAY TOUCH		A	L	1									04'1207	06'0228	A/REST LOCK TYPE CHANGE(HOOK=>LATCH)
	7790005602AAR				R	1									02'1201	05'0407	
O	7790005603AAR				R	1									05'0408	06'0228	
	7790005202LAD	M/T -W/G A/TRAY		M	L	1									04'1210	06'0228	A/REST LOCK TYPE CHANGE (HOOK=>LATCH)
	7790105202LAD	A/T,BTRA -W/G A/TRAY		A	L	1									04'1209	06'0228	A/REST LOCK TYPE CHANGE(HOOK=>LATCH)
	[12]	*ASH TRAY-RR DR*															
	7117003801AAR				R	1									02'1201	06'0228	
	[13]	*CIGAR LIGHTER ASSY*															
	8121005101				R	1									02'1201	06'0228	
	8121005830				R	1									02'1201	06'0228	RR CONSOLE
	[14]	*CONSOLE ASSY-FRT*															
	7791005151AAR				R	1									02'1201	04'0202	
O	7791005152AAR				R	1									04'0203	06'0228	COLOR CHANGED
	[15]	*CONSOLE ASSY-RR*															
	7793005101AAR				R	1									02'1201	06'0228	
	[17]	*COVER-FRT CONSOLE SWITCH*															
	7797005501AAR				R	1									02'1201	06'0228	
	[18]	*PNL ASSY-RR FACIA*															
	7796005102AAR	SEMI		M	R	1									02'1201	06'0228	
	7796005550AAR			A	R	1									02'1201	06'0228	
	[19]	*ARM REST ASSY-CONSOLE*															
	7792005101AAR				R	1									02'1201	04'0202	
O	7792005102AAR				R	1									04'0203	06'0228	

7630 CONSOLE

ITC	KEY NO. / PART NO	PART NAME / OPTION	L/R	T/M	DRV	MODEL 662LA	EFF. DATE FROM	EFF. DATE TO	REMARK
	[20]	*TRAY-CONSOLE FRT*							
	7795205150AAR				R	1	02'1201	06'0228	
	[21]	*BRKT-CONSOLE*							
	7795005112		LH		R	1	02'1201	06'0228	
	[22]	*BRKT-CONSOLE*							
	7796005111		RH		R	1	02'1201	06'0228	
	[24]	*COVER-AUTO INDICATOR*							
	7791505510XAA				R	1	02'1201	03'0115	
Y	7791505510AAR	BTRA		A	R	1	03'0116	06'0228	
	[32]	*SWITCH ASSY-H/LAMP L/DEVICE*							
	8311105030LAD				R	1	02'1201	04'1231	
Y	8311105031LAD				R	1	05'0101	06'0228	USED PB FREE BULB
	[37]	*SWITCH ASSY-SEAT HEATED*							
	8589005811LAD	S/WARMER			R	1	03'1226	04'1231	2004M/Y, RHD ONLY
Y	8589005812LAD	S/WARMER			R	1	05'0101	06'0228	USED PB FREE BULB
	[40]	*CONSOLE ASSY-MAIN*							
	7791005404AAT					1	02'1201	04'1207	
N	7791005405AAT				L	1	04'1208	06'0228	A/REST LOCK TYPE CHANGE(HOOK=>LATCH)
	[41]	*FACIA ASSY-FRT CONSOLE*							
	7793005414AAT			M		1	02'1201	06'0228	
	7793005814AAT			A		1	02'1201	06'0228	
	[42]	*COVER-CONSOLE UPR*							
	7793205400LAD			M		1	02'1201	06'0228	
	7793205800LAD			A		1	02'1201	06'0228	
	[43]	*COVER-AUTO INDICATOR*							
	7792505401LAD			A		1	02'1201	06'0228	
	[44]	*ARM REST ASSY-MAIN*							
	7770005404AAT					1	02'1201	04'1207	
N	7791105401AAT				L	1	04'1208	06'0228	A/REST LOCK TYPE CHANGE(HOOK=>LATCH)
	[46]	*TRAY-CONSOLE*							
	7795205404AAT					1	02'1201	06'0228	

7630 CONSOLE

ITC	KEY NO. PART NO	PART NAME OPTION	L/R	T/M	DRV	MODEL 662LA	EFF. DATE FROM	EFF. DATE TO	REMARK
	[47] 7797505402LAD	*BLANKING COVER-RR CUP HOLDER*				1	02'1201	06'0228	
	[48] 7791505402AAT	*FACIA ASSY-RR CONSOLE*				1	02'1201	06'0228	
	[49] 7796005402HAQ	*HOLDER ASSY-CONSOLE FRT CUP*				1	02'1201	06'0228	
	[50] 7796205402	*BRKT ASSY-CONSOLE RR UPR MTG*				1	02'1201	06'0228	
	[51] 7796505401AAT	*BLANKING COVER-FRT CUP HOLDER*				1	02'1201	06'0228	
	[52] 7790205402	*BRKT ASSY-CONSOLE FRT*				1	02'1201	06'0228	
	[53] 7795005401LAD	*ASH TRAY-RR CONSOLE*				1	02'1201	06'0228	
	[54] 7793505402LAD	*BOOT ASSY-FRT CONSOLE*		M		1	02'0901	06'0228	
	[55] 7776905402AAT	*TRAY-ARM REST*				1	02'1201	06'0228	
	[56] 7771405400	*LATCH-CONSOLE LID*				1	02'1201	06'0228	
	[57] 7792005400	*LOCKER ASSY-CONSOLE BODY*				1	02'1201	06'0228	
	[58] 7791305401	*BRKT ASSY-CONSOLE RR LWR*	LH			1	02'0901	06'0228	
	7792305401		RH			1	02'0901	06'0228	
	[59] 8589105801AAR	*BLANKING COVER-SEAT HEATING SWITCH*				1	02'1201	06'0228	COIN TRAY

7720 FRT FLOOR CARPET

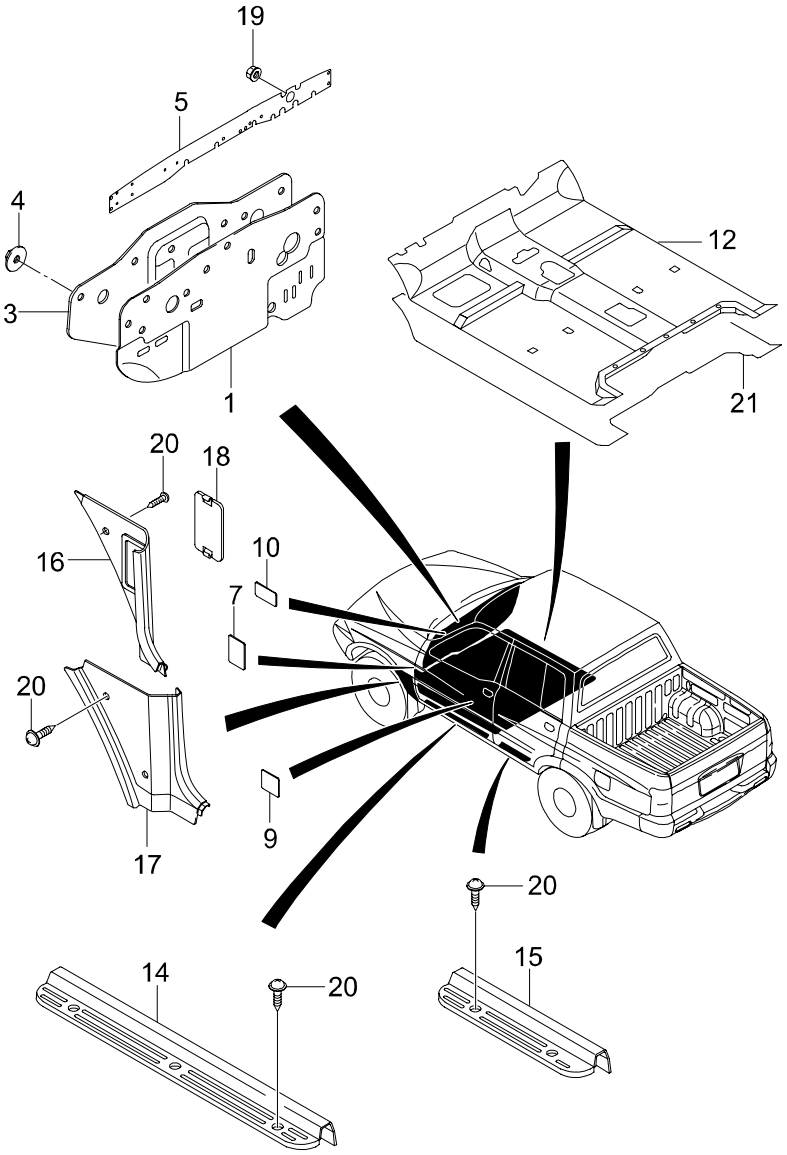

7720 FRT FLOOR CARPET

ITC	KEY NO. PART NO	PART NAME OPTION	L/R	T/M	DRV	MODEL 662LA	EFF. DATE FROM	EFF. DATE TO	REMARK
	[01]	*INSULATOR ASSY-DASH PNL LWR*							
	7711005104					1	02'1201	03'0302	
Y	7711005105					1	03'0303	06'0228	
	[03]	*INSULATOR ASSY-ENGINE ROOM*							
	7714105131			M		1	02'1201	06'0228	
	7714105141			A		1	02'1201	06'0228	
	[04]	*NUT*							
	7711906000					6	02'1201	06'0228	M6
	[05]	*INSULATOR-ENGINE ROOM UPR*							
	7715005020					1	02'1201	03'0727	
Y	7715005021					1	03'0728	06'0228	
	[07]	*PAD-COWL SIDE TRIM*							
	7714605000					1	02'1201	06'0228	
	[09]	*PAD-B PLR LWR TRIM*							
	7714805000					1	02'1201	06'0228	
	[10]	*PAD-A PLR TRIM NO2*							
	7714905000					1	02'1201	06'0228	
	[12]	*MAT ASSY-FRT FLOOR*							
	7721007003AAR					1	02'1201	03'0304	
Y	7721007004AAR					1	03'0305	04'0603	
Y	7721007005AAR					1	04'0604	06'0228	
	7721007100AAR				R	1	03'0902	04'0613	
Y	7721007101AAR	RHD			R	1	04'0614	06'0228	
N	7721007111AAR	LHD			L	1	04'0614	06'0228	
	[14]	*TRIM ASSY-DR SCUFF FRT*							
	7726005005AAR		LH			1	02'1201	03'0302	
N	7726005010AAR		LH			1	03'0303	06'0228	SUS
	7727005005AAR		RH			1	02'1201	03'0302	
N	7727005010AAR		RH			1	03'0303	06'0228	SUS
	[15]	*TRIM ASSY-DR SCUFF RR*							
	7726505002AAR		LH			1	02'1201	06'0228	
	7727505002AAR		RH			1	02'1201	06'0228	

7720 FRT FLOOR CARPET

ITC	KEY NO. PART NO	PART NAME OPTION	L/R	T/M	DRV	MODEL 662LA	EFF. DATE FROM	EFF. DATE TO	REMARK
	[16] 7728005000AAR	*TRIM ASSY-COWL SIDE*	LH			1	02'1201	06'0228	
	[17] 7729005400AAR	*TRIM ASSY-COWL SIDE*	RH			1	02'1201	06'0228	
	[18]	*COVER-FUSE BOX*							
	7728505114AAR	IMMO			L	1	03'0515	04'1014	
N	7728505115AAR	IMMO				1	04'1015	06'0228	
	7728505914AAR	IMMO			R	1	03'0515	04'1019	
N	7728505915AAR	IMMO			R	1	04'1020	06'0228	
	[19] 928840600D	*NUT*				1	02'1201	06'0228	M6X1.0
	[20]	*SCREW*							
	938045018D					1	02'1201	06'0228	
	7726905010					4	03'0312	06'0228	CR COATED
	[21]	*INSULATOR ASSY-FRT FLOOR*							
	7723005022					1	02'1201	06'0228	FRT
	7724005104					1	02'1201	06'0228	RR

7730 PILLAR TRIM

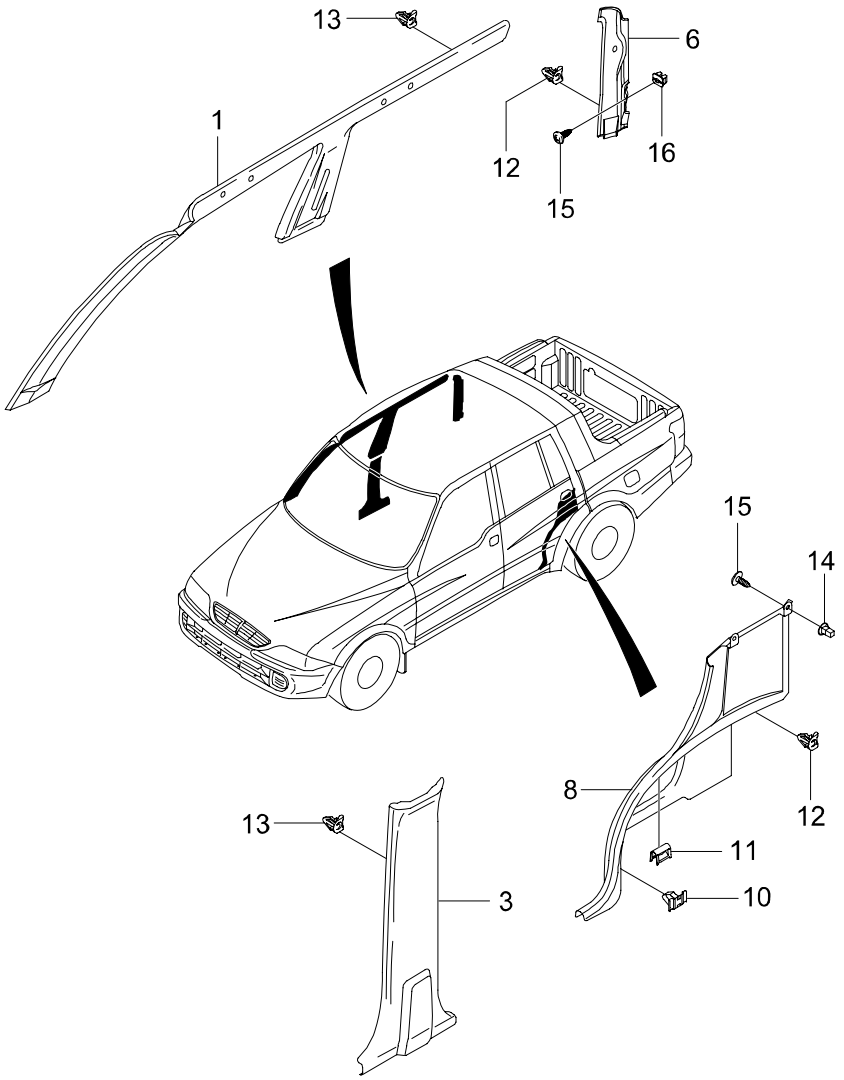

7730 PILLAR TRIM

ITC	KEY NO. PART NO	PART NAME OPTION	L/R	T/M	DRV	MODEL 662LA	EFF. DATE FROM	EFF. DATE TO	REMARK
	[01]	*TRIM ASSY-A PLR*							
	7730105002AAR		LH			1	02'1201	02'1212	
Y	7730105003AAR		LH			1	02'1213	06'0228	
	7730205002AAR		RH			1	02'1201	02'1212	
Y	7730205003AAR		RH			1	02'1213	06'0228	
	[03]	*TRIM ASSY-B PLR LWR*							
	7733505001AAR		LH			1	02'1201	06'0228	
	7734505001AAR		RH			1	02'1201	06'0228	
	[06]	*TRIM ASSY-QTR UPR*							
	7735007000AAR		LH			1	02'1201	03'0120	
Y	7735007001AAR		LH			1	03'0121	06'0228	
	7736007000AAR		RH			1	02'1201	03'0120	
Y	7736007001AAR		RH			1	03'0121	06'0228	
	[08]	*TRIM ASSY-QTR LWR*							
	7748007000AAR		LH			1	02'1201	06'0228	
	7749007000AAR		RH			1	02'1201	06'0228	
	[10]	*CLIP-SPRING*							
	7149705000					2	02'1201	06'0228	
	[11]	*CLIP-STEEL*							
	7726405000					2	02'1201	06'0228	
	[12]	*CLIP-TRIM*							
	7768105000					14	02'1201	06'0228	STEEL CLIP(YELLOW)
	[13]	*CLIP-TRIM*							
	7768105020					46	02'1201	06'0228	STEEL CLIP(BLACK)
	[14]	*GROMMET-SCREW*							
	7731306000					8	02'1201	06'0228	
	[15]	*SCREW*							
	938045018B					8	02'1201	06'0228	M5X18
	[16]	*GROMMET*							
	9491105000					2	02'1201	06'0228	

7740 REAR TRIM

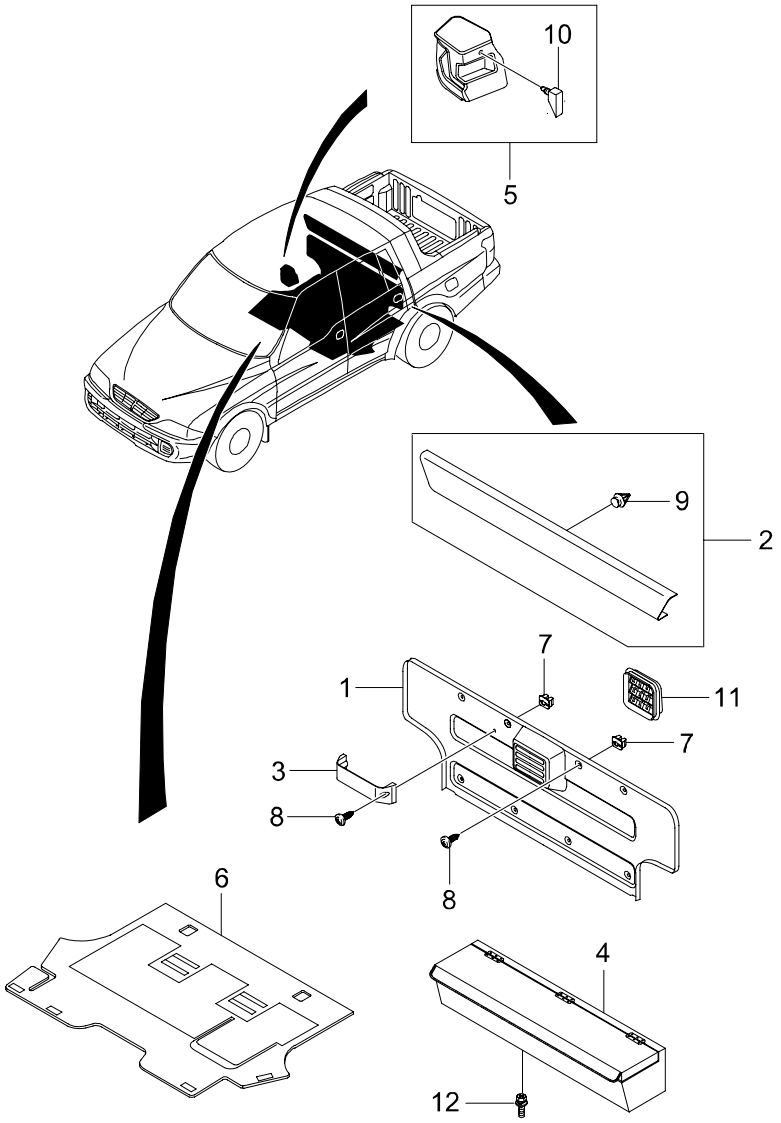

7740 - 01

7740 REAR TRIM

ITC	KEY NO. PART NO	PART NAME OPTION	L/R	T/M	DRV	MODEL 662LA									EFF. DATE FROM	EFF. DATE TO	REMARK
	[01]	*TRIM-BACK PNL LWR*															
	7684007000					1									02'1201	06'0228	
O	7684007100	RR TRAY				1									02'1201	06'0228	
	7684007110				R	1									04'0129	06'0228	ONLY AUSTRALIA
	[02]	*TRIM ASSY-BACK PNL UPR*															
	7683007000AAR					1									02'1201	06'0228	
	[03]	*TRAY-BACK PNL*															
	7784107000AAR					2									02'1201	06'0228	
	[04]	*BOX ASSY-RR*															
	7783007000AAR					1									02'1201	06'0228	
	[05]	*COVER ASSY-JACK*															
	7683307002AAR					1									02'1201	06'0228	
	[06]	*MAT ASSY-RR FLOOR*															
	7681007001AAR	STD(FIXED SEAT)				1									02'1201	06'0228	WITH INSULATOR
	7681007101AAR	DLX(6:4 SPLIT SEAT)				1									02'1201	06'0228	WITH INSULATOR
	7681007110AAR	STD&DLX			R	1									04'0129	06'0228	ONLY AUSTRALIA
	[07]	*GROMMET*															
	9491105000					11									02'1201	06'0228	M5
	[08]	*SCREW*															
	938045012B					11									02'1201	06'0228	M5*12
	[09]	*CLIP-TRIM*															
	7768105000					8									02'1201	06'0228	STEEL CLIP(YELLOW)
	[10]	*KNOB ASSY-COVER*															
	7745208000					1									02'1201	06'0228	
	[11]	*INSERT ASSY-VENTILATION*															
	6810008100					1									02'1201	06'0228	AIR VENT
	[12]	*BOLT*															
	959580647D					3									02'1201	06'0228	M6X1.0X47

7770 SUNSHADE & INSIDE MIRROR

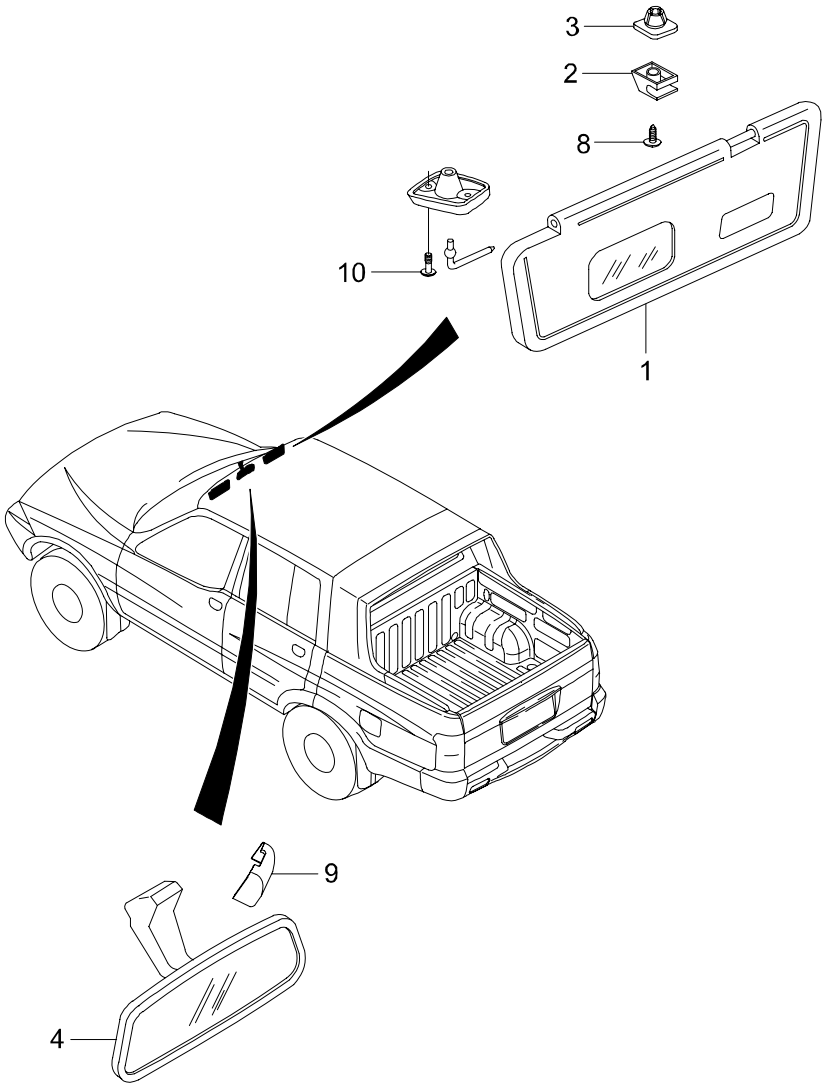

7770 SUNSHADE & INSIDE MIRROR

ITC	KEY NO. PART NO	PART NAME OPTION	L/R	T/M	DRV	MODEL 662LA									EFF. DATE FROM	EFF. DATE TO	REMARK
	[01]	*SUNVISOR ASSY*															
	7611005253AAR		LH			1									05'0203	06'0228	
	7611005012AAR		LH			1									02'1201	06'0228	SINGLE
	7612005250AAR		RH			1									02'1201	06'0228	SINGLE(VANITY MIRROR)
	[02]	*RETAINER-SUNVISOR*															
	7614205001AAR					2									02'1201	04'0603	
Y	7614205002AAR					2									04'0604	06'0228	
	[03]	*GROMMET*															
	7615105000					4									02'1201	06'0228	
	[04]	*MIRROR ASSY-I/S RR VIEW*															
	7647005000	-ECM				1									02'1201	06'0228	
	7647005980	ECM				1									02'1201	06'0228	
	[08]	*SCREW*															
	937045030B					2									02'1201	06'0228	M5X30
	[09]	*COVER-I/S MIRROR*															
	7647405980	ECM				1									02'1201	06'0228	
	[10]	*SCREW*															
	936145016B					4									02'1201	06'0228	M5X0.8

7810 WINDSHIELD WIPER

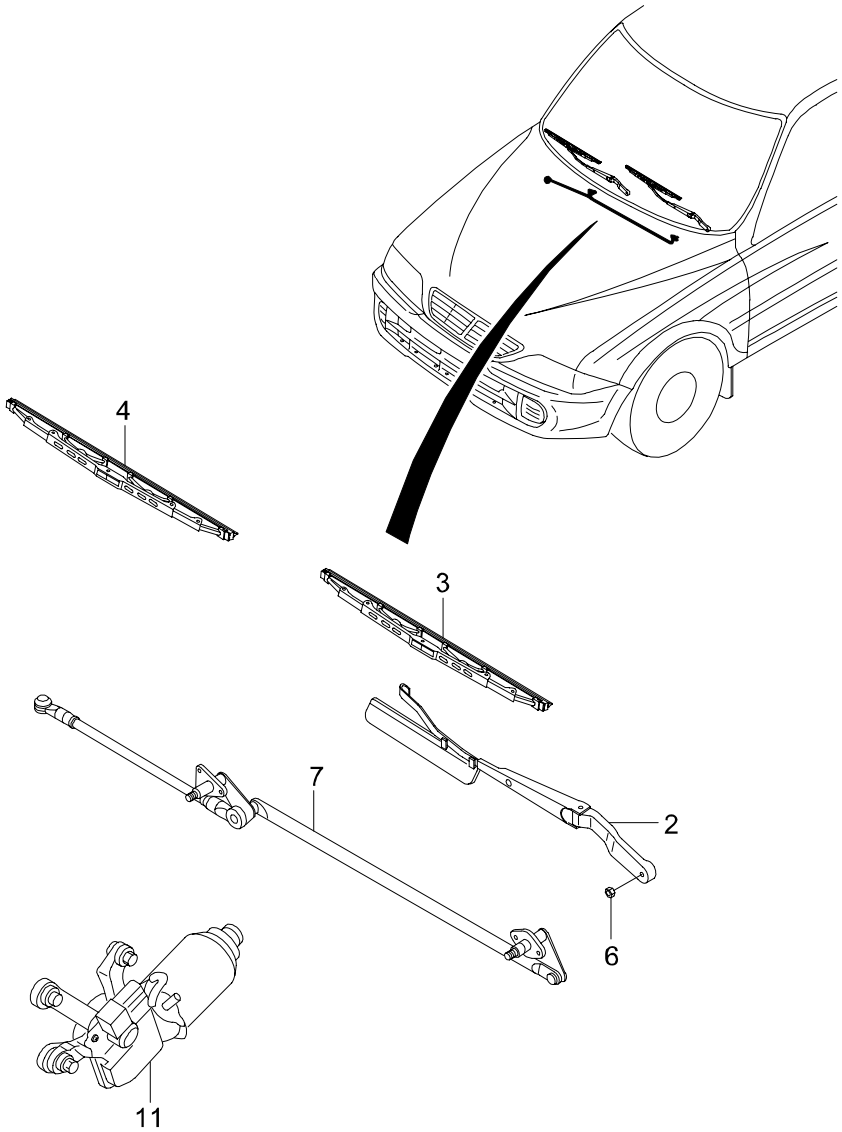

7810 WINDSHIELD WIPER

ITC	KEY NO. PART NO	PART NAME OPTION	L/R	T/M	DRV	MODEL 662LA									EFF. DATE FROM	EFF. DATE TO	REMARK
	[02]	*ARM-W/SHIELD WIPER*															
	7831005000					1									02'1201	06'0228	DRIVER
	7832005000					1									02'1201	06'0228	PASSENGER
	[03]	*BLADE ASSY-W/SHIELD WIPER*															
	7835005000					1									02'1201	04'0201	LENGTH:20 INCH
O	7835005010	DRIVER				1									04'0202	06'0228	LENGTH:20 INCH
	[04]	*BLADE ASSY-W/SHIELD WIPER*															
	7836005000					1									02'1201	04'0201	LENGTH:18 INCH
Y	7836005010	PASSENGER				1									04'0202	06'0228	LENGTH:18 INCH
	[06]	*NUT*															
	7828806001					2									02'1201	06'0228	
	[07]	*LINKAGE-W/SHIELD WIPER*															
	7820005000					1									02'1201	06'0228	
	[11]	*MOTOR ASSY-FRT WIPER*															
	8611005070					1									02'1201	03'0529	WHITE MARKING
O	8611005071				L	1									03'0530	03'0629	WHITE MARKING
O	8611005072				L	1									03'0630	04'0627	WHITE MARKING
O	8611005073				L	1									04'0628	06'0228	

7820 WINDSHIELD WASHER

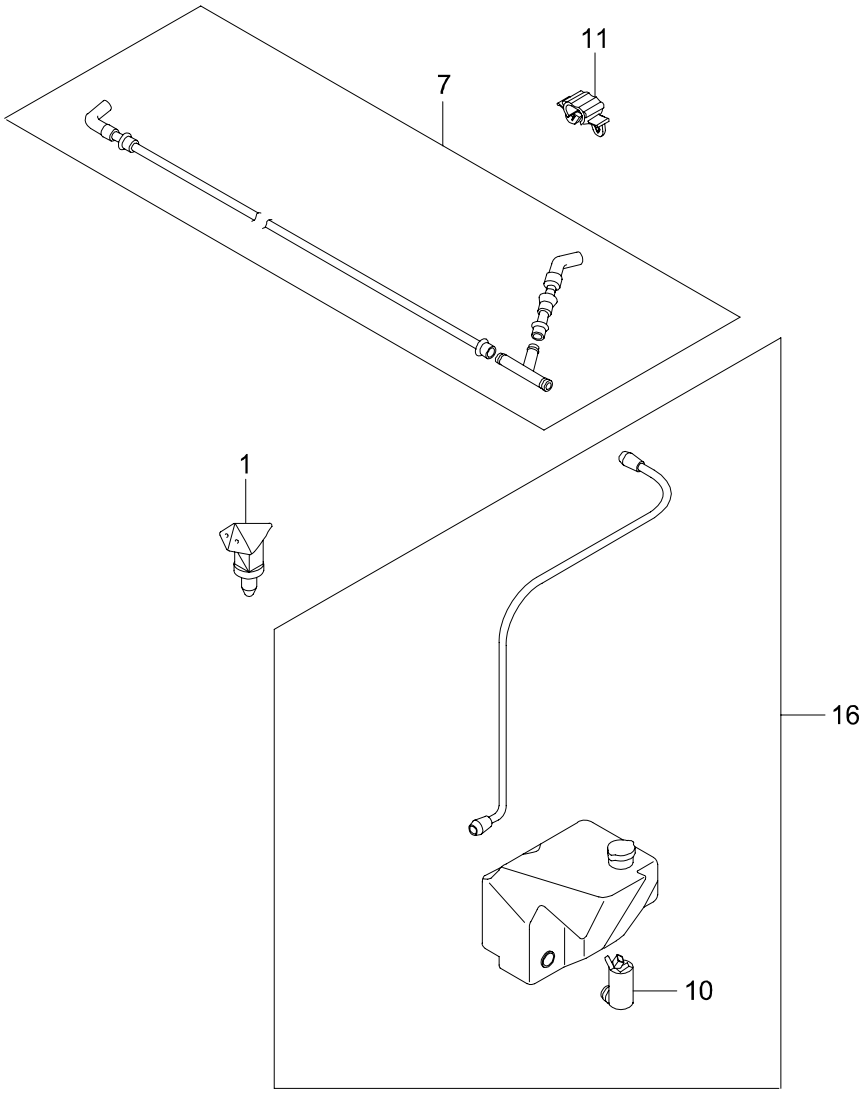

7820 WINDSHIELD WASHER

ITC	KEY NO. PART NO	PART NAME OPTION	L/R	T/M	DRV	MODEL 662LA	EFF. DATE FROM	EFF. DATE TO	REMARK
	[01] 7842005010	*NOZZLE-W/SHIELD WASHER*				2	02'1201	06'0228	
	[07] 7848105001	*HOSE-W/SHIELD WASHER*				1	02'1201	06'0228	
	[10] 8632005000	*MOTOR ASSY-W/SHIELD WASHER FRT*				1	02'1201	06'0228	
	[11] 7162805000	*CLIP*				3	02'1201	06'0228	
	[16] 7848005011	*TANK ASSY-W/SHIELD WASHER RESERVIOR*				1	02'1201	06'0228	WITH MOTOR

7840 GLASS

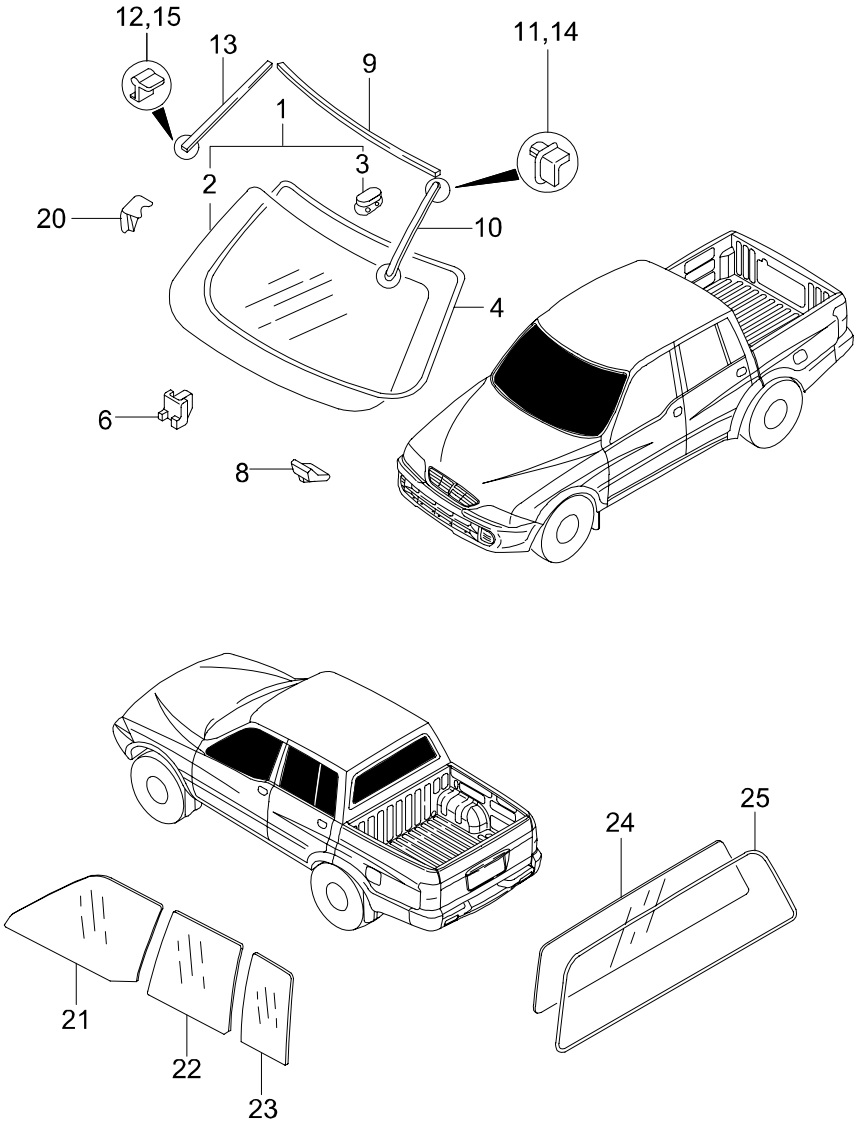

7840 GLASS

ITC	KEY NO. PART NO	PART NAME OPTION	L/R	T/M	DRV	MODEL 662LA	EFF. DATE FROM	EFF. DATE TO	REMARK
	[01]	*GLASS ASSY-W/SHIELD*							
	7911005030	ECM,RAIN SENSING				1	03'0303	06'0228	
	7911005802	ECM				1	02'1201	06'0228	TINTED
	7911005012					1	02'1201	04'0630	TINTED
N	7911005321					1	04'0701	06'0228	TINTED
	7911005310	TINTED,R/S,ECM,GLS ANT				1	03'1226	04'0630	2004M/Y
N	7911005311	TINTED,R/S,ECM,GLS ANT				1	04'0701	06'0228	2004M/Y
	7911005320	TINTED,GLS ANT				1	03'1226	06'0228	2004M/Y
	7911005330	TINTED,ECM,GLS ANT				1	03'1226	04'0630	2004M/Y
N	7911005331	TINTED,ECM,GLS ANT				1	04'0701	06'0228	2004M/Y
	[02]	*GLASS ASSY-W/SHIELD*							
	7911105012					1	02'1201	06'0228	TINTED,NOT AVAILABLE
	[03]	*PLATE-I/S RR VIEW MIRROR*							
	7642205800					1	02'1201	06'0228	
	[04]	*DAM-W/SHIELD UPR*							
	7911205000					1	02'1201	06'0228	
	[06]	*SPACER-W/SHIELD LWR*							
	7912705000					2	02'1201	06'0228	
	[08]	*SPACER ASSY-W/SHIELD LWR*							
	7912005001					2	02'1201	06'0228	
	[09]	*MOULDING-W/SHIELD UPR*							
	7912205000					1	02'1201	06'0228	
	[10]	*MOULDING-W/SHIELD SIDE*							
	7913205001		LH			1	02'1201	06'0228	
	[11]	*CAP-W/SHIELD SIDE MOULDING UPR END*							
	7913405000		LH			1	02'1201	06'0228	
	[12]	*CAP-W/SHIELD SIDE MOULDING LWR END*							
	7913505000		LH			1	02'1201	06'0228	
	[13]	*MOULDING-W/SHIELD SIDE*							
	7914205001		RH			1	02'1201	06'0228	
	[14]	*CAP-W/SHIELD SIDE MOULDING UPR END*							
	7914405000		RH			1	02'1201	06'0228	

7840 GLASS

ITC	KEY NO. / PART NO	PART NAME / OPTION	L/R	T/M	DRV	MODEL 662LA	EFF. DATE FROM	EFF. DATE TO	REMARK
	[15]	*CAP-W/SHIELD SIDE MOULDING LWR END*							
	7914505000		RH			1	02'1201	06'0228	
	[20]	*CLIP*							
	7913605001					3	02'1201	06'0228	
	[21]	*GLASS-FRT DR DROP*							
	7231105103	TINTED	LH			1	02'1201	06'0228	
	7232105103	TINTED	RH			1	02'1201	06'0228	
	[22]	*GLASS-RR DR DROP*							
	7331105103	TINTED	LH			1	02'1201	06'0228	
	7332105103	TINTED	RH			1	02'1201	06'0228	
	[23]	*GLASS-RR DR FIXED*							
	7331705103	TINTED	LH			1	02'1201	06'0228	
	7332705003	TINTED	RH			1	02'1201	06'0228	
	[24]	*GLASS ASSY-RR TINTED*							
	7932007010	TINTED				1	02'1201	03'0302	W/OUT W/STRIP
N	7932007100	TINTED				1	03'0303	06'0228	ADD HOT WIRE
	[25]	*W/STRIP ASSY-RR GLASS*							
	7932107000					1	02'1201	06'0228	

7850 OUTSIDE MIRROR

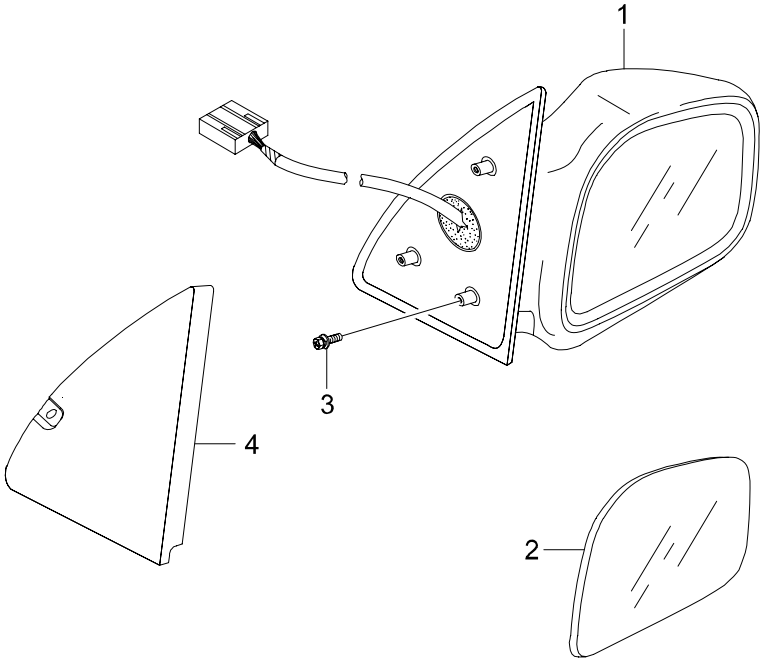

7850 OUTSIDE MIRROR

ITC	KEY NO. PART NO	PART NAME OPTION	L/R	T/M	DRV	MODEL 662LA									EFF. DATE FROM	EFF. DATE TO	REMARK
	[01]	*MIRROR ASSY-O/S*															
	7898005041WAA	ELEC,HEATER	LH			1									02'1201	06'0228	BASE PLATE:BODY COLOR
	7898005041LAK	ELEC,HEATER	LH			1									02'1201	06'0228	BASE PLATE:BODY COLOR
	7898005041SAE	ELEC,HEATER	LH			1									02'1201	06'0228	BASE PLATE:BODY COLOR
	7898005041RGA	ELEC,HEATER	LH			1									02'1201	06'0228	BASE PLATE:BODY COLOR
	7898005041BAG	ELEC,HEATER	LH			1									02'1201	06'0228	BASE PLATE:BODY COLOR
	7898005041GAJ	ELEC,HEATER	LH			1									02'1201	06'0228	BASE PLATE:BODY COLOR
	7899005041WAA	ELEC,HEATER	RH			1									02'1201	06'0228	BASE PLATE:BODY COLOR
	7899005041LAK	ELEC,HEATER	RH			1									02'1201	06'0228	BASE PLATE:BODY COLOR
	7899005041SAE	ELEC,HEATER	RH			1									02'1201	06'0228	BASE PLATE:BODY COLOR
	7899005041RGA	ELEC,HEATER	RH			1									02'1201	06'0228	BASE PLATE:BODY COLOR
	7899005041BAG	ELEC,HEATER	RH			1									02'1201	06'0228	BASE PLATE:BODY COLOR
	7899005041GAJ	ELEC,HEATER	RH			1									02'1201	06'0228	BASE PLATE:BODY COLOR
	7891005060WAA	ELEC	LH			1									02'1201	06'0228	
	7891005060LAK	ELEC	LH			1									02'1201	06'0228	SPACE BLACK
	7891005060SAE	ELEC	LH			1									02'1201	06'0228	TECHNO SILVER
	7891005060RGA	ELEC	LH			1									02'1201	06'0228	RED ROCK
	7891005060BAG	ELEC	LH			1									02'1201	06'0228	METRO BLUE
	7891005060GAJ	ELEC	LH			1									02'1201	06'0228	SAFARI GREEN
	7891005930BAG	-HEATED	LH		R	1									03'0925	06'0228	
	7891005930GAJ	-HEATED	LH		R	1									03'0929	06'0228	
	7891005930LAK	-HEATED	LH		R	1									03'0915	06'0228	
	7891005930RGA	-HEATED	LH		R	1									03'0929	06'0228	
	7891005930WAA	-HEATED	LH		R	1									03'0929	06'0228	
	7891005930SAB	-HEATED,-SPK	LH		R	1									04'0129	06'0228	
	7898005061WAA	ELEC,HEATER	LH			1									02'1201	06'0228	BASE PLATE:BODY COLOR
	7898005061LAK	ELEC,HEATER	LH			1									02'1201	06'0228	BASE PLATE:BODY COLOR
	7898005061SAE	ELEC,HEATER	LH			1									02'1201	06'0228	BASE PLATE:BODY COLOR
	7898005061RGA	ELEC,HEATER	LH			1									02'1201	06'0228	BASE PLATE:BODY COLOR
	7898005061BAG	ELEC,HEATER	LH			1									02'1201	06'0228	BASE PLATE:BODY COLOR
	7898005061GAJ	ELEC,HEATER	LH			1									02'1201	06'0228	BASE PLATE:BODY COLOR
	7898005931WAA	HEAT	LH		R	1									02'1201	06'0228	BASE PLATE:BODY COLOR
	7898005931LAK	HEAT	LH		R	1									02'1201	06'0228	BASE PLATE:BODY COLOR
	7898005931SAE	HEAT	LH		R	1									02'1201	06'0228	BASE PLATE:BODY COLOR
	7898005931SAB	HEAT	LH		R	1									02'1201	06'0228	BASE PLATE:BODY COLOR
	7898005931RGA	HEAT	LH		R	1									02'1201	06'0228	BASE PLATE:BODY COLOR

7850 OUTSIDE MIRROR

ITC	KEY NO. / PART NO	PART NAME / OPTION	L/R	T/M	DRV	MODEL 662LA	EFF. DATE FROM	EFF. DATE TO	REMARK
	7898005931BAG	HEAT				LH R 1	02'1201	06'0228	BASE PLATE:BODY COLOR
	7898005931GAJ	HEAT	LH		R	1	02'1201	06'0228	BASE PLATE:BODY COLOR

7850 OUTSIDE MIRROR

ITC	KEY NO. PART NO	PART NAME OPTION	L/R	T/M	DRV	MODEL 662LA									EFF. DATE FROM	EFF. DATE TO	REMARK
	[01]	*MIRROR ASSY-O/S*															
	7892005930LAK	-HEATED	RH		R	1									03'0915	06'0228	
	7892005060WAA	ELEC	RH			1									02'1201	06'0228	
	7892005060LAK	ELEC	RH			1									02'1201	06'0228	
	7892005060SAE	ELEC	RH			1									02'1201	06'0228	
	7892005060RGA	ELEC	RH			1									02'1201	06'0228	
	7892005060BAG	ELEC	RH			1									02'1201	06'0228	
	7892005060GAJ	ELEC	RH			1									02'1201	06'0228	
	7899005061WAA	ELEC,HEATER	RH			1									02'1201	06'0228	
	7899005061LAK	ELEC,HEATER	RH			1									02'1201	06'0228	SPACE BLACK
	7899005061SAE	ELEC,HEATER	RH			1									02'1201	06'0228	TECHNO SILVER
	7899005061RGA	ELEC,HEATER	RH			1									02'1201	06'0228	RED ROCK
	7899005061BAG	ELEC,HEATER	RH			1									02'1201	06'0228	METRO BLUE
	7899005061GAJ	ELEC,HEATER	RH			1									02'1201	06'0228	SAFARI GREEN
	7892005930BAG	-HEATED	RH		R	1									03'0925	06'0228	
	7892005930GAJ	-HEATED	RH		R	1									03'0929	06'0228	
	7892005930RGA	-HEATED	RH		R	1									03'0929	06'0228	
	7892005930WAA	-HT,-SPK	RH		R	1									03'0929	06'0228	
	7892005930SAB	-HTD,-SPK	RH		R	1									04'0129	06'0228	BASE PLATE:BODY COLOR
	7899005931WAA	HEAT	RH		R	1									02'1201	06'0228	BASE PLATE:BODY COLOR
	7899005931LAK	HEAT	RH		R	1									02'1201	06'0228	BASE PLATE:BODY COLOR
	7899005931SAE	HEAT	RH		R	1									02'1201	06'0228	BASE PLATE:BODY COLOR
	7899005931SAB	HEAT	RH		R	1									02'1201	06'0228	BASE PLATE:BODY COLOR
	7899005931RGA	HEAT	RH		R	1									02'1201	06'0228	BASE PLATE:BODY COLOR
	7899005931BAG	HEAT	RH		R	1									02'1201	06'0228	BASE PLATE:BODY COLOR
	7899005931GAJ	HEAT	RH		R	1									02'1201	06'0228	BASE PLATE:BODY COLOR
	[02]	*HOLDER ASSY-GLASS*															
	7898405010	-HT,-SPK,AUS,PJ	LH			1									02'1201	02'1130	CURVED SURFACE,NON LETTER
N	7898405020	-HT,-SPK,AUS,DONG-JIN(VANDOR)	LH		R	1									02'1201	06'0228	CURVED SURFACE,NON LETTER
	7898405150	GCC,PJ	LH			1									02'1201	06'0228	CURVED SURFACE,ARAB LETTER
N	7898405160	GCC,DONG-JIN(VANDOR)	LH			1									02'1201	06'0228	CURVED SURFACE,ARAB LETTER
	7898505010	+HT,-SPK,AUS,PJ	LH		R	1									02'1201	02'1130	CURVED SURFACE,NON LETTER
N	7898505020	+HT,-SPK,AUS,DONG-JIN(VANDOR)	LH		R	1									02'1201	06'0228	CURVED SURFACE,NON LETTER
	7899405010	PJ	RH			1									02'1201	06'0228	CURVED SURFACE,NON LETTER
N	7899405020	DONG-JIN(VANDOR)	RH			1									02'1201	06'0228	CURVED SURFACE,NON LETTER

7850 OUTSIDE MIRROR

ITC	KEY NO. PART NO	PART NAME OPTION	L/R	T/M	DRV	MODEL 662LA	EFF. DATE FROM	EFF. DATE TO	REMARK
	7899405150	GCC,PJ				RH 1	02'1201	06'0228	CURVED SURFACE,ARAB LETTER
N	7899405160	GCC,DONG-JIN(VANDOR)	RH			1	02'1201	06'0228	CURVED SURFACE,ARAB LETTER
	7899405950	-HEAT,AUS,PJ	RH		R	1	02'1201	06'0228	PLATE SURFACE,NON LETTER
N	7899405960	-HEAT,AUS,DONG-JIN(VANDOR)	RH		R	1	02'1201	06'0228	PLATE SURFACE,NON LETTER
	7899505950	HEAT,AUS,PJ	RH		R	1	02'1201	06'0228	PLATE SURFACE,NON LETTER
N	7899505960	HEAT,AUS,DONG-JIN(VANDOR)	RH		R	1	02'1201	06'0228	PLATE SURFACE,NON LETTER
	[03]	*SCREW*							
	982740516D					6	02'1201	06'0228	M5X0.8X16
	[04]	*COVER-INR*							
	7893005013		LH			1	02'1201	06'0228	ELECTICAL,HEATER
	7894005013		RH			1	02'1201	06'0228	ELECTICAL,HEATER

7870 FRONT BUMPER

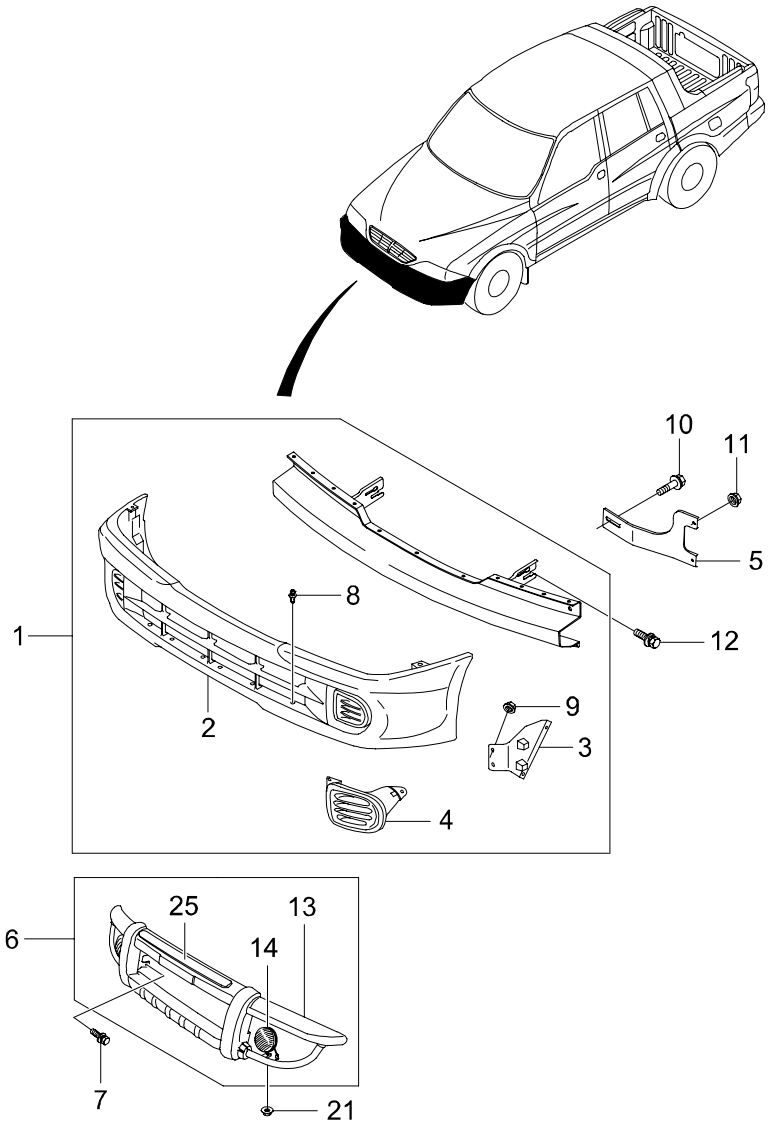

7870 FRONT BUMPER

ITC	KEY NO. PART NO	PART NAME OPTION	L/R	T/M	DRV	MODEL 662LA									EFF. DATE FROM	EFF. DATE TO	REMARK
	[01]	*BUMPER ASSY-FRT*															
	7871005800	-N/BAR,-FOG LAMP				1									02'1201	06'0228	W/OUT PAINT
	7871005110	N/BAR,FOG LAMP				1									02'1201	06'0228	W/OUT PAINT
	[02]	*FACIA ASSY-FRT BUMPER*															
	7871205800					1									02'1201	06'0228	W/OUT PAINT
	[03]	*BRKT-FRT BUMPER SIDE MTG*															
	7872205800		LH			1									02'1201	06'0228	
	7872305800		RH			1									02'1201	06'0228	
	[04]	*GRILLE-FOG LAMP*															
	8320105600		LH			1									02'1201	06'0228	W/OUT PAINT
	8320205600		RH			1									02'1201	06'0228	W/OUT PAINT
	[05]	*BRKT-FRT BUMPER SIDE SUPT*															
	7876105800		LH			1									02'1201	06'0228	
	7876205800		RH			1									02'1201	06'0228	
	[06]	*NUDGE BAR ASSY-FRT*															
	7877005815WAA					1									02'1201	06'0228	W/ FOG LAMP
	7877005815RGA					1									02'1201	06'0228	W/ FOG LAMP
	7877005815GAJ					1									02'1201	06'0228	W/ FOG LAMP
	7877005815BAG					1									02'1201	06'0228	W/ FOG LAMP
	7877005815LAK					1									02'1201	06'0228	W/ FOG LAMP
	7877005815SAE					1									02'1201	03'0901	W/ FOG LAMP
N	7877005815SAB					1									03'0902	06'0228	W/ FOG LAMP
	[07]	*BOLT*															
	959170830M					4									02'1201	06'0228	FOR NUDGE BAR MTG
	[08]	*SCRIVET*															
	7941605000					28									02'1201	06'0228	
	[09]	*NUT*															
	928840600D					4									02'1201	06'0228	M6X1.0
	[10]	*BOLT*															
	959170625D					4									02'1201	06'0228	M6X1.0X25
	[11]	*NUT*															
	9307406007					4									02'1201	06'0228	

7870 FRONT BUMPER

ITC	KEY NO. PART NO	PART NAME OPTION	L/R	T/M	DRV	MODEL 662LA									EFF. DATE FROM	EFF. DATE TO	REMARK
	[12]	*BOLT*															
	7870805002					4									02'1201	06'0228	M16X30(FOR BUMPER MTG)
	[13]	*NUDGE BAR ASSY-FRT*															
	78770058A0BAG					1									02'0901	06'0228	W/O FOG LAMP
	78770058A0GAJ					1									02'0901	06'0228	W/O FOG LAMP
	78770058A0LAK					1									02'0901	06'0228	W/O FOG LAMP
	78770058A0RGA					1									02'0901	06'0228	W/O FOG LAMP
	78770058A0SAE					1									02'0901	03'0901	W/O FOG LAMP
N	78770058A0SAB					1									03'0902	06'0228	W/O FOG LAMP
	78770058A0WAA					1									02'0901	06'0228	W/O FOG LAMP
	[14]	*LAMP ASSY-FOG*															
	8320105701					2									02'0901	06'0228	WHITE CLEAR
	[21]	*NUT*															
	9307408001					2									02'1201	06'0228	
	[25]	*MOLDING-NUDGE BAR*															
	7877205811					1									02'1201	06'0228	

7880 REAR BUMPER

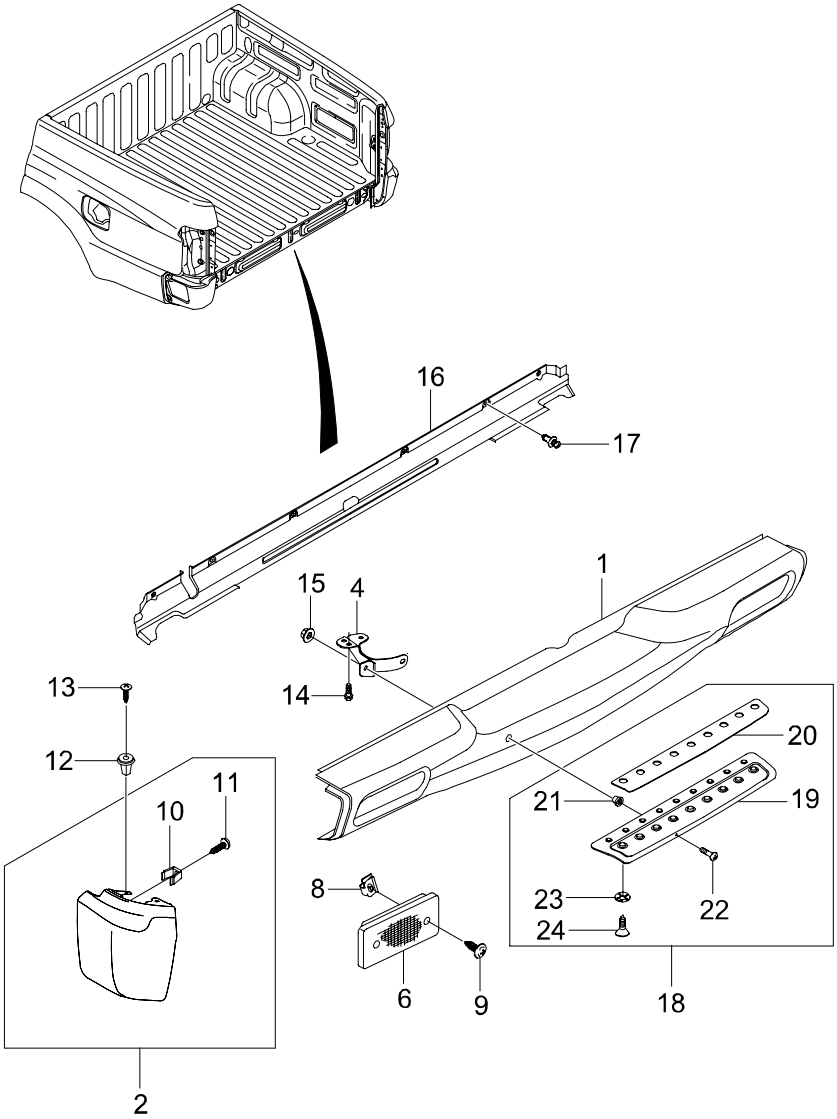

7880 REAR BUMPER

ITC	KEY NO. PART NO	PART NAME OPTION	L/R	T/M	DRV	MODEL 662LA									EFF. DATE FROM	EFF. DATE TO	REMARK
	[01]	*FACIA ASSY-RR BUMPER CTR*															
	7881007AS0					1									02'1201	06'0228	STEEL,NON PAINTED,
	[02]	*FACIA ASSY-RR BUMPER SIDE*															
	7885007000		LH			1									02'1201	06'0228	PLASTICS,W/OUT PAINT
	7886007000		RH			1									02'1201	06'0228	PLASTICS,W/OUT PAINT
	[04]	*BRKT-RR BUMPER MTG*															
	7883207000		LH			1									02'1201	06'0228	
	7884207000		RH			1									02'1201	06'0228	
	[06]	*LAMP ASSY-REFLEX REFLECTOR*															
	8390105100		LH			1									02'1201	06'0228	REFLEX(W/OUT BULB)
	8390205100		RH			1									02'1201	06'0228	REFLEX(W/OUT BULB)
	[08]	*NUT*															
	9271440147					4									02'1201	06'0228	M4
	[09]	*SCREW*															
	937044020D					4									02'1201	06'0228	M4X20
	[10]	*CLIP-BUMPER MTG*															
	6618853034					4									02'1201	06'0228	
	[11]	*SCREW*															
	938044012B					4									02'1201	06'0228	M4X12
	[12]	*GROMMET*															
	8251205000					4									02'1201	06'0228	
	[13]	*SCREW*															
	984145016B					4									02'1201	06'0228	M5X16
	[14]	*BOLT*															
	958371030D					6									02'1201	06'0228	M10X1.25X30
	[15]	*NUT*															
	7885505000					4									02'1201	06'0228	M12X1.75(BUMPER MTG)
	[16]	*COVER-CTR FASCIA*															
	7887007000					1									02'1201	06'0228	

7880 REAR BUMPER

ITC	KEY NO. PART NO	PART NAME OPTION	L/R	T/M	DRV	MODEL 662LA	EFF. DATE FROM	EFF. DATE TO	REMARK
	[17] 7971705000	*SCRIVET*				6	02'1201	06'0228	
	[18] 7888007000	*STEP ASSY-RR BUMPER*				1	02'1201	06'0228	
	[19] 7888107000	*STEP-RR BUMPER*				1	02'1201	06'0228	NOT AVAILABLE,SUPPLY BY KIT7888007000
	[20] 7888207000	*MOULDING-RR BUMPER STEP BRIGHT*				1	02'1201	06'0228	NOT AVAILABLE,SUPPLY BY KIT7888007000
	[21] 4869606000	*NUT*				5	02'1201	06'0228	M5X0.8
	[22] 936145016D	*SCREW*				5	02'1201	06'0228	M5X0.8X16,SUS
	[23] 9910160000	*WASHER-LOCK*				7	02'1201	06'0228	M6,
	[24] 9377540101	*T/SCREW-COUNTER HEAD*				3	02'1201	06'0228	M4X10(FIXING FRONT 3 BOSS)

7910 RADIATOR GRILLE

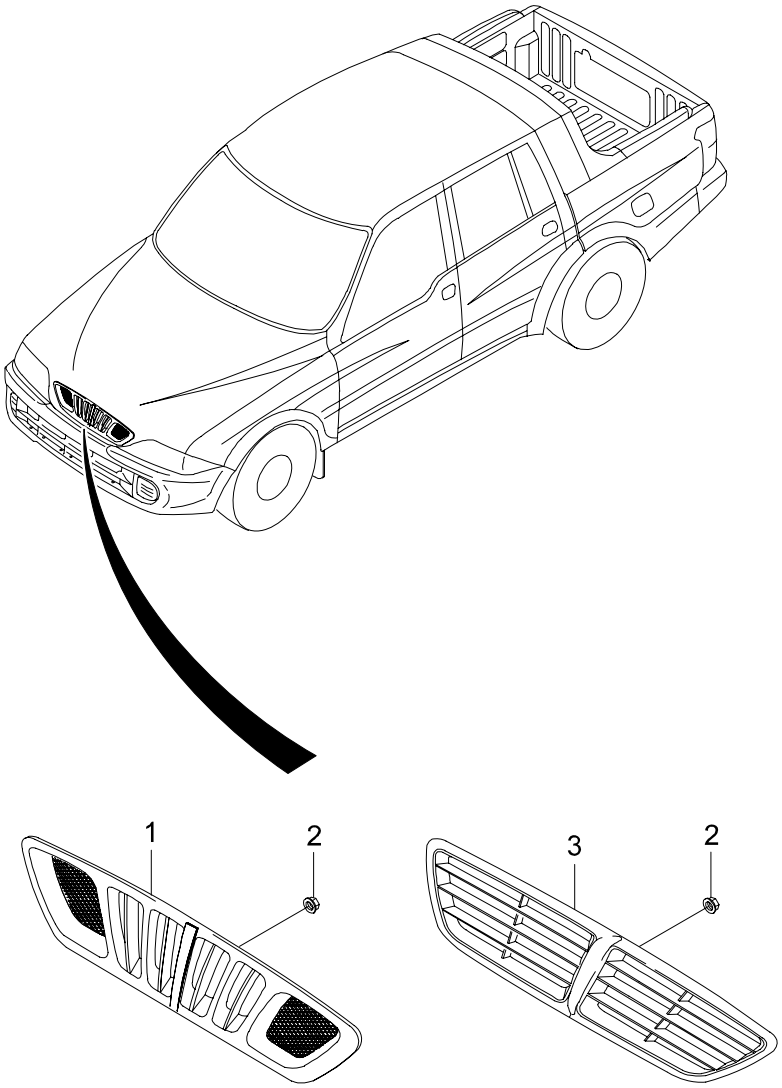

7910 RADIATOR GRILLE

ITC	KEY NO. PART NO	PART NAME OPTION	L/R	T/M	DRV	MODEL 662LA									EFF. DATE FROM	EFF. DATE TO	REMARK
	[01]	*GRILLE ASSY-RADIATOR*															
	7943005831SAD					1									02'1201	06'0228	CHROME COATED,DAEWOO
	7943007010					1									03'1112	06'0228	
	[02]	*NUT*															
	928840600D					9									02'1201	06'0228	M6X1.0

7920 MUD GUARD & UNDER TRIM

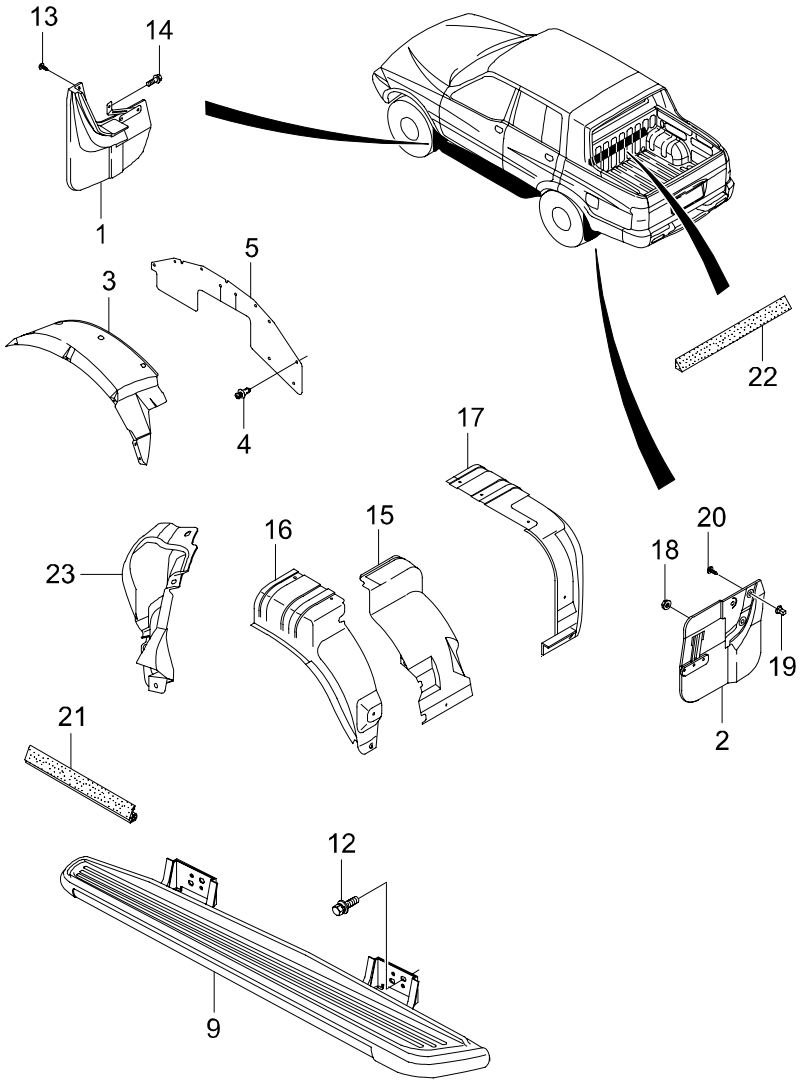

7920 MUD GUARD & UNDER TRIM

ITC	KEY NO. PART NO	PART NAME OPTION	L/R	T/M	DRV	MODEL 662LA									EFF. DATE FROM	EFF. DATE TO	REMARK
	[01]	*MUD GUARD ASSY-FRT*															
	7971005800		LH			1									02'1201	06'0228	
	7972005800		RH			1									02'1201	06'0228	
	[02]	*MUD GUARD ASSY-RR*															
	7973007000		LH			1									02'1201	05'0102	
Y	7973007001		LH			1									05'0103	06'0228	
N	7973007011	AUS. ONLY (2WD)	LH			1									04'0913	06'0228	
	7974007000		RH			1									02'1201	05'0102	
Y	7974007001		RH			1									05'0103	06'0228	
N	7974007011	AUS. ONLY (2WD)	RH			1									04'0913	06'0228	
	[03]	*GUARD-FRT WHEEL*															
	7971605002		LH			1									02'1201	06'0228	
	7972605002		RH			1									02'1201	06'0228	
	[04]	*SCRIVET*															
	7971705000					24									02'1201	06'0228	
	[05]	*GUARD-SPLASH*															
	7973605003					2									02'1201	06'0228	
	[09]	*STEP ASSY-SIDE*															
	7975005032LAD	SIDE STEP	LH			1									02'1201	06'0228	
	7976005032LAD	SIDE STEP	RH			1									02'1201	06'0228	
	[12]	*BOLT*															
	959371230M					8									02'1201	06'0228	M12X1.25X30
	[13]	*SCREW*															
	984144020D					4									02'1201	06'0228	M4X20
	[14]	*SCREW*															
	982740616D					2									02'1201	06'0228	M6X1.0X16
	[15]	*GUARD-RR WHEEL INR*															
	7977607000		LH			1									02'1201	06'0228	
	[16]	*GUARD-RR WHEEL OTR*															
	7975607001		LH			1									02'1201	06'0228	
	[17]	*GUARD-RR WHEEL*															
	7976607000		RH			1									02'1201	06'0228	

7920 MUD GUARD & UNDER TRIM

ITC	KEY NO. PART NO	PART NAME OPTION	L/R	T/M	DRV	MODEL 662LA									EFF. DATE FROM	EFF. DATE TO	REMARK
	[18]	*NUT*															
	928840600D					2									02'1201	06'0228	M6X1.0
	[19]	*GROMMET-SCREW*															
	7731306000					6									02'1201	06'0228	
	[20]	*SCREW*															
	984145016B					6									02'1201	06'0228	M5X16
	[21]	*W/STRIP-CAP WHEEL HOUSE*															
	7973707000					2									02'1201	03'0422	LENGTH=480mm
O	7973707002					2									03'0423	06'0228	LENGTH=290MM
	[22]	*PAD-CAP COVER SPONGE*															
	7974607000					1									02'1201	06'0228	
	[23]	*COVER-RR WHEEL HOUSE FRT*															
	7978607000		LH			1									02'1201	06'0228	
	7979607000		RH			1									02'1201	06'0228	

7930 SIDE BODY MOULDING

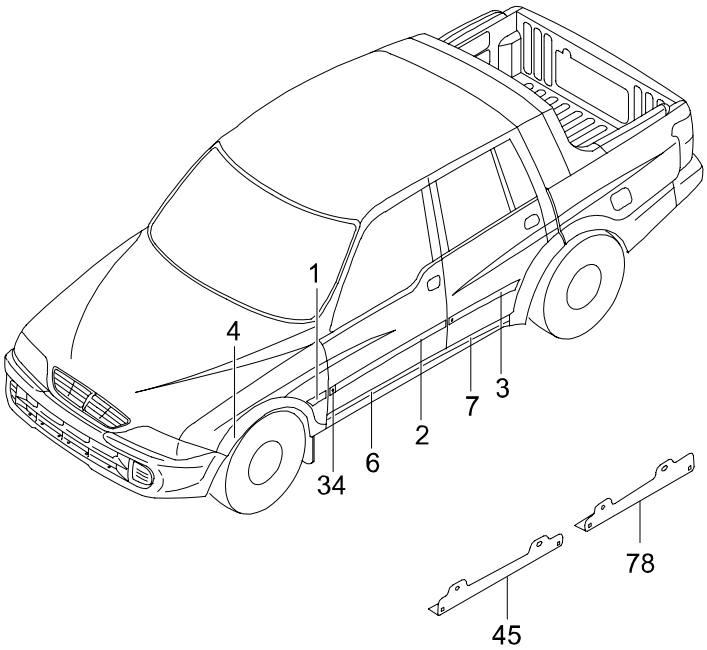

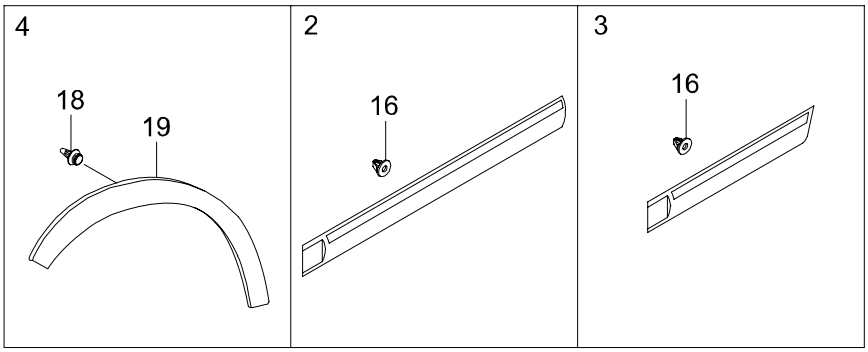

7930 SIDE BODY MOULDING

ITC	KEY NO. PART NO	PART NAME OPTION	L/R	T/M	DRV	MODEL 662LA	EFF. DATE FROM	EFF. DATE TO	REMARK
	[01]	*MOULDING-FENDER*							
	7951105800	NARROW GARNISH	LH			1	02'1201	06'0228	W/OUT PAINT
	7952105800	NARROW GARNISH	RH			1	02'1201	06'0228	W/OUT PAINT
	[02]	*MOULDING-FRT DR*							
	7951605800	NARROW TYPE	LH			1	02'1201	06'0228	W/OUT PAINT
	7952605800	NARROW TYPE	RH			1	02'1201	06'0228	W/OUT PAINT
	7951605810BAG	WIDE TYPE	LH			1	03'1226	06'0228	2004M/Y
	7951605810GAJ	WIDE TYPE	LH			1	03'1226	06'0228	2004M/Y
	7951605810LAK	WIDE TYPE	LH			1	03'1226	06'0228	2004M/Y
	7951605810RGA	WIDE TYPE	LH			1	03'1226	06'0228	2004M/Y
	7951605810SAB	WIDE TYPE	LH			1	03'1226	06'0228	2004M/Y
	7951605810WAA	WIDE TYPE	LH			1	03'1226	06'0228	2004M/Y
	7952605810BAG	WIDE TYPE	RH			1	03'1226	06'0228	2004M/Y
	7952605810GAJ	WIDE TYPE	RH			1	03'1226	06'0228	2004M/Y
	7952605810LAK	WIDE TYPE	RH			1	03'1226	06'0228	2004M/Y
	7952605810RGA	WIDE TYPE	RH			1	03'1226	06'0228	2004M/Y
	7952605810SAB	WIDE TYPE	RH			1	03'1226	06'0228	2004M/Y
	7952605810WAA	WIDE TYPE	RH			1	03'1226	06'0228	2004M/Y
	[03]	*MOULDING-RR DR*							
	7953605800	NARROW TYPE	LH			1	02'1201	06'0228	W/OUT PAINT
	7954605800	NARROW TYPE	RH			1	02'1201	06'0228	W/OUT PAINT
	7953605810BAG	WIDE TYPE	LH			1	03'1226	06'0228	2004M/Y
	7953605810GAJ	WIDE TYPE	LH			1	03'1226	06'0228	2004M/Y
	7953605810LAK	WIDE TYPE	LH			1	03'1226	06'0228	2004M/Y
	7953605810RGA	WIDE TYPE	LH			1	03'1226	06'0228	2004M/Y
	7953605810SAB	WIDE TYPE	LH			1	03'1226	06'0228	2004M/Y
	7953605810WAA	WIDE TYPE	LH			1	03'1226	06'0228	2004M/Y
	7954605810BAG	WIDE TYPE	RH			1	03'1226	06'0228	2004M/Y
	7954605810GAJ	WIDE TYPE	RH			1	03'1226	06'0228	2004M/Y
	7954605810LAK	WIDE TYPE	RH			1	03'1226	06'0228	2004M/Y
	7954605810RGA	WIDE TYPE	RH			1	03'1226	06'0228	2004M/Y
	7954605810SAB	WIDE TYPE	RH			1	03'1226	06'0228	2004M/Y
	7954605810WAA	WIDE TYPE	RH			1	03'1226	06'0228	2004M/Y
	[04]	*MOULDING-WHEEL ARCH FRT*							
	7953105800	NARROW TYPE	LH			1	02'1201	06'0228	W/OUT PAINT
	7954105800	NARROW TYPE	RH			1	02'1201	06'0228	W/OUT PAINT

7930 SIDE BODY MOULDING

ITC	KEY NO. PART NO	PART NAME OPTION	L/R	T/M	DRV	MODEL 662LA									EFF. DATE FROM	EFF. DATE TO	REMARK
	[04]	*MOULDING-WHEEL ARCH FRT*															
	7953105811LAK	WIDE TYPE	LH			1									03'1226	06'0228	2004M/Y
	7953105811WAA	WIDE TYPE	LH			1									03'1226	06'0228	2004M/Y
	7953105811SAB	WIDE TYPE	LH			1									03'1226	06'0228	2004M/Y
	7953105811GAJ	WIDE TYPE	LH			1									03'1226	06'0228	2004M/Y
	7953105811BAG	WIDE TYPE	LH			1									03'1226	06'0228	2004M/Y
	7953105811RGA	WIDE TYPE	LH			1									03'1226	06'0228	2004M/Y
	7954105811LAK	WIDE TYPE	RH			1									03'1226	06'0228	2004M/Y
	7954105811WAA	WIDE TYPE	RH			1									03'1226	06'0228	2004M/Y
	7954105811SAB	WIDE TYPE	RH			1									03'1226	06'0228	2004M/Y
	7954105811GAJ	WIDE TYPE	RH			1									03'1226	06'0228	2004M/Y
	7954105811BAG	WIDE TYPE	RH			1									03'1226	06'0228	2004M/Y
	7954105811RGA	WIDE TYPE	RH			1									03'1226	06'0228	2004M/Y
	[06]	*GARNISH-SIDE SILL FRT*															
	7955605801		LH			1									02'1201	06'0228	W/OUT PAINT
	7956605801		RH			1									02'1201	06'0228	W/OUT PAINT
	[07]	*GARNISH-SIDE SILL RR*															
	7957607000		LH			1									02'1201	06'0228	W/OUT PAINT
	7958607000		RH			1									02'1201	06'0228	W/OUT PAINT
	[16]	*CLIP-DR GARNISH MTG*															
	7951905800					14									02'1201	06'0228	FIXING DOOR MOLDING
	[18]	*CLIP*															
	7956706000					12									02'1201	06'0228	FIXING W/ARCH MOLDING
	[19]	*SEAL-WHEEL ARCH MOULDING UPR*															
	79589051A0AAL					1									02'1201	06'0228	LIGHT SHADE
	79589051A0LM					1									02'1201	06'0228	DARK SHADE
	[34]	*CLIP*															
	7953905800					4									02'1201	06'0228	W/OUT PAINT
	[45]	*BRKT-FRT SIDE SILL MTG*															
	7955905800					2									02'1201	06'0228	
	[78]	*BRKT-RR SIDE SILL*															
	7957905800					2									02'1201	06'0228	

7950 EMBLEM & LETTERING

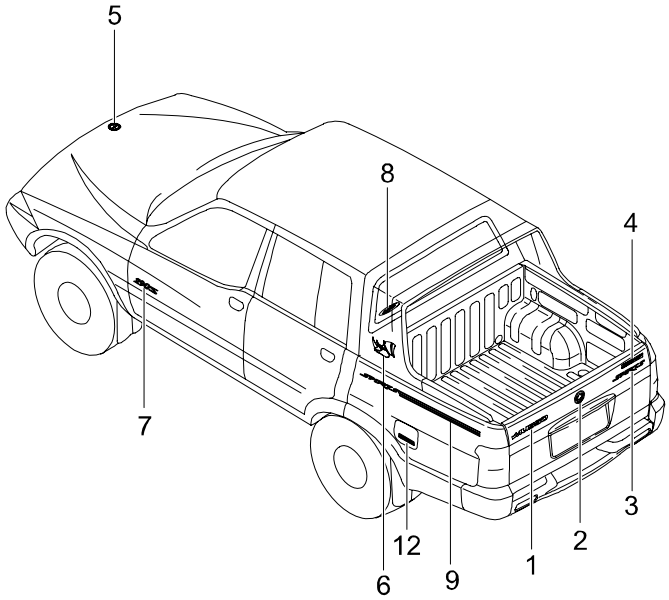

1 MUSSO	2	3 SPORTS	4 PICK-UP
5	6	7 290S	8 ABS
12 DIESEL	9 SPORTS		

7950 EMBLEM & LETTERING

ITC	KEY NO. / PART NO	PART NAME / OPTION	L/R	T/M	DRV	MODEL 662LA	EFF. DATE FROM	EFF. DATE TO	REMARK
	[01]	*EMBLEM-MUSSO*							
	7991205200					1	02'1201	06'0228	
	[02]	*BADGE-T/GATE*							
	7994007010					1	02'1201	06'0228	
	[03]	*EMBLEM-SPORTS*							
	7991007000					1	02'1201	06'0228	
	[04]	*STICKER-PICK UP*							
	7995007000					1	02'1201	06'0228	
	[05]	*BADGE-HOOD*							
	7994105800					1	02'1201	06'0228	
	[06]	*EMBLEM-RHINOCEROS*							
	7993007000		LH			1	02'1201	06'0228	
	7993007010		RH			1	02'1201	06'0228	
	[07]	*EMBLEM-290S*							
	7992305810					2	02'1201	06'0228	
	[08]	*STICKER-ABS*							
	7992205001	ABS				1	02'1201	06'0228	
	7995206000	ABS/ABD				1	02'1201	06'0228	
	[09]	*STRIPE-SPORTS*							
	7996007000HBF		LH			1	02'1201	06'0228	SILVER(LIGHT,EXCEPT SAE/SAB COLOR)
	7996007010HBF		RH			1	02'1201	06'0228	SILVER(LIGHT,EXCEPT SAE/SAB COLOR)
	7996007000HBG		LH			1	02'1201	06'0228	GRAY(DARKER,ONLY SAE/SAB COLOR)
	7996007010HBG		RH			1	02'1201	06'0228	GRAY(DARKER,ONLY SAE/SAB COLOR)
	[12]	*LABEL-DIESEL*							
	7174103001					1	02'1201	06'0228	
	[13]	*LABEL-400kg*							
	7995507000					1	02'1201	06'0228	400KG

7980 DECK ATTACHED PARTS

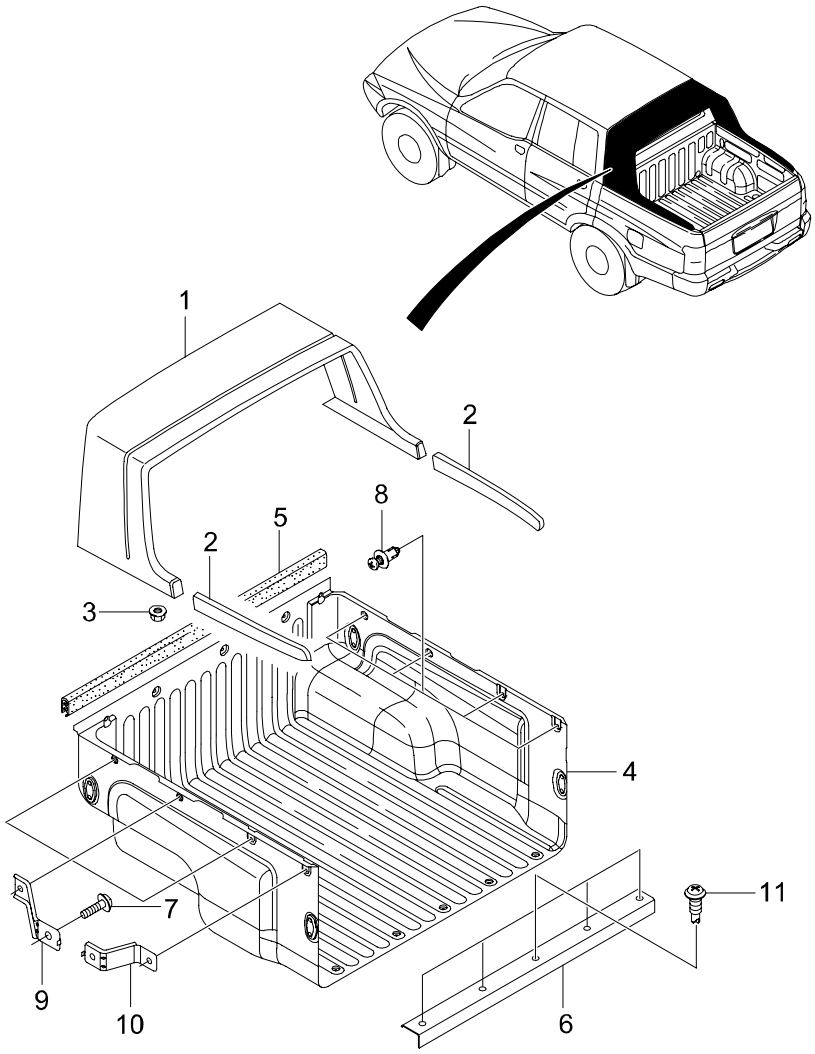

7980 - 01

7980 DECK ATTACHED PARTS

ITC	KEY NO. PART NO	PART NAME OPTION	L/R	T/M	DRV	MODEL 662LA	EFF. DATE FROM	EFF. DATE TO	REMARK
	[01]	*COVER ASSY-D PILLAR*							
	7962007100					1	02'1201	06'0228	W/OUT PAINT
	[02]	*COVER ASSY-DECK TOP*							
	7963007100		LH			1	02'1201	06'0228	W/OUT PAINT
	7964007100		RH			1	02'1201	06'0228	W/OUT PAINT
	[03]	*NUT*							
	930540800D					14	02'1201	06'0228	M8X1.25
	9305408007					14	02'1201	06'0228	M8X1.25 ,CONICAL WASHER
	[04]	*TRIM ASSY-DECK*							
	7383007003					1	02'1201	04'0629	
N	7383007005					1	04'0630	06'0228	
	[05]	*W/STIRP-FRT DECK TRIM*							
	7384007000					1	02'1201	06'0228	
	[06]	*REINF-RR DECK TRIM*							
	7384307000					1	02'1201	06'0228	SUS COVER
	[07]	*SCREW*							
	980140612D					8	02'1201	06'0228	M16X1.0X12
	[08]	*SCRIVET-DECK TRIM MTG*							
	9459007000					5	04'0630	06'0228	HEAD : ¥ö6 BOSS : ¥ö7.9
	9459107000					15	02'1201	06'0228	HEAD : ¥Ö26 BOSS : ¥Ö5.8
	[09]	*BRKT ASSY-DECK TRIM MTG FRT*							
	7383507001					6	02'1201	06'0228	
Y	7383507002					6	02'1201	06'0228	SHORTER
	[10]	*BRKT ASSY-DECK TRIM MTG RR*							
	7384507000					2	02'1201	06'0228	
Y	7384507001					2	02'1201	06'0228	LONGER
	[11]	*SCREW-DRILLING*							
	7389007000					5	02'1201		CHANGED MATERIAL

8010 INSTRUMENT CLUSTER

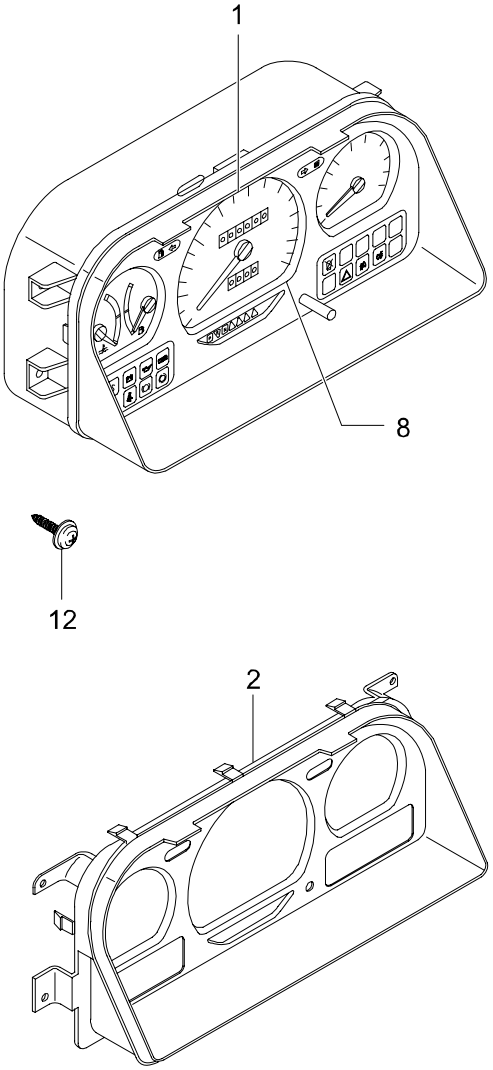

8010 INSTRUMENT CLUSTER

ITC	KEY NO. PART NO	PART NAME OPTION	L/R	T/M	DRV	MODEL 662LA									EFF. DATE FROM	EFF. DATE TO	REMARK
	[01]	*CLUSTER ASSY-INSTRUMENT*															
	8020105640	2WD,KPH		M		1									02'1201	06'0228	
	8020105110	4WD,KPH		M		1									02'1201	06'0228	
	8020105190	4WD,MPH(KPH)		M		1									02'1201	06'0228	
	8020105610	4WD,KPH,HAZARD		M		1									02'1201	06'0228	EASTERN EUROPE ONLY
	8020105370	4WD,KPH,SPEED LIMIT		M		1									02'1201	06'0228	GCC ONLY
	8020105650	2WD,KPH		A		1									02'1201	06'0228	
	8020105250	4WD,KPH		A		1									02'1201	06'0228	
	8020105310	4WD,MPH(KPH)		A		1									02'1201	06'0228	
	8020105510	4WD,KPH,HAZARD		A		1									02'1201	06'0228	EASTERN EUROPE ONLY
	8020105430	4WD,KPH,SPEED LIMIT		A		1									02'1201	06'0228	GCC ONLY
	[02]	*PLATE ASSY-WINDOW*															
	8025505000					1									02'1201	06'0228	
	[08]	*BULB-COMBI METER*															
	8024005000					1									02'1201	06'0228	(12V,1.4W)
	8024105000					1									02'1201	06'0228	(14V,3W)
	8024205100					1									02'1201	06'0228	(12V,3.4W)
	[12]	*SCREW*															
	984145020B					4									02'1201	06'0228	M5X20

8210 WIRING

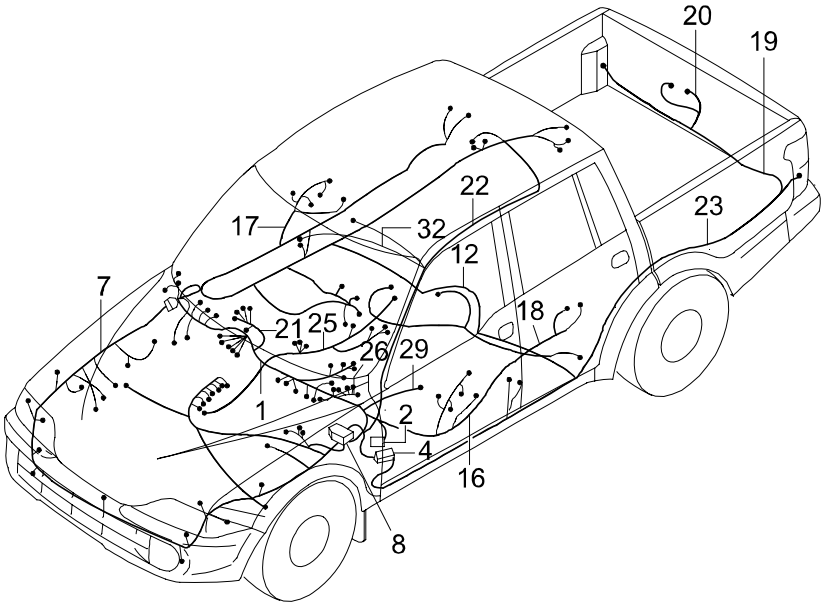

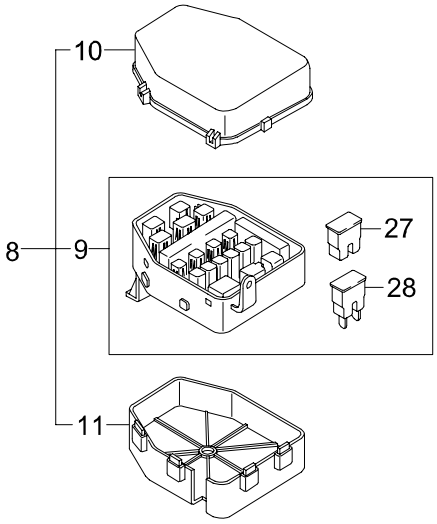

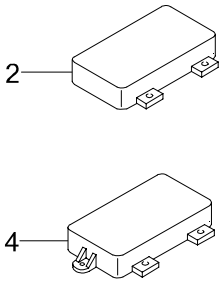

8210 WIRING

ITC	KEY NO. PART NO	PART NAME OPTION	L/R	T/M	DRV	MODEL 662LA	EFF. DATE FROM	EFF. DATE TO	REMARK
	[01]	*WIRING ASSY-MAIN*							
	8210107090			M		1	02'1201	03'0302	4WD
N	8210107091			M		1	03'0303	03'0921	4WD,2003M/Y
N	8210107092	4WD,-ABS,-IMMO		M		1	03'0922	03'0929	
N	8210107093	4WD,-ABS,-IMMO		M		1	03'0930	03'1225	
N	8210107094	-ABS,-IMMO		M	L	1	03'1226	06'0228	
	8210107100	ABS		M		1	02'1201	03'0302	4WD
N	8210107101	ABS		M		1	03'0303	03'0921	4WD,2003M/Y
N	8210107102	4WD,ABS,-IMMO		M		1	03'0922	03'1225	
N	8210107104	+ABS,-IMMO		M	L	1	03'1226	06'0228	
	8210107110	ABS/ABD		M		1	02'1201	03'0302	4WD
N	8210107111	ABS/ABD		M		1	03'0303	03'0924	4WD,2003M/Y
N	8210107112	4WD,ABS/ABD,-IMMO		M		1	03'0925	03'1225	
N	8210107114	+ABD,-IMMO		M	L	1	03'1226	06'0228	
	8210107121	4WD,-ABS,+IMMO		M		1	03'0313	03'0921	03M/YEAR
N	8210107122	4WD,-ABS,+IMMO		M		1	03'0922	03'1225	
N	8210107124	-ABS,+IMMO		M	L	1	03'1226	06'0228	
	8210107131	4WD,ABS,IMMO		M		1	03'0616	03'0921	
N	8210107132	4WD,ABS,IMMO		M		1	03'0922	03'1225	
N	8210107134	+ABS,+IMMO		M	L	1	03'1226	06'0228	
	8210107141	4WD,ABS/ABD,IMMO		M		1	03'0314	03'0924	
N	8210107142	4WD,ABS/ABD,IMMO		M		1	03'0925	03'1225	
N	8210107144	+ABD,+IMMO		M	L	1	03'1226	06'0228	
	8210107150			A		1	02'1201	03'0302	4WD
N	8210107151	-ABS,-IMMO		A		1	03'0303	03'0921	4WD,2003M/Y
N	8210107152	4WD,-ABS,-IMMO		A		1	03'0922	06'0228	
	8210207154	-ABS,-IMMO		A	L	1	03'1226	06'0228	
	8210107160	ABS		A		1	02'1201	03'0302	4WD
N	8210107161	ABS,-IMMO		A		1	03'0303	03'0921	4WD,2003M/Y
N	8210107162	4WD,ABS,-IMMO		A		1	03'0922	03'1225	
N	8210107164	+ABS,-IMMO		A	L	1	03'1226	06'0228	
	8210107170	ABS/ABD		A		1	02'1201	03'0302	4WD
N	8210107171	ABS/ABD		A		1	03'0303	03'1225	4WD,2003M/Y
N	8210107174	+ABD,-IMMO		A	L	1	03'1226	06'0228	
	8210107181	4WD,-ABS,+IMMO		A		1	03'0313	03'0921	
N	8210107182	4WD,-ABS,+IMMO		A		1	03'0922	03'1225	
N	8210107184	-ABS,+IMMO		A	L	1	03'1226	06'0228	
	8210107191	ABS,IMMO		A		1	03'0616	03'0921	
N	8210107192	4WD,ABS,IMMO		A		1	03'0922	03'1225	

8210 WIRING

ITC	KEY NO. PART NO	PART NAME OPTION	L/R	T/M	DRV	MODEL 662LA									EFF. DATE FROM	EFF. DATE TO	REMARK
	[01]	*WIRING ASSY-MAIN*															
	8210107204	+ABD,+IMMO		A	L	1									03'1226	06'0228	
	8210107290			M		1									02'1201	03'0302	2WD
N	8210107291	-ABS,-IMMO		M		1									03'0303	03'0924	2WD,2003M/Y
N	8210107292	2WD,-ABS,-IMMO		M		1									03'0925	03'1225	
N	8210107294	-ABS,-IMMO,2WD		M	L	1									03'1226	06'0228	
N	8210107194	+ABS,+IMMO		A	L	1									03'1226	06'0228	
	8210107300	ABS		M		1									02'1201	03'0302	2WD
N	8210107301	ABS		M		1									03'0303	06'0228	2WD,2003M/Y
	8210107304	+ABS,-IMMO,2WD		M	L	1									03'1226	06'0228	
	8210107310	ABS/ABD		M		1									02'1201	03'0302	2WD
N	8210107311	ABS/ABD		M		1									03'0303	03'1225	2WD,2003M/Y
N	8210107314	+ABD,-IMMO,2WD		M	L	1									03'1226	06'0228	
	8210107321	2WD,-ABS,+IMMO		M		1									03'0613	03'0924	
N	8210107322	2WD,-ABS,+IMMO		M		1									03'0925	06'0228	
	8210107324	-ABS,+IMMO,2WD		M	L	1									03'1226	06'0228	
	8210107334	+ABS,+IMMO,2WD		M	L	1									03'1226	06'0228	
	8210107344	+ABD,+IMMO,2WD		M	L	1									03'1226	06'0228	
	8210107350			A		1									02'1201	03'0302	2WD
N	8210107351			A		1									03'0303	03'0924	2WD,2003M/Y
N	8210107352	2WD,-ABS,-IMMO		A		1									03'0925	03'1225	
N	8210107354	-ABS,-IMMO,2WD		A	L	1									03'1226	06'0228	
	8210107360	ABS		A		1									02'1201	03'0302	2WD
N	8210107361	ABS		A		1									03'0303	03'1225	2WD,2003M/Y
N	8210107364	+ABS,-IMMO,2WD		A	L	1									03'1226	06'0228	
	8210107370	ABS/ABD		A		1									02'1201	03'0302	2WD
N	8210107371	ABS/ABD		A		1									03'0303	03'1225	2WD,2003M/Y
N	8210107374	+ABD,-IMMO,2WD		A	L	1									03'1226	06'0228	
	8210107381	2WD,-ABS,+IMMO		A		1									03'0616	03'0924	
N	8210107382	2WD,-ABS,+IMMO		A		1									03'0925	03'1225	
N	8210107384	-ABS,+IMMO,2WD		A	L	1									03'1226	06'0228	
	8210107394	+ABS,+IMMO,2WD		A	L	1									03'1226	06'0228	
	8210107404	+ABD,+IMMO,2WD		A	L	1									03'1226	06'0228	
	8210207591	4WD,+ABD,-S/ROOF,-IMMO		M	R	1									04'0129	06'0228	
	8210207711	+4WD,+ABD,-S/ROOF,-IMMO		A	R	1									04'0129	06'0228	
	8210207141	2WD,+ABS,-S/ROOF,-IMMO		A	R	1									04'0402	06'0228	
	8210207021	2WD,+ABS,-S/ROOF,-IMMO		M	R	1									04'0406	06'0228	
	[02]	*BOX ASSY-FUSE*															
	8211005000					1									02'1201	06'0228	UNDER DRIVER LAG

8210 WIRING

ITC	KEY NO. PART NO	PART NAME OPTION	L/R	T/M	DRV	MODEL 662LA									EFF. DATE FROM	EFF. DATE TO	REMARK
	[04]	*BOX ASSY-RELAY*															
	8212005000					1									02'1201	06'0228	UNDER DRIVER INSTRU' PANEL
	[07]	*WIRING ASSY-ENG*															
	8230607070	A/CON,ABS/ABD,-ECS				1									03'0307	03'0921	
N	8230607071	A/CON,ABS/ABD,-ECS				1									03'0922	06'0228	
	8230607100					1									02'1201	03'1225	KOREA2004 EMISSION
N	8230607102	DSL-A/CON,-ABS			L	1									03'1226	04'0621	CHANGED CIRCUIT H/LAMP &AUTO DR LOCK
Y	8230607103	DSL,-A/CON,-ABS	LH			1									04'0622	04'1123	ADDED 3P RETAINER ON FUSE&RELAY BOX
N	8230607104	DSL,-A/CON,-ABS	LH			1									04'1124	05'0203	MOVED BRAKE OIL SNR CONECT TO MAIN
Y	8230607105	DSL,-A/CON,-ABS			L	1									05'0204	06'0228	ADOPT RESIN TUBE
	8230607110	A/CON,ABS/ABD				1									02'1201	03'1225	KOREA2004 EMISSION
N	8230607112	DSL-A/CON,+ABS/ABD			L	1									03'1226	04'0726	CHANGED CIRCUIT H/LAMP &AUTO DR LOCK
Y	8230607113	DSL-A/CON,+ABS/ABD	LH			1									04'0727	04'1123	ADDED 3P RETAINER ON FUSE&RELAY BOX
N	8230607115	-A/CON,+ABS/ABD			L	1									04'1124	06'0228	
	8230607120	A/CON,ABS				1									02'1201	03'1225	KOREA2004 EMISSION
N	8230607122	DSL+A/CON,-ABS			L	1									03'1226	04'0629	CHANGED CIRCUIT H/LAMP &AUTO DR LOCK
Y	8230607123	DSL+A/CON,-ABS	LH			1									04'0630	04'1014	ADDED 3P RETAINER ON FUSE&RELAY BOX
N	8230607124	DSL+A/CON,-ABS	LH			1									04'1015	05'0124	MOVED BRAKE OIL SNR CONECT TO MAIN
Y	8230607125	DSL+A/CON,-ABS			L	1									05'0125	06'0228	ADOPT RESIN TUBE
	8230607130	A/CON,ABS/ABD				1									02'1201	03'0921	
N	8230607131	A/CON,ABS/ABD				1									03'0922	03'1225	
N	8230607132	DSL+A/CON,+ABS/ABD			L	1									03'1226	04'0621	CHANGED CIRCUIT H/LAMP &AUTO DR LOCK
Y	8230607133	DSL+A/CON,+ABS/ABD	LH			1									04'0622	04'1017	ADDED 3P RETAINER ON FUSE&RELAY BOX
N	8230607134	DSL+A/CON,+ABS/ABD	LH			1									04'1018	05'0124	MOVED BRAKE OIL SNR CONECT TO MAIN
Y	8230607135	DSL+A/CON,+ABS/ABD			L	1									05'0125	06'0228	ADOPT RESIN TUBE
	8230607510	DSL,-A/CON,-ABS			R	1									03'1226	06'0228	
	8230607520	DSL,-A/CON,+ABS/ABD			R	1									03'1226	06'0228	
	8230607530	DSL,+A/CON,-ABS			R	1									03'1226	04'0629	
Y	8230607531	DSL,+A/CON,-ABS			R	1									04'0630	04'1019	ADDED 3P RETAINER ON FUSE&RELAY BOX
N	8230607532	DSL,+A/CON,-ABS			R	1									04'1020	06'0228	MOVED BRAKE OIL SNR CONECT TO MAIN

8210 WIRING

ITC	KEY NO. PART NO	PART NAME OPTION	L/R	T/M	DRV	MODEL 662LA	EFF. DATE FROM	EFF. DATE TO	REMARK
	[07]	*WIRING ASSY-ENG*							
	8230607540	DSL,+A/CON,+ABS/ABD			R	1	03'1226	04'0629	
Y	8230607541	DSL,+A/CON,+ABS/ABD				1	04'0630	04'1019	ADDED 3P RETAINER ON FUSE&RELAY BOX
N	8230607542	DSL,+A/CON,+ABS/ABD				1	04'1020	06'0228	MOVED BRAKE OIL SNR CONECT TO MAIN
	[08]	*BOX ASSY-RELAY*							
	8232005020					1	02'1201	06'0228	IN ENG ROOM
	[09]	*BODY-RELAY BOX*							
	8232205000					1	02'1201	06'0228	IN ENG ROOM
	[10]	*COVER-RELAY BOX UPR*							
	8232306000					1	02'1201	06'0228	
	8232305000	ENGLISH				1	02'1201	06'0228	IN ENG ROOM
	[11]	*COVER-RELAY BOX BOTTOM*							
	8232105000					1	02'1201	06'0228	IN ENG ROOM
	[12]	*WIRING ASSY-FLOOR*							
	8250007000	-ABS				1	02'1201	03'0302	
N	8250007001	-ABS,RR DEFOGGER				1	03'0303	03'0914	ADD WIRE FOR HEAT RR GLASS
O	8250007002	-ABS,RR DEFOGGER				1	03'0915	03'1225	
N	8250007003	-ABS,-RR FOG			L	1	03'1226	05'0616	2004M/Y
O	8250007004	-ABS,-RR FOG				1	05'0617	06'0228	CHANGED LENTH OF RR DR CONNT
	8250007010	ABS/ABD				1	02'1201	06'0228	
N	8250007011	ABS/ABD				1	02'1201	03'0914	ADD WIRE FOR HEAT RR GLASS
O	8250007012	ABS/ABD,RR DEFOGGER				1	03'0915	03'1225	
N	8250007013	+ABS,-RR FOG			L	1	03'1226	05'0616	2004M/Y
O	8250007014	+ABS,-RR FOG				1	05'0617	06'0228	CHANGED LENTH OF RR DR CONNT
	8250007090	-ABS,RR FOG			L	1	03'0925	03'1225	
N	8250007091	-ABS,+RR FOG			L	1	03'1226	05'0616	
O	8250007092	-ABS,+RR FOG				1	05'0617	06'0228	CHANGED LENTH OF RR DR CONNT
	8250007100	ABS,RR FOG			L	1	03'0922	03'1225	
N	8250007101	+ABS,+RR FOG			L	1	03'1226	05'0616	
	8250007501	-ABS,-RR FOG			R	1	03'1226	04'0411	
O	8250007502	-ABS,-RR FOG			R	1	04'0412	06'0228	ADDED H/M STOP LAMP
	8250007511	+ABS,-RR FOG			R	1	03'1226	04'0411	
O	8250007512	+ABS,-RR FOG			R	1	04'0412	06'0228	ADDED H/M STOP LAMP

8210 WIRING

ITC	KEY NO. PART NO	PART NAME OPTION	L/R	T/M	DRV	MODEL 662LA									EFF. DATE FROM	EFF. DATE TO	REMARK
	[12]	*WIRING ASSY-FLOOR*															
	8250007521	-ABS,+RR FOG			L	1									03'1226	04'0411	
	8250007531	+ABS,+RR FOG			L	1									03'1226	04'0411	
O	8250007522	-ABS,+RR FOG				1									04'0412	06'0228	ADDED H/M STOP LAMP
O	8250007532	+ABS,+RR FOG			R	1									04'0412	06'0228	ADDED H/M STOP LAMP
O	8250007102	+ABS,+RR FOG				1									05'0617	06'0228	CHANGED LENTH OF RR DR CONNT
	[16]	*WIRING ASSY-FRT DR*															
	8271005602	STD	LH			1									02'1201	05'0630	
N	8271005604					1									05'0701	06'0228	STD,CHANGED CONNECTOR
	8271005701	DLX	LH			1									02'1201	05'0622	HEATER R/R VIEW MIRROR
N	8271005703		LH			1									05'0623	06'0228	DLX,HTD,CHANGED CONNECTOR
	8271005952				R	1									02'0819	05'0527	STD,D/SIDE
N	8271005953				R	1									05'0628	06'0228	STD,D/SIDE,CHANGED CONNECTOR
	8271005972	+HEAT MIRROR			R	1									02'0819	05'0630	DLX,D/SIDE
N	8271005973	+HEAT MIRROR				1									05'0701	06'0228	DLX,D/SIDE,CHANGED CONNECTOR
	[17]	*WIRING ASSY-FRT DR*															
	8272005601	STD	RH		L	1									02'1201	05'0630	
N	8272005603	-HEAT MIRROR			L	1									05'0701	06'0228	STD,CHANGED CONNECTOR
	8272005701	DLX	RH		L	1									02'1201	05'0622	HEATER R/R VIEW MIRROR
N	8272005703	+HEAT MIRROR			L	1									05'0623	06'0228	DLX,CHANGED CONNECTOR
	8272005902	-HEAT MIRROR			R	1									03'0902	05'0627	
N	8272005903	-HEAT MIRROR			R	1									05'0628	06'0228	CHANGED CONNECTOR
	8272005952	+HEAT MIRROR			R	1									02'0819	05'0630	
N	8272005953	+HEAT MIRROR				1									05'0701	06'0228	HTD,CHANGED CONNECTOR
	[18]	*WIRING ASSY-RR DR*															
	8273005600		LH			1									02'1201	06'0228	
	8274005900		RH			1									02'1201	06'0228	
	[19]	*WIRING ASSY-DECK LID*															
	8290007000					1									02'1201	06'0228	
N	8290007001					1									02'1201	06'0228	ADD WIRE FOR T/GATE ACTUATOR
	[20]	*WIRING ASSY-DECK*															
	8290007100					1									02'1201	06'0228	
N	8290007101					1									02'1201	06'0228	ADD WIRE FOR T/GATE ACTUATOR

8210 WIRING

ITC	KEY NO. PART NO	PART NAME OPTION	L/R	T/M	DRV	MODEL 662LA	EFF. DATE FROM	EFF. DATE TO	REMARK
	[21]	*WIRING ASSY-A/CON*							
	8280005071	MANUAL				1	02'1201	06'0228	
	[22]	*WIRING ASSY-ROOF*							
	8291005062					1	02'1201	06'0228	
	[23]	*WIRING ASSY-FRAME*							
	8280007000	-RR FOG				1	02'1201	03'0302	
N	8280007001	-RR FOG				1	03'0303	03'0914	ADD WIRE FOR T/GATE ACTUATOR
N	8280007002	-RR FOG				1	03'0915	06'0228	
	8280007010	RR FOG				1	03'0915	06'0228	
	[25]	*WIRING ASSY-T/M EXTENSION*							
	8292007100			M		1	02'1201	03'1225	KOREA2004 EMISSION
N	8292007101	DSL		M		1	03'1226	06'0228	2004M/Y
	8292007001			A		1	02'1201	03'1225	WATERPROOF TYPE
N	8292007002	DSL		A		1	03'1226	06'0228	2004M/Y
	[26]	*WIRING ASSY-DIAGNOSIS*							
	8291105000					1	02'1201	04'0219	JOIN SCANNER
N	8291105001					1	04'0220	06'0228	CHANGED ARRANGING PIN
	[27]	*FUSE*							
	9609100020					1	02'1201	06'0228	20A,FEMALE TYPE
	9609100030					1	02'1201	06'0228	30A,FEMALE TYPE
	9609100050					1	02'1201	06'0228	50A,FEMALE TYPE
	9609100060					1	02'1201	06'0228	60A,FEMALE TYPE
	[28]	*FUSE*							
	9609201030					1	02'1201	06'0228	30A,MALE TYPE
	9609201080					1	02'1201	06'0228	80A,MALE TYPE,BLACK

8310 FRONT LAMP

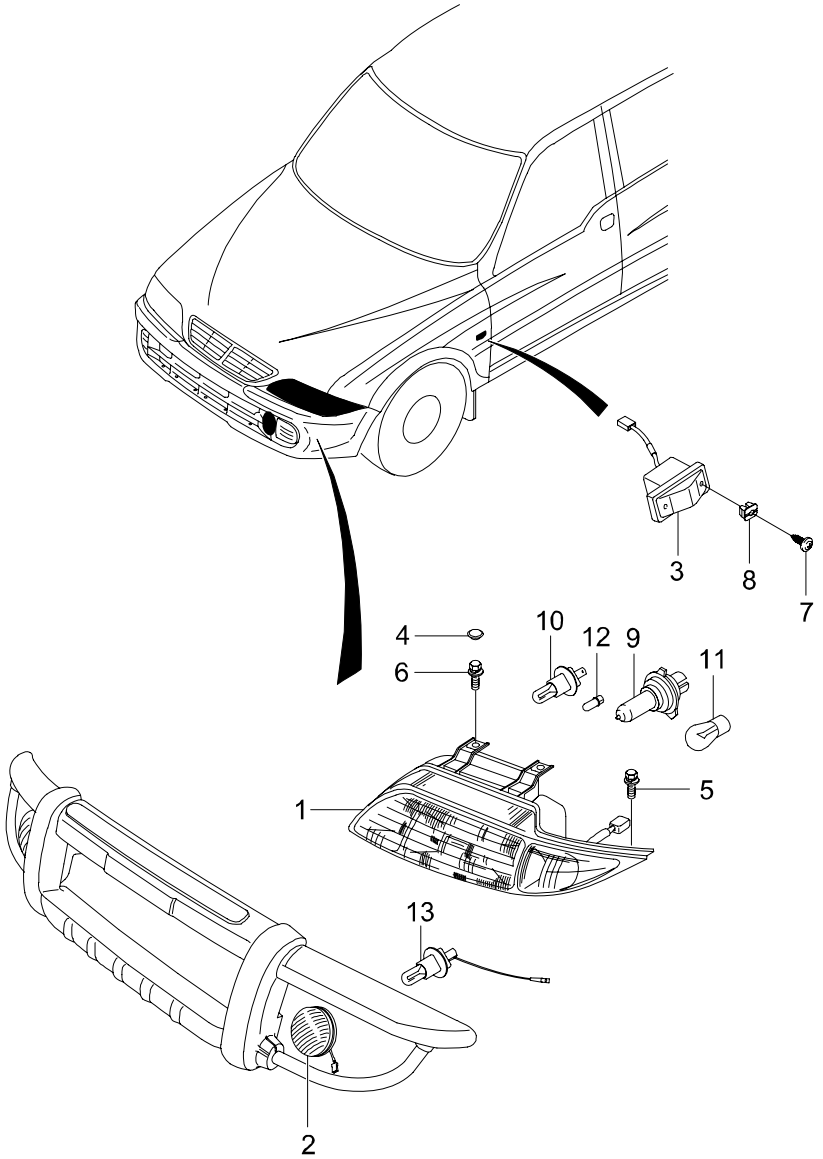

8310 FRONT LAMP

ITC	KEY NO. PART NO	PART NAME OPTION	L/R	T/M	DRV	MODEL 662LA									EFF. DATE FROM	EFF. DATE TO	REMARK
	[01]	*LAMP ASSY-HEAD*															
	8310105531	-L/DEVICE	LH		L	1									02'1201	04'1231	
Y	8310105532	-L/DEVICE	LH		L	1									05'0101	06'0228	USED PB FREE BULB
	8310105331	+L/DEVICE	LH		L	1									02'1201	04'1231	
Y	8310105332	+L/DEVICE	LH		L	1									05'0101	06'0228	USED PB FREE BULB
	8310205531	-L/DEVICE	RH		L	1									02'1201	04'1231	
Y	8310205532	-L/DEVICE	RH		L	1									05'0101	06'0228	USED PB FREE BULB
	8310205331	+L/DEVICE	RH		L	1									02'1201	04'1231	
Y	8310205332	+L/DEVICE	RH		L	1									05'0101	06'0228	USED PB FREE BULB
	8310105631	L/DEVICE	LH		R	1									02'1201	04'1231	
Y	8310105632	L/DEVICE	LH		R	1									05'0101	06'0228	USED PB FREE BULB
	8310105731	-L/DEVICE	LH		R	1									02'1201	04'1231	
Y	8310105732	-L/DEVICE	LH		R	1									05'0101	06'0228	USED PB FREE BULB
	8310205631	L/DEVICE	RH		R	1									02'1201	04'1231	
Y	8310205632	L/DEVICE	RH		R	1									05'0101	06'0228	USED PB FREE BULB
	8310205731	-L/DEVICE	RH		R	1									02'1201	04'1231	
Y	8310205732	-L/DEVICE	RH		R	1									05'0101	06'0228	USED PB FREE BULB
	[02]	*LAMP ASSY-FOG*															
	8320105701					2									02'1201	06'0228	WHITE CLEAR
	[03]	*LAMP ASSY-SIDE REPEATER*															
	8340105202		LH			1									02'1201	03'0302	YELLOW
O	8340105300		LH			1									03'0303	04'1231	WHITE
Y	8340105301		LH			1									05'0101	06'0228	WHITE,USED PB FREE BULB
	8340205201		RH			1									02'1201	03'0302	YELLOW
O	8340205300		RH			1									03'0303	04'1231	WHITE
Y	8340205301		RH			1									05'0101	06'0228	WHITE,USED PB FREE BULB
	[04]	*FASTENER*															
	9912608100					2									02'1201	06'0228	
	[05]	*SCREW*															
	982740616D					2									02'1201	06'0228	M6X1.0X16
	[06]	*SCREW*															
	982840616D					4									02'1201	06'0228	
	[07]	*SCREW*															
	9370550200					4									02'1201	06'0228	M5X20

8310 FRONT LAMP

ITC	KEY NO. PART NO	PART NAME OPTION	L/R	T/M	DRV	MODEL 662LA									EFF. DATE FROM	EFF. DATE TO	REMARK
	[08] 9491105000	*GROMMET*				4									02'1201	06'0228	
	[09] 6618265301	*BULB* LOW BEAM(H4)				2									02'1201	06'0228	12V 60/55W(CLEAR)
	[10] 8317008100	*BULB* HIGH BEAM(H1)				2									02'1201	06'0228	12V 55W(CLEAR)
	[11] 6618263443	*BULB* T/SIG(PY21W)				2									02'1201	06'0228	12V 21W(AMBER)
	[12] 8315008100	*BULB* POSITION(W5W)				2									02'1201	04'1231	12V 5W(CLEAR)
Y	8315008101	POSITION(W5W)				2									05'0101	06'0228	12V 5W(CLEAR),PB FREE BULB
	[13] 6618265501	*BULB* FOG(H3)				2									02'1201	06'0228	12V 55W(CLEAR)

8320 REAR LAMP

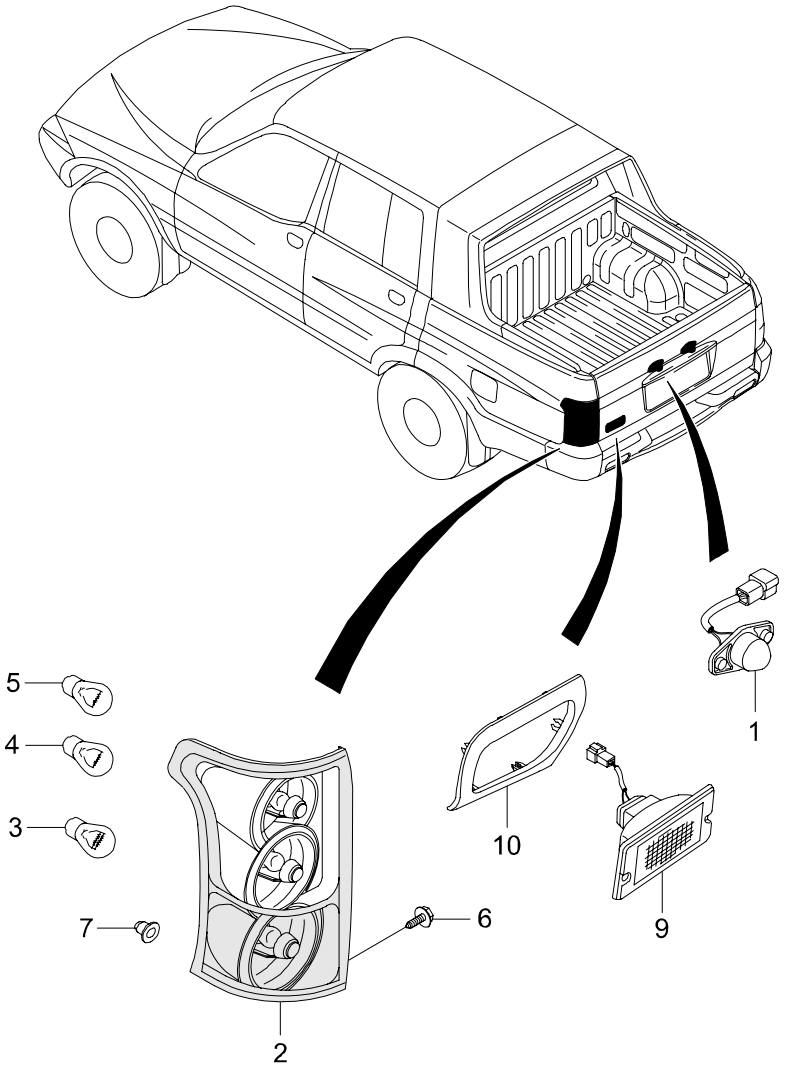

8320 REAR LAMP

ITC	KEY NO. PART NO	PART NAME OPTION	L/R	T/M	DRV	MODEL 662LA	EFF. DATE FROM	EFF. DATE TO	REMARK
	[01]	*LAMP ASSY-LICENCE*							
	8370105100					2	02'1201	04'1231	
Y	8370105101					2	05'0101	06'0228	USED PB FREE BULB
	[02]	*LAMP ASSY-RR COMBI*							
	8360107000		LH			1	02'1201	04'1231	GEN(-EU)
Y	8360107001		LH			1	05'0101	06'0228	GEN(-EU),USED PB FREE BULB
	8360307000		LH			1	02'1201	04'1231	EU ONLY
Y	8360307001		LH			1	05'0101	06'0228	EU ONLY,USED PB FREE BULB
	8360207000		RH			1	02'1201	04'1231	GEN(-EU)
Y	8360207001		RH			1	05'0101	06'0228	GEN(-EU),USED PB FREE BULB
	8360407000		RH			1	02'1201	04'1231	EU ONLY
Y	8360407001		RH			1	05'0101	06'0228	EU ONLY,USED PB FREE BULB
	[03]	*BULB*							
	8363008500	TAIL/STOP				2	02'1201	04'1231	12V 27/8W(WHITE),GEN(-EU)
Y	8363007001	TAIL/STOP				2	05'0101	06'0228	12V 27/8W(WHITE),PB FREE BULB,GEN(-EU)
	8363008510	TAIL/STOP				2	02'1201	04'1231	P21/5W,EU ONLY
Y	8363008511	TAIL/STOP				2	05'0101	06'0228	P21/5W,USED PB FREE BULB,EU ONLY
	[04]	*BULB*							
	8365008500	B/UP				2	02'1201	04'1231	12V 27W(WHITE),GEN(-EU)
Y	8364007001	B/UP				2	05'0101	06'0228	12V 27W,USED PB FREE BULB,GEN(-EU)
	8365008510	B/UP				2	02'0201	04'1231	P21W,EU ONLY
Y	8365008511	B/UP				2	05'0101	06'0228	P21W,USED PB FREE BULB,EU ONLY
	[05]	*BULB*							
	8366008500	T/SIG				2	02'1201	04'1231	12V 27W(AMBER),GEN(-EU)
Y	8365007001	T/SIG				2	05'0101	06'0228	12V 27W(AMBER),PB FREE BULB,GEN(-EU)
	8366008510	T/SIG				2	02'1201	04'1231	PY21W,AMBER,EU ONLY
Y	8366008511	T/SIG				2	05'0101	06'0228	PY21W,USED PB FREE BULB,EU ONLY

8320 REAR LAMP

ITC	KEY NO. PART NO	PART NAME OPTION	L/R	T/M	DRV	MODEL 662LA									EFF. DATE FROM	EFF. DATE TO	REMARK
	[06]	*SCREW*															
	980640616D					4									02'1201	06'0228	M6X0.8X16
	[07]	*RETAINER ASSY-RR COMBI MTG*															
	8360308000					4									02'1201	06'0228	
	[09]	*LAMP ASSY-RR FOG*															
	8385005001		LH			1									03'0815	04'1231	EU
Y	8385005002		LH			1									05'0101	06'0228	EU,USED PB FREE BULB
	8385005101		RH			1									03'0815	04'1231	EU
Y	8385005102		RH			1									05'0101	06'0228	EU,USED PB FREE BULB
	[10]	*BEZEL-RR FOG LAMP MTG*															
	8385307000	RR FOG	LH			1									03'0815	06'0228	EU
	8385307100	RR FOG	RH			1									03'0815	06'0228	EU

8410 FUSE & RELAY

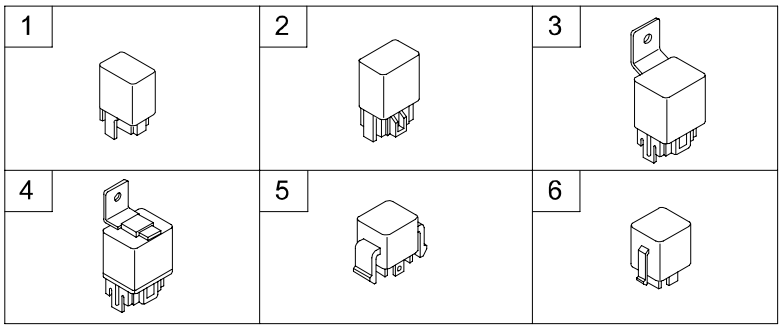

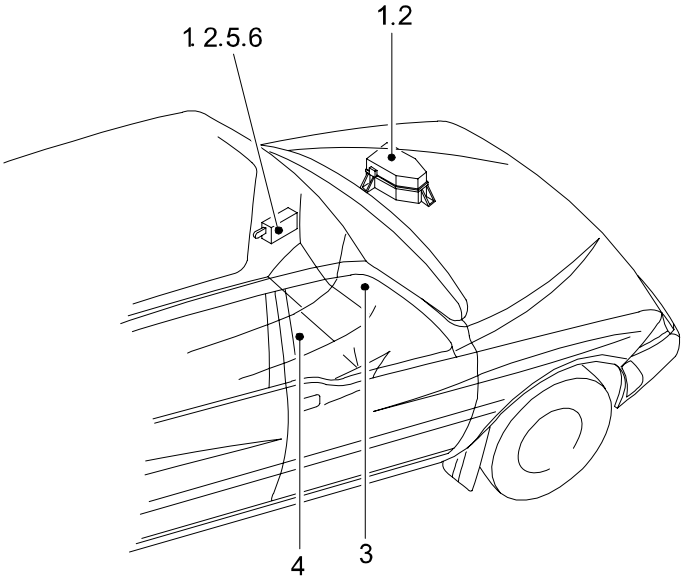

8410 FUSE & RELAY

ITC	KEY NO. PART NO	PART NAME OPTION	L/R	T/M	DRV	MODEL 662LA									EFF. DATE FROM	EFF. DATE TO	REMARK
	[01]	*RELAY ASSY-POWER*															
	8413005000					1									02'1201	06'0228	3P
	8440006500	RR FOR				1									02'1201	06'0228	5PIN,FOR RR FOG LAMP,EU ONLY
	[02]	*RELAY ASSY-MINI*															
	8415005000					1									02'1201	06'0228	4P
	8441008000					1									03'1226	06'0228	
	[03]	*RELAY ASSY-POWER*															
	8417005000					1									02'1201	06'0228	4P,BRACKET TYPE
	[04]	*RELAY ASSY-POWER*															
	8419005000					1									02'1201	06'0228	4P,N/CLOSE
	[05]	*RELAY ASSY-POWER*															
	8421005001					1									02'1201	06'0228	5P
	[06]	*FLASHER UNIT*															
	8441005100					1									02'1201	06'0228	

8510 SWITCH

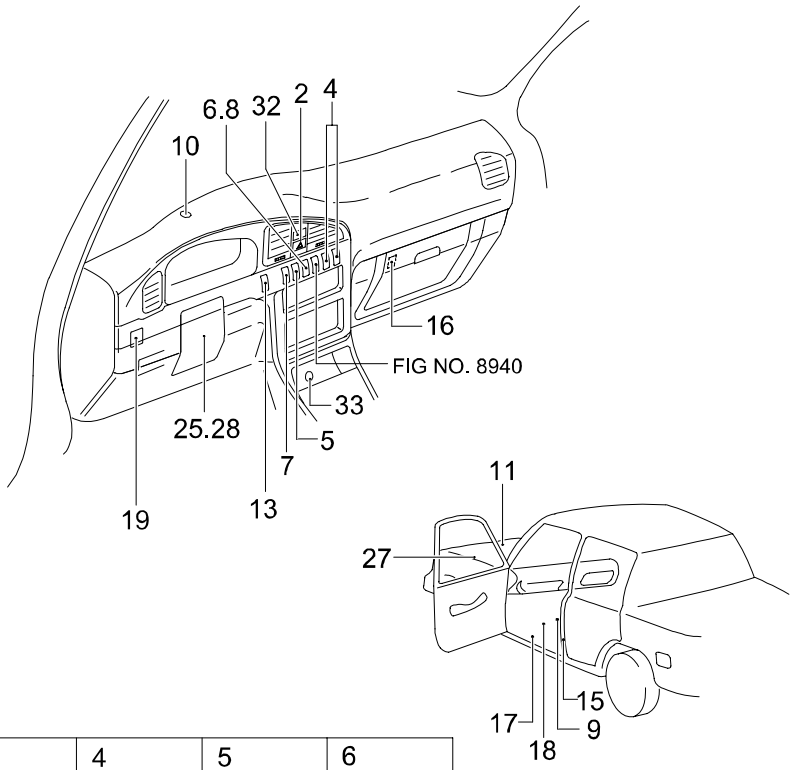
6.8
32
2
4
10
16
FIG NO. 8940
33
25.28
5
7
19
13
11
27
15
17
9
18

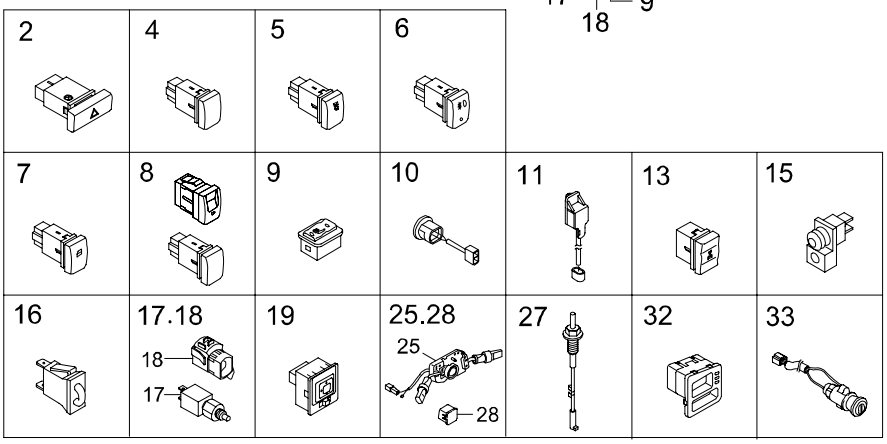
2
4
5
6
7
8
9
10
11
13
15
16
17.18
18
17
19
25.28
25
28
27
32
33

8510 SWITCH

ITC	KEY NO. PART NO	PART NAME OPTION	L/R	T/M	DRV	MODEL 662LA									EFF. DATE FROM	EFF. DATE TO	REMARK
	[02]	*SWITCH ASSY-HAZARD*															
	8521005700LAD				L	1									02'1201	04'1231	
Y	8521005701LAD				L	1									05'0101	06'0228	USED PB FREE BULB
	8521005000				R	1									02'1201	04'1231	
Y	8521005001				R	1									05'0101	06'0228	USED PB FREE BULB
	[04]	*COVER-BLANK CTR FACIA S/W*															
	8524105700LAD				L	AR									02'1201	06'0228	
	8525105000				R	AR									02'1201	06'0228	
	[05]	*SWITCH ASSY-O/S MIRROR HEATED*															
	8526007000LAD				L	1									02'1201	03'0302	HEATER RR VIEW MIRROR
O	8526005710LAD				L	1									03'0303	04'1231	RR DEFOGER&HEATER RR VIEW MIR
Y	8526005711LAD				L	1									05'0101	06'0228	USED PB FREE BULB
	8526005800				R	1									02'1201	06'0228	RR DEFOGGER
O	8526005810				R	1									03'0303	04'1231	RR DEFOGGER & O/S MIRR HEATED
Y	8526005811				R	1									05'0101	06'0228	USED PB FREE BULB
	[06]	*SWITCH ASSY-FOG LAMP FRT*															
	8527005700LAD				L	1									02'1201	04'1231	
Y	8527005701LAD				L	1									05'0101	06'0228	USED PB FREE BULB
	8527005800				R	1									02'1201	04'1231	
Y	8527005801				R	1									05'0101	06'0228	USED PB FREE BULB
	[07]	*SWITCH ASSY-DR UNLOCK*															
	8524005700LAD					1									02'1201	06'0228	
	[08]	*SWITCH ASSY-FOG LAMP RR*															
	8525005700LAD				L	1									03'0815	04'1231	EU
Y	8525005701LAD	+RR FOG			L	1									05'0101	06'0228	EU,USED PB FREE BULB
	8525005820				R	1									03'0815	04'1231	EU
Y	8525005821				R	1									05'0101	06'0228	EU,USED PB FREE BULB
	[09]	*SWITCH ASSY-SEAT HEATED*															
	8589005701LAD	S/WARMER			L	1									03'1226	04'1231	2004M/Y
Y	8589005702LAD	S/WARMER			L	1									05'0101	06'0228	USED PB FREE BULB
	8589005811LAD	S/WARMER			R	1									03'1226	04'1231	2004M/Y, RHD ONLY
Y	8589005812LAD	S/WARMER			R	1									05'0101	06'0228	USED PB FREE BULB

8510 SWITCH

ITC	KEY NO. PART NO	PART NAME OPTION	L/R	T/M	DRV	MODEL 662LA	EFF. DATE FROM	EFF. DATE TO	REMARK
	[10] 8534005000	*SENSOR ASSY-SUN*				1	02'1201	06'0228	
	[11] 8535006000	*SENSOR ASSY-AMBIENT*				1	02'1201	06'0228	
	[13]	*SWITCH ASSY-4WD*							
	8552105700LAD	2WD				1	02'1201	06'0228	BLANKING COVER
	8552005700LAD	4WD				1	02'1201	04'1231	WITH CIRCUIT
Y	8552005701LAD	4WD				1	05'0101	06'0228	USED PB FREE BULB
	[15] 8573005100	*SWITCH ASSY-DR*				1	02'1201	06'0228	
	[16] 8574005000	*SWITCH ASSY-GLOVE BOX*				1	02'1201	06'0228	
	[17] 8576006000	*SWITCH ASSY-INTERLOCK*		M		1	02'1201	06'0228	
	[18] 8578005020	*SWITCH ASSY-KICK DOWN*		A		1	02'1201	06'0228	
	[19]	*SWITCH ASSY-O/S MIRROR*							
	8581005000				R	1	02'1201	06'0228	
	8581005700LAD				L	1	02'1201	06'0228	ELECTRICAL
	[25]	*SWITCH ASSY-MULTI FUNCTION*							
	8590105191					1	02'1201	06'0228	
	8590105202	A/BAG				1	02'1201	06'0228	WITH CONTACT COIL
	[27] 8570005800	*SWITCH ASSY-HOOD*				1	02'1201	06'0228	
	[28] 8592106000LAB	*COVER-A/CRUISE CONTROL SWITCH BLANKG*				1	02'1201	06'0228	
	[32] 8111005700LAD	*CLOCK ASSY-DIGITAL*				1	02'1201	06'0228	
	[33]	*CIGAR LIGHTER ASSY*							
	8120005701					1	02'1201	06'0228	WITH WIRE&SOCKET
	8121005830				R	1	02'1201	06'0228	RR CONSOLE
	8121005840				R	1	02'1201	06'0228	FRT CRASH PAD

8610 ELECTRICAL PARTS

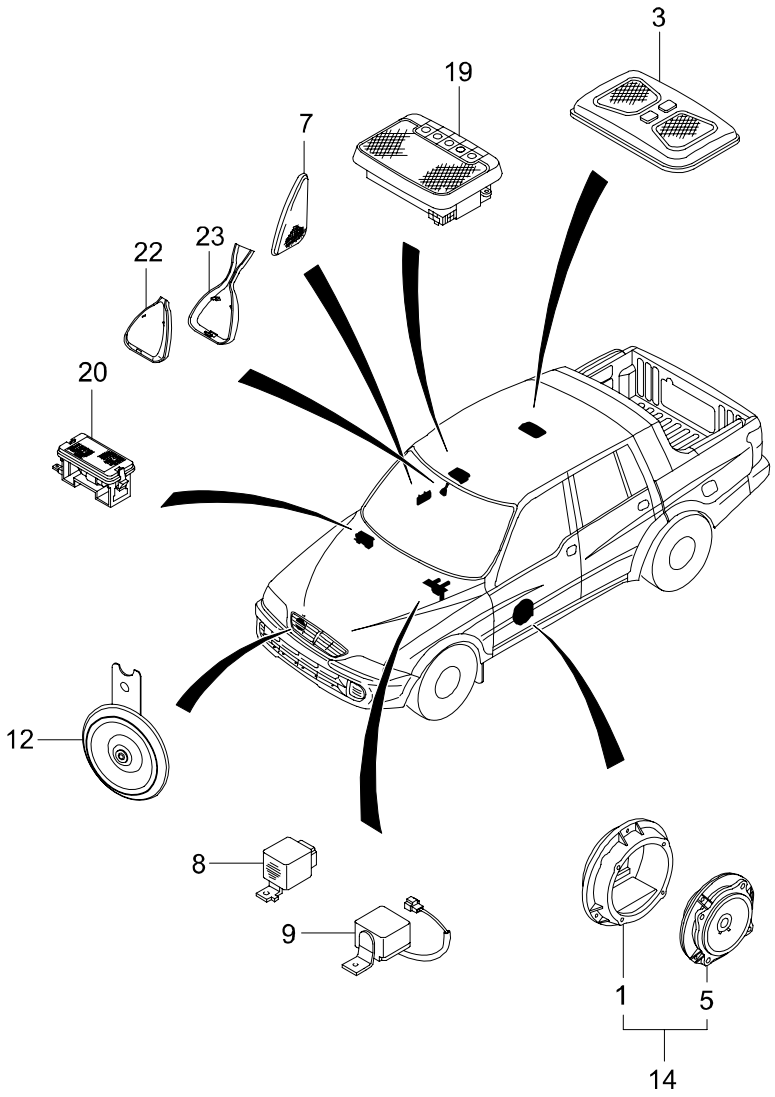

8610 ELECTRICAL PARTS

ITC	KEY NO. PART NO	PART NAME OPTION	L/R	T/M	DRV	MODEL 662LA									EFF. DATE FROM	EFF. DATE TO	REMARK
	[01]	*PROTECTOR-FRT SPEAKER*															
	8931205000					1									02'1201	06'0228	
	[03]	*LAMP ASSY-MAP*															
	8372005800AAR					1									02'1201	04'1231	
Y	8372005801AAR					1									05'0101	06'0228	USED PB FREE BULB
	[05]	*SPEAKER-FRT*															
	8931105000	STD				1									02'1201	06'0228	
	8931105800	Hi-SPEAKER				1									02'1201	06'0228	4SPEAKER(TWITTER)PACK
	[07]	*LAMP ASSY-DR COURTESY*															
	8374005101		LH			1									02'1201	04'1231	
Y	8374005102		LH			1									05'0101	06'0228	USED PB FREE BULB
	8374505101		RH			1									02'1201	04'1231	
Y	8374505102		RH			1									05'0101	06'0228	USED PB FREE BULB
	[08]	*BELL ASSY-CHIME*															
	8661005000					1									02'1201	06'0228	
	[09]	*BUZZER ASSY-PIEZO*															
	8662005000					1									02'1201	06'0228	
	[12]	*HORN ASSY*															
	8651005001					1									02'1201	06'0228	HIGH SOUND
N	8651005002					1									02'1227	06'0228	CONNECTOR WATERPROOF
	8655005002	DUAL HORN	RH			1									02'1201	06'0228	LOW SOUND
	[14]	*SPEAKER & PROTECTOR ASSY-FRT*															
	8931005001	STD				2									02'1201	06'0228	
	8931005800	Hi-SPEAKER				2									02'1201	06'0228	4SPEAKER(TWITTER)PACK
	[19]	*LAMP ASSY-FRT ROOM*															
	8371005800AAR					1									02'1201	04'1231	
Y	8371005801AAR					1									05'0101	06'0228	USED PB FREE BULB
	[20]	*LAMP ASSY-GLOVE BOX*															
	8375005000					1									02'1201	04'1231	
Y	8375005001					1									05'0101	06'0228	USED PB FREE BULB

8610 ELECTRICAL PARTS

ITC	KEY NO. PART NO	PART NAME OPTION	L/R	T/M	DRV	MODEL 662LA									EFF. DATE FROM	EFF. DATE TO	REMARK
	[23] 8793005500	*COVER ASSY-STYLING* S/ROOF				1									03'1226	06'0228	2004M/Y

8710 CAR ALARM & ANTI-THIEF SYSTEM

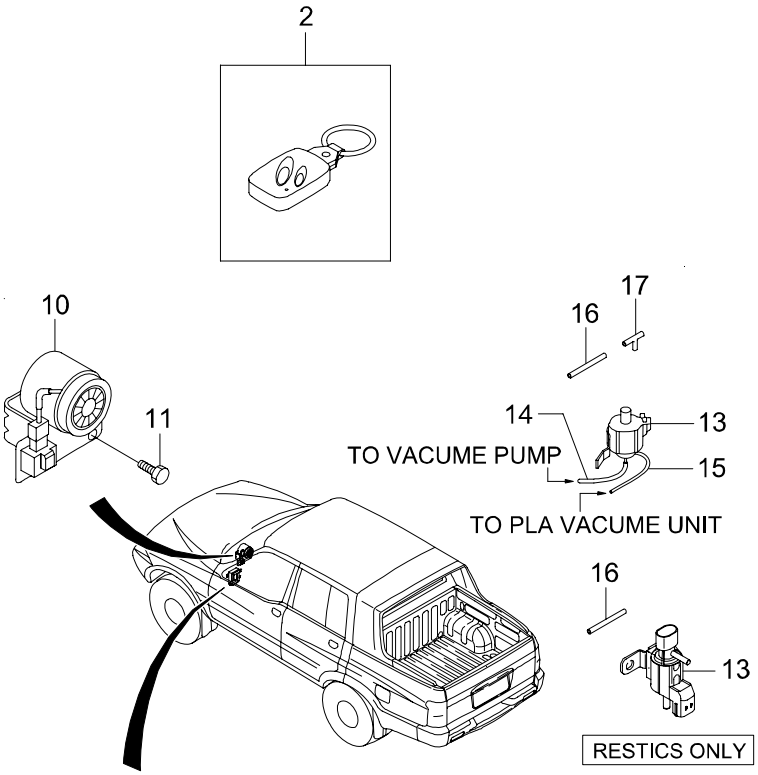

OLD(~2003.12.26)	NEW(2003.12.26~)
M / T	M / T
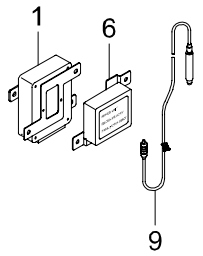	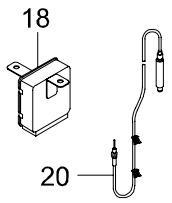

8710 CAR ALARM & ANTI-THIEF SYSTEM

ITC	KEY NO. PART NO	PART NAME OPTION	L/R	T/M	DRV	MODEL 662LA	EFF. DATE FROM	EFF. DATE TO	REMARK
	[01] 8711005800	*UNIT ASSY-STICS*				1	02'1201	06'0228	
	[02] 8715005820	*TRANSMITTER ASSY-REKES*		M		1	02'1201	03'1225	
	8715008300					1	03'1226	06'0228	GEN,SYMC,2004M/Y
	8715008400					1	03'1226	06'0228	EU AREA,SYMC,2004M/Y
	[03] 8755005800	*REMOTE STARTING UNIT* RES		A		1	02'1201	06'0228	
	[04] 8756005801	*TRANSMITTER ASSY-REMOTE START* RES		A		1	02'1201	06'0228	
	[05] 8757005803	*ANTENNA ASSY-REMOTE START* RES		A		1	02'1201	06'0228	
	[06] 8716105821	*RECEIVER-REKES*				1	02'1201	06'0228	
	[09] 8716205821	*ANTENNA ASSY-REKES*				1	02'1201	06'0228	
	[10] 8663006001	*SIREN ASSY*				1	02'1201	06'0228	
	[11] 982440616D	*BOLT*				1	02'1201	06'0228	
	[12] 0000000635	*COVER-REKES TRANSMITTER BATTERY*				1	02'1201	06'0228	
	[13] 8758005810	*VALVE ASSY-SOLENOID* RES		A		1	02'1201	04'0108	
O	8758005811	RES		A		1	04'0109	06'0228	
	[14] 6882005011	*HOSE-VACCUM*				1	02'1201	06'0228	
	[15] 6882505011	*HOSE-VACCUM*				1	02'1201	06'0228	

8710 CAR ALARM & ANTI-THIEF SYSTEM

ITC	KEY NO. PART NO	PART NAME OPTION	L/R	T/M	DRV	MODEL 662LA									EFF. DATE FROM	EFF. DATE TO	REMARK
	[16]	*HOSE-VACCUM*															
	9773003017					1									02'1201	06'0228	
	[17]	*CONNECTOR*															
	4154303000					1									02'1201	06'0228	
	[18]	*STICS UNIT*															
	8713005000					1									03'1226	04'0919	2004M/Y,W/O REKES FUNCTION
Y	8713005001					1									04'0920	06'0228	W/O REKES FUNCTION
	8712005100					1									03'1226	04'1115	GEN(-EU)
Y	8712005101					1									04'1116	06'0228	GEN(-EU)
	8712005200					1									03'1226	04'1115	EU
Y	8712005201					1									04'1116	06'0228	EU
	[20]	*ANTENNA ASSY-RKSTICS*															
	8716205100				L	1									03'1226	06'0228	GEN(-EU), TUBE COLOR:RED
	8716205150				R	1									03'1226	06'0228	GEN(-EU), TUBE COLOR:RED
	8716205200				L	1									03'1226	06'0228	+EU, TUBE COLOR:YELLOW
	8716205250				R	1									03'1226	06'0228	+EU, TUBE COLOR:YELLOW1

8730 IMMOBILIZER

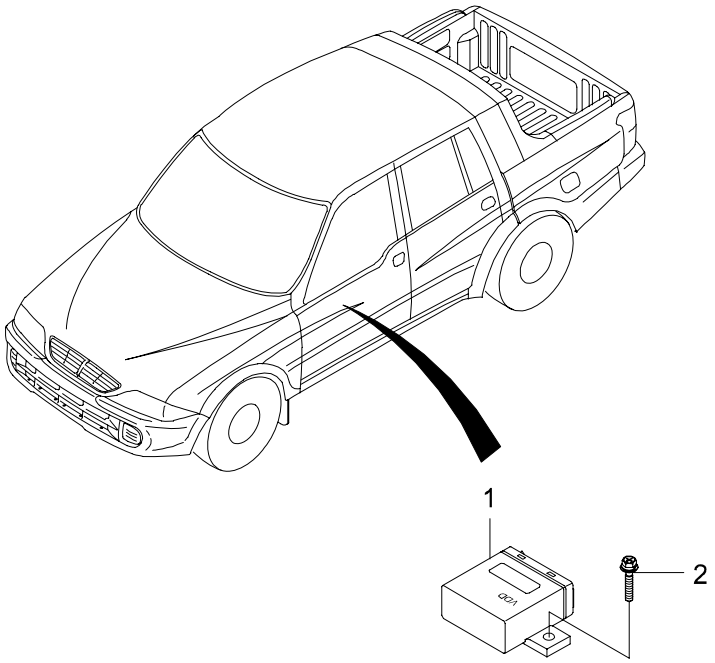

8730 IMMOBILIZER

ITC	KEY NO. PART NO	PART NAME OPTION	L/R	T/M	DRV	MODEL 662LA									EFF. DATE FROM	EFF. DATE TO	REMARK
	[01]	*IMMOBILIZER UNIT*															
	8695005800	DSL				1									02'1101	06'0228	
	[02]	*SCREW*															
	982740616D					2									02'1101	06'0228	M6X1.0X16 ,HEX SEMS

8810 AIRBAG SYSTEM

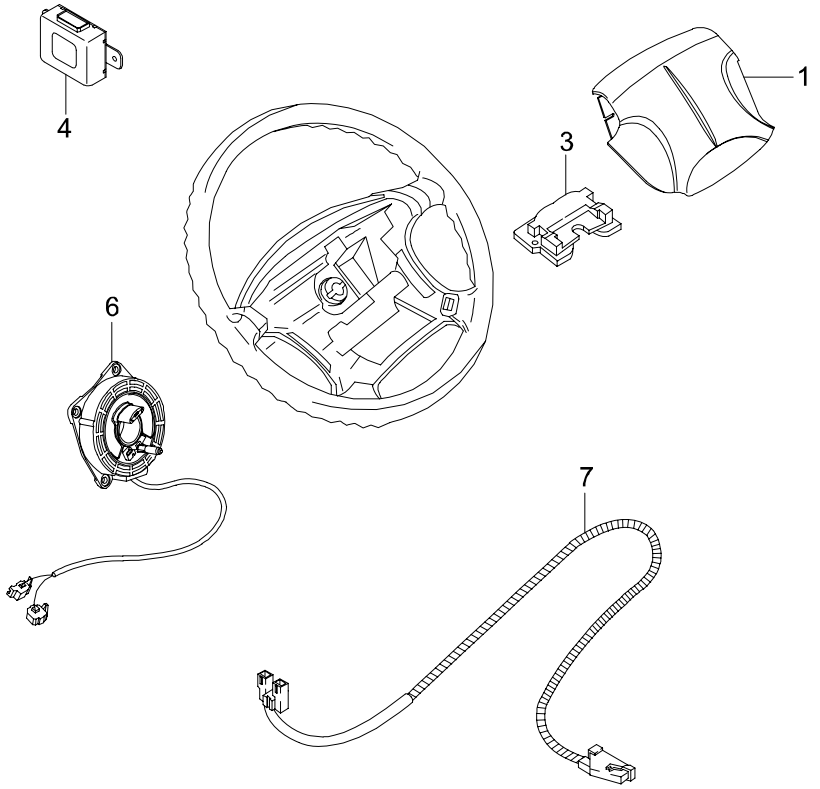

8810 AIRBAG SYSTEM

ITC	KEY NO. PART NO	PART NAME OPTION	L/R	T/M	DRV	MODEL 662LA									EFF. DATE FROM	EFF. DATE TO	REMARK
	[01]	*MODULE ASSY-STRG WHEEL*															
	4610205531					1									02'1201	04'0129	
Y	4610205532					1									04'0130	06'0228	
	[03]	*DAMPER-STEERING WHEEL*															
	4619005220					1									02'1201	06'0228	
	[04]	*AIRBAG UNIT*															
	8690005800					1									02'1201	06'0228	
	[06]	*COIL ASSY-STEERING CONTACT*															
	8592005010					1									02'1201	06'0228	6 CHANNEL
	[07]	*WIRING ASSY-AIRBAG EXTENSION*															
	8292005600Z	SINGLE A/BAG,-PT			L	1									02'1201	06'0228	

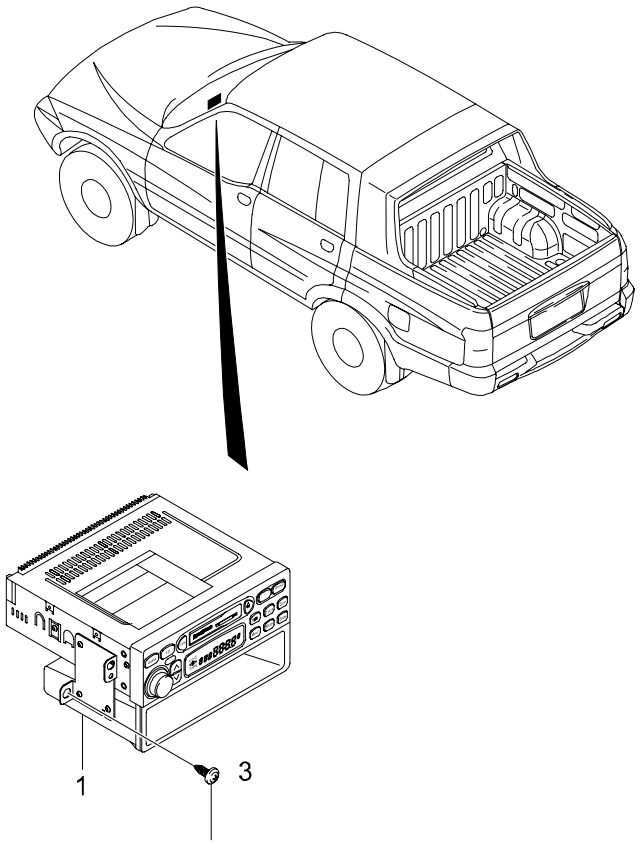
1
3

8910 AUDIO SYSTEM

ITC	KEY NO. PART NO	PART NAME OPTION	L/R	T/M	DRV	MODEL 662LA									EFF. DATE FROM	EFF. DATE TO	REMARK
	[01]	*CASSETTE ASSY*															
	8911005711	1DIN, STD				1									02'1201	06'0228	GEN AREA(EXCEPT CTR&SOUTH AMERICA)
	8911005780	1DIN STD,LATIN				1									02'1201	06'0228	CENTRAL SOUTH AMERICA ONLY
	8911005741	1DIN DLX				1									02'1201	06'0228	GEN.AERA(EXCEPT C/S/AMERICA)
	8911005790	1DIN DLX,LATIN				1									02'1201	06'0228	CENTRAL SOUTH AMERICA ONLY
	[03]	*SCREW*															
	9380450162					4									02'1201	06'0228	M5X16

8920 ANTENNA

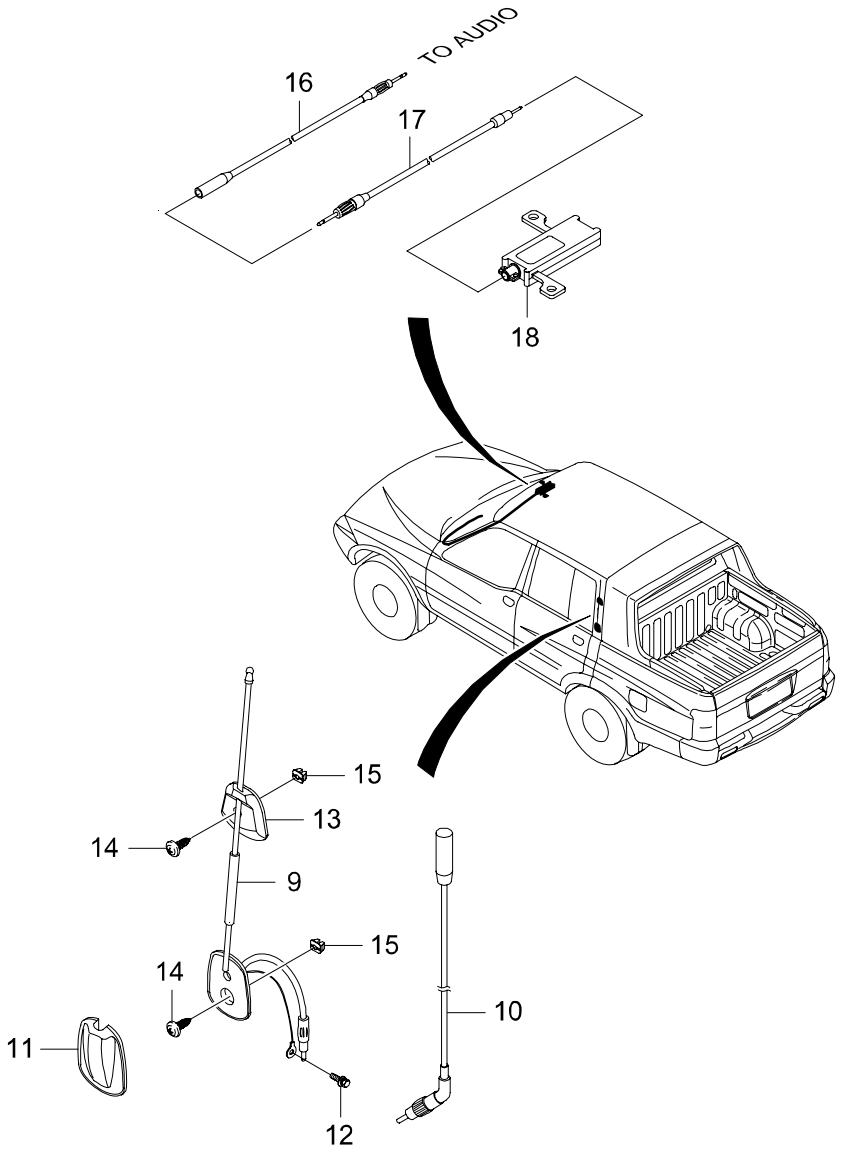

8920 ANTENNA

ITC	KEY NO. PART NO	PART NAME OPTION	L/R	T/M	DRV	MODEL 662LA									EFF. DATE FROM	EFF. DATE TO	REMARK
	[09]	*ANTENNA ASSY-MANUAL*															
	8940007000					1									02'1201	03'0129	
O	8940007001					1									03'0130	06'0228	
	[10]	*CABLE ASSY-ANTENNA*															
	8941007000					1									02'1201	06'0228	
	[11]	*COVER-BASE*															
	8940007010					1									02'1201	06'0228	
	[12]	*BOLT*															
	9900406000					1									02'1201	06'0228	M6X1.0X16
	[13]	*SUPT ASSY*															
	8940007020					1									02'1201	06'0228	
	[14]	*SCREW*															
	937045020B					2									02'1201	06'0228	M5X20
	[15]	*GROMMET*															
	9491105000					2									02'1201	06'0228	
	[16]	*CABLE-GLASS ANT FEEDER*															
	8942007010					1									03'1226	06'0228	2004M/Y,SUB ASSY INTO MAIN WIRING
	[17]	*CABLE-GLASS ANT FEEDER*															
	8942007020					1									03'1226	06'0228	2004M/Y,SUB ASSY INTO ROOF WIRING
	[18]	*MODULE ASSY-AM/FM ANTENA*															
	8942007000					1									03'1226	04'0411	2004M/Y
Y	8942007001					1									04'0412	05'0630	
Y	8942007002					1									05'0701	05'1231	

9110 O.V.M TOOL

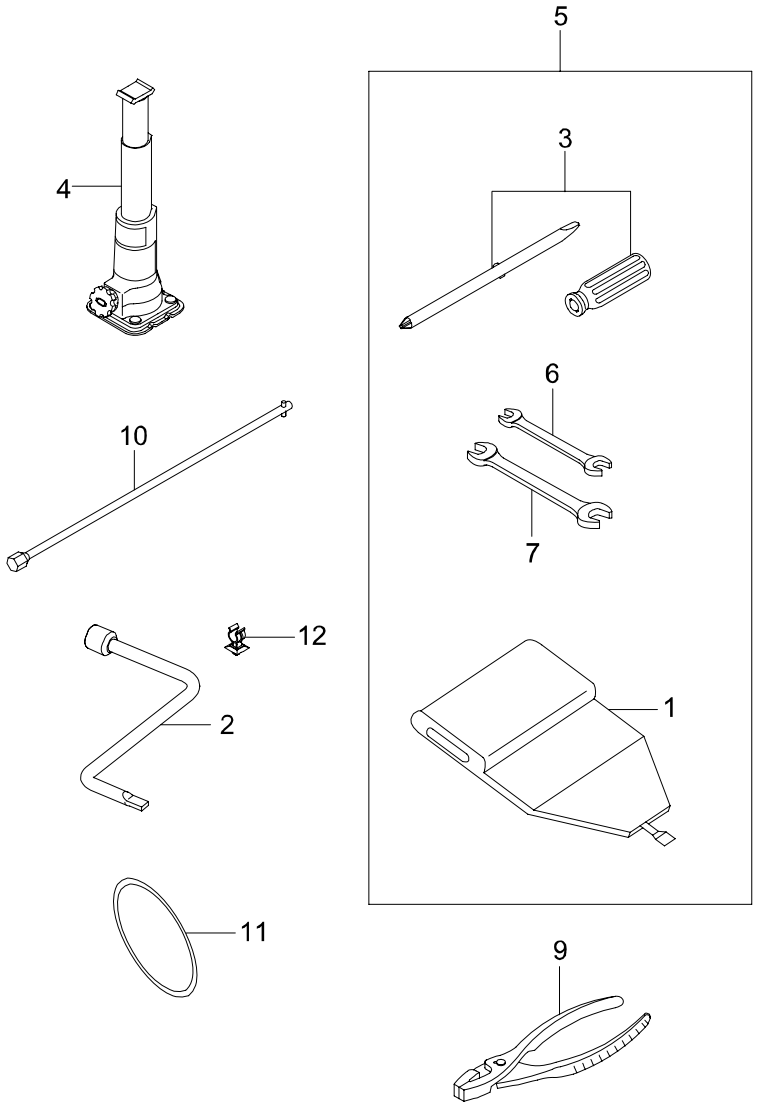

9110 - 01

9110 O.V.M TOOL

ITC	KEY NO. PART NO	PART NAME OPTION	L/R	T/M	DRV	MODEL 662LA									EFF. DATE FROM	EFF. DATE TO	REMARK
	[01] 0918005001	*BAG ASSY-OVM TOOL*				1									02'1201	06'0228	
	[02] 0912101001	*WRENCH-WHEEL NUT*				1									02'1201	06'0228	
	[03] 0914101000	*DRIVER*				1									02'1201	06'0228	
	[04] 0911005012	*JACK ASSY-SCREW*				1									02'1201	05'0608	
Y	0911005013					1									05'0609	05'0630	
Y	0911005014					1									05'0701	06'0228	
	[05] 0912005004	*TOOL & BAG ASSY*				1									02'1201	05'0628	
Y	0912005005					1									05'0629	06'0228	DELETED(GET OUT) PLIERS
	[06] 0915111000	*SPANNER*				1									02'1201	06'0228	10X12MM
	[07] 0915211000	*SPANNER*				1									02'1201	06'0228	14X17
	[09] 0913101000	*PLIERS*				1									02'1201	06'0228	8 INCH
	[10] 4083008000	*HANDLE ASSY-SPARE TIRE MTG*				1									02'1201	06'0228	L=690MM
	[11] 6615813086	*BAND-JACK MTG*				1									02'1201	06'0228	
	[12] 7809403500	*HOLDER-WHEEL NUT WRENCH*				2									02'1201	06'0228	

9210 OIL & ANTIFREEZE

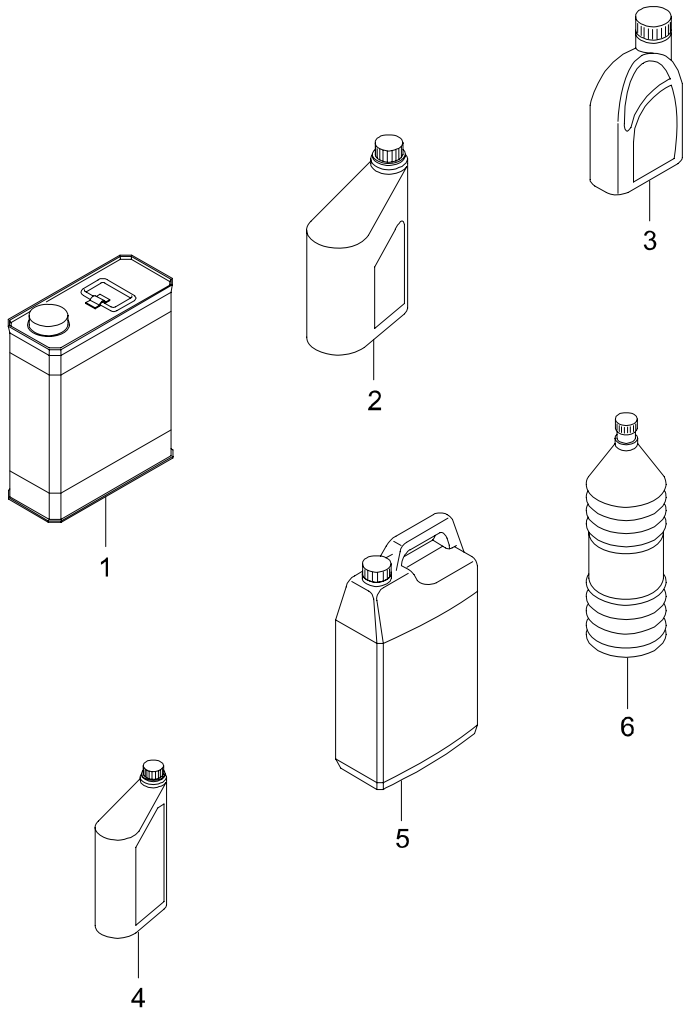

9210 OIL & ANTIFREEZE

ITC	KEY NO. PART NO	PART NAME OPTION	L/R	T/M	DRV	MODEL 662LA									EFF. DATE FROM	EFF. DATE TO	REMARK
	[01]	*OIL-ENGINE*															
	0000000378					1									02'1201	06'0228	1L
	0000000385					1									02'1201	06'0228	5L
	0000000390	MINERAL(MB SHEET 229.1)				1									02'1201	06'0228	4L
	0000000399	MINERAL(MB SHEET 229.1)				1									02'1201	06'0228	1L
	0000000450	SEMI-SYNTHETIC(MB SHEET 229.1)				1									02'1201	06'0228	1L
	0000000452	SEMI-SYNTHETIC(MB SHEET 229.1)				1									02'1201	06'0228	5L
	0000000454	100%SYNTHETIC(MB SHEET 229.3)				1									02'1201	06'0228	1L
	0000000456	100%SYNTHETIC(MB SHEET 229.3)				1									02'1201	06'0228	5L
	[02]	*OIL-T/M*															
	0000000284	P/STRG & T/M, T/C COMMON				1									02'1201	06'0228	1L,ISU/S-OIL
	0000000321	P/STRG & T/M, T/C COMMON				1									02'1201	06'0228	4L,ISU/S-OIL
	0000000381	P/STRG & T/M, T/C COMMON				1									02'1201	06'0228	1L
	0000000382	P/STRG & T/M , T/C COMMON				1									02'1201	06'0228	20L
	0000000384	P/STRG & T/M(-BTRA),T/C COMMON				1									02'1201	06'0228	20L,ISU/S-OIL
	0000000400	BTRA A/T ONLY		A		1									02'1201	06'0228	1L
	0000000430	BTRA A/T ONLY		A		1									02'1201	06'0228	4L
	[03]	*OIL-RR AXLE*															
	0000000538					1									02'1201	06'0228	ISU/S-OIL, 1L
	0000000580					1									02'1201	06'0228	ISU/S-OIL,20L
	0000000654					1									04'1115	06'0228	2WD LSD ONLY, 1L
	[04]	*OIL-BRAKE*															
	0000000117					1									02'1201	06'0228	0.5L
	0000000403					1									02'1201	06'0228	1L
	[05]	*ANTIFREEZE*															
	0000000200					1									02'1201	06'0228	2L
	0000000242					1									02'1201	06'0228	4L
	0000000243					1									02'1201	06'0228	20L
	[06]	*WASHER LIQUID*															
	0000000653					1									02'1201	05'0517	KUKDONG JEYEN, 1.8L