PARTS CATALOG

ROAD PARTNER
(WAGON TYPE)

ROAD PARTNER

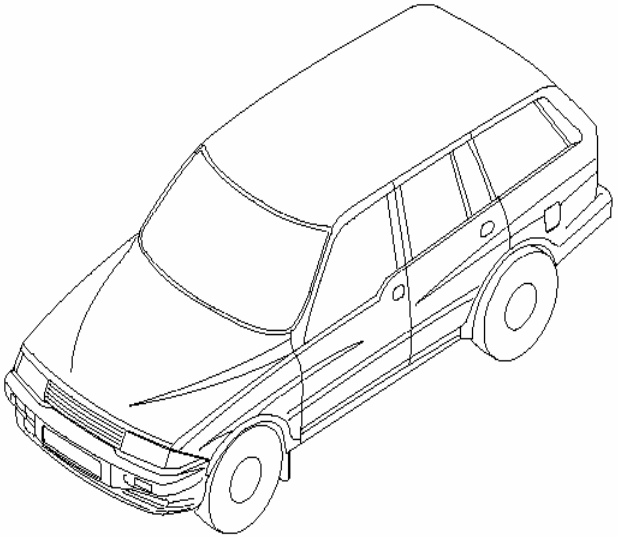

(WAGON TYPE)

INTRODUCTION

This parts catalogue provides service parts information for the "ROAD PARTNER" produced by TagAZ

All data and specifications contained in this parts catalogue are based on the latest product information available at the time of printing.

In order to make the best use of this parts catalogue, please be sure to read the "**GENERAL INFORMATION**" carefully.

CONTENTS

GENERAL INFORMATION

1. MODEL
2. COLOR CODE TABLE
3. EXPLANATION OF CATALOGUE COMPOSITION
4. CONSTRUCTION OF VEHICLE IDENTIFICATION
5. ABBREVIATIONS

INDEX

1. GROUP NO. INDEX
2. PART NAME INDEX
3. PART NO. INDEX
4. ILLUSTRATION INDEX

ILLUSTRATION & TEXT

1. ENGINE
2. FUEL & ENGINE CONTROL
3. TRANSMISSION
4. CHASSIS
5. BODY
6. BODY HANGON PARTS
7. INTERIOR & EXTERIOR
8. ELECTRICAL EQUIPMENTS
9. O.V.M. & ACCESSORY

1. MODEL

1-1. MODEL

MODEL	FUEL	ENGINE
G23D	GASOLINE	2.3DOHC, IL4
G32D		3.2DOHC, IL6

2. COLOR CODE

when order the color parts, the color code should be quoted.

EXTERIOR COLOR		INTERIOR COLOR
CODE	DESCRIPTION	

3. EXPLANATION OF CATALOGUE COMPOSITION

① 4110 AXLE SHAFT ②

KEY NO.		PART NAME										
⑧	⑦		ENGINE ⑥						APPLICATION			
ITC	PART NO.	T/M	G23D	G32D			OPTION	L/R	Q'TY	FROM	TO	REMARK
	③ [01]		KNUCKLE A-STEERING ④									
	41210 05110		S				2WD	L	1			
	41210 05003		S	S			4WD	L	1			
	41220 05110		S				2WD	R	1			
	41220 05003		S	S			4WD	R	1			
	⑤						⑨	⑩	⑪	⑫		

① **GROUP NO**
The first one digit indicates "MAIN GROUP NO." and next three digits indicate "SUB GROUP No."

② **SUB GROUP NAME**
This indicates the name of sub group within main group.

③ **KEY NO.**
Key number corresponds with the reference nu. On the illustration.
Key number is not always sequenced

④ **PART NAME**
Part name is indicated main name in front and its supplementry in rear.

⑤ **PART NO.**
The number assigned to each part

⑥ **ENGINE**
This column indicates Engine type

■ Engine Type
G23D : 2.3L DOHC, In-Line 4 Cyl.
G32D : 3.2L DOHC, In-Line 6 Cyl.

⑦ **TRANSMISSION**
This column indicates Transmission type

■ Transmission Type
M : Manual Transmission
A : Automatic Transmission

⑧ **ITC (INTERCHANGEABILITY CODE)**
ITC indicates the interchangeability between two part numbers when any part number has been changed due to design modification.

■ Interchangeability Symbols
Y : The old part and the new one are interchangeable.
N : The old part and the new one are not mutually interchangeable.
O : The new part can be used for the old one but the reverse is not possible.

⑨ **OPTION**
This column indicates option name/code

⑩ **L/R**

This column indicates the mounting position of a part

L : Left hand side

R : Right hand side

B : Both hand side

⑪ **Q'TY**

This column indicates the quantity required per sub group.

The quantity is normally shown by number or symbol as below.

A : As required quantity

⑫ **APPLICATION**

This column indicates effective timing of first application after design modification.

4. CONSTRUCTION OF VEHICLE IDENTIFICATION

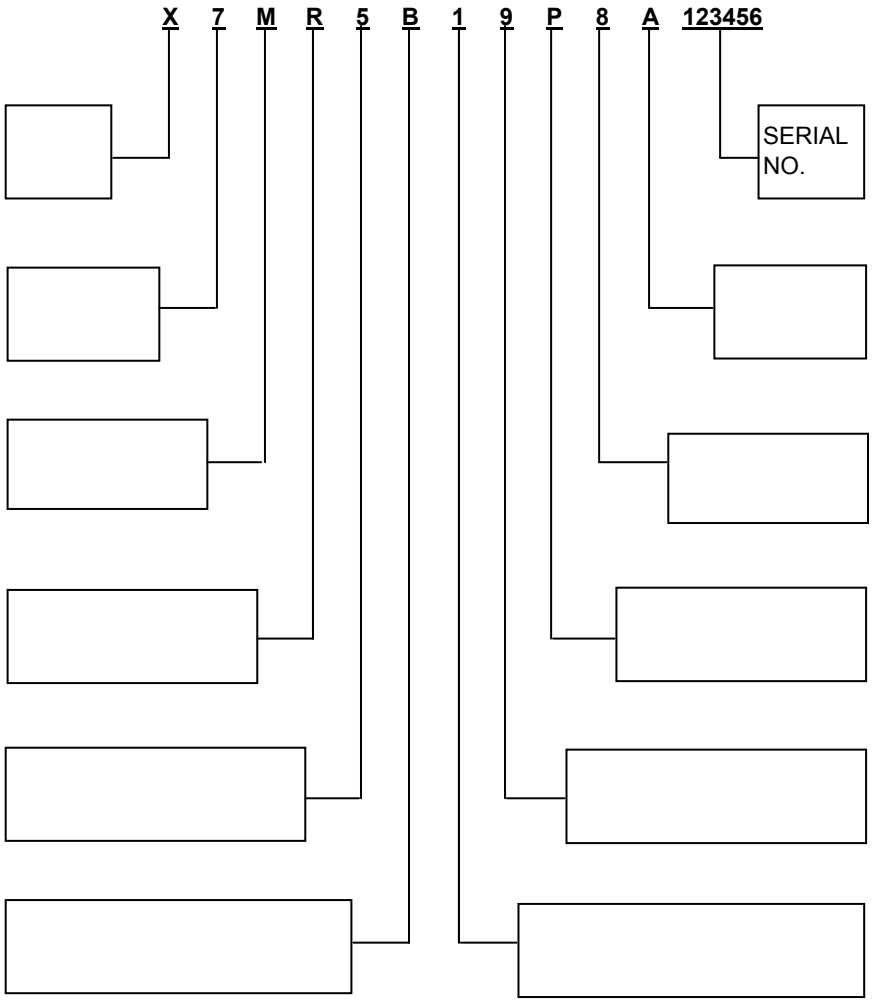

5. ABBREVIATION TABLE

ABBR.	DESCRIPTION	ABBR.	DESCRIPTION	ABBR.	DESCRIPTION
&	TOGETHER WITH	**CRS**	LAMP-ROOM, FRONT(SUNROOF)	**IACV**	IDLE AIR CONTROL VALVE
-	EXCEPT	**CTR**	CENTER,-RAL	**IGN**	IGNITION
/	OR	**CUSH**	CUSHION	**IMMO**	IMMOBILIZER
1ST	FIRST	**CYL**	CYLINDER	**INCL**	INCLUDING
2ND	SECOND	**DIFF**	DIFFERENTIAL	**INL**	INLET
3RD	THIRD	**DIR**	DIRECT,-TION	**INR**	INNER
A	ASSEMBLY	**DIS**	DIRECT IGNITION SYSTEM	**INST**	INSTRUMENT
A / BAG	AIRBAG SYSTEM-DRIVER	**DISTR**	DISTRIBUTOR-TION	**INT**	INTAKE
A/C	AIR CONDITIONER,-ING	**DLX**	DELUXE	**INTER**	INTERMIDIATE
A/CON	AIIR CONEITIONER	**DR**	DOOR	**L/COMPT**	LOAD COMPARTMENT
A/T	AUTO TRANSMISSION	**DRL**	DAY TIME RUNNING LIGHT	**L/DEVICE**	HEAD LAMP LEVELING DEVICE
ABD	TRACTION CONTROL SYSTEM	**DSL**	SUNSHADE-W/MIRROR ILLUMINATION	**L/PLATE**	LICENSE PLATE
ABS	ANTI-LOCK BRAKE SYSEM	**DSP**	EQUALIZER-DIGITAL SIGNAL PROCESSOR	**LEADED**	EMISSION-LEADED
ACCEL	ACCELERATOR	**E/MANIF**	EXHAUSTMANIFOLD	**LONGI**	LONGITUDINAL
AL	ALUMINUM	**ECM**	ELECTRONIC CONTROL MODULE	**LWR**	LOWER
ALLOY	WHEEL ALLOY	**ECS**	ELECTRONIC CONTROL SUSPENSION	**M/T**	MANUAL TRANSMISSION
ATAS	ANTI THEFT ALARM SYSTEM	**ELEC**	ELECTRIC,-CAL	**MANIF**	MANIFOLD
BTSI	BRAKE TRANSMISSION SHIFT INTERLOCK	**ENG**	ENGINE	**MAP**	MANIFOLD AIR PRESSURE
C/G	CROSS GROOVE	**ENGY**	ENERGY	**MAT**	MANIFOLD AIR TEMPERATURE
C/MBR	CROSS MEMBER	**EXH**	EXAHUST	**MBR**	MEMBER
C/V	CONSTANT VELOCITY	**EXPN**	EXPANSION	**MOD**	MODULE
CATAL	CATALYTIC CONVERTER	**EXTN**	EXTENSION	**MT**	MOUNTED-ING
CD	COMPACT DISC	**F/PNL**	FLOORPANEL	**N/S**	NO LONGER SERVICED
CLU	CLUTCH	**FAW**	WARNING TRIANGLE(DEALEROPTION)	**NEU**	NEUTRAL
CM / SHF	CAM SHAFT	**FC0**	FUELCUT OFF SWITCH	**NSBU**	NEUTRAL START BRAKE UNIT
CMPR	COMPRESSOR,-SION	**FDG**	FEEDING	**O/S**	OUTSIDE, OVERSIZE
CNSL	CONSOLE	**FLR**	FLOOR	**OBD**	ON BOARD DIAGNOSTIC
COMB	COMBINATION	**FRT**	FRONT	**OPG**	OPENING
COMPL	COMPLETE	**FWD**	FORWARD	**OTLT**	OUTLET
COMMPT	COMPARTMENT	**G/S**	GEARSHIFT	**OTR**	OUTER
CONN	CONNECTING,-TOR,-NECT	**HARN**	HARNESS	**OVM**	OWNER'S VEHICLE MAINTENANCE TOOL
CONT	CONTROL	**HYD**	HYDRAULIC	**P/BRAKE**	PARKING BRAKE
CONV	CONVERTER	**I/MANIF**	INTAKE MANIFOLD	**P/SEAT**	POWER SEAT, DRIVER SIDE-LEATHER
CPS	CRANK POSITION SENSOR	**I/P**	INSTRUMENT PANEL	**P/STRG**	POWER STEERING
CR / SHF	CRANK SHAFT	**I/S**	INSIDE	**P/WDO**	POWER WINDOW

5. ABBREVIATION TABLE

ABBR.	DESCRIPTION	ABBR.	DESCRIPTION	ABBR.	DESCRIPTION
PARK	PARKING	**T/BODY**	THROTTLE BODY		
PASS	PASSENGER	**T/GATE**	TAIL GATE		
PCB	PRINTED CIRCUIT BOARD	**T/LID**	TRUNK LID		
PNL	PANEL	**T/M**	TRANSMISSION		
PRIM	PRIMARY	**T/P**	TRI POT		
PROTV	PROTECTIVE	**T/SIG**	TURN SIGNAL		
PWR	POWER	**T/W**	TOGETHER WITH		
RAD	RADIATOR	**TCC**	TORQUE CONVERTER CLUTCH		
RDS	CASSETTE(25X4CH) & RADIO DATA SYSTEM, STD	**TCM**	TRANSMISSION CONTROL MODULE		
RECL	RECLINER,-ING	**TCP**	TRAILER PACKAGE (DEALER OPTION)		
REF	REFRIGERANT	**TEMP**	TEMPERATURE		
REINF	REINFORCEMENT	**THER**	THERMAL		
REV	REVERSE	**TILT**	TILTABLE		
RKE	REMOTE KEY(ENTRY SYSTEM)	**TLD**	TRUNK LID HANDLE-CHROME COATING		
RR	REAR	**TXV**	THERMAL EXPANSION VALVE		
RTN	RETURN	**U/S**	UNDER SIZE		
S/ABS	SHOCK ABSORBER	**UNLEADE**	EMISSION-UNLEADED(KOREA'90)		
S/BACK	SEAT BACK	**UPR**	UPPER		
S/BELT	SEAT BELT	**VENT**	VRNTILATED, TION,-TOR		
S/COL	STEERING COLUMN	**VGIS**	VARIABLE GAS INDUCTION SYSTEM		
S/ROOF	SUN ROOF, POWER	**W/**	WITH		
S/W	SWITCH	**W/GRAIN**	WOOD GRAIN TRIM		
SDM	SENSING & DIAGNOSTIC MODULE	**W/H**	WHEEL HOUSE		
SECD	SECONDARY	**W/HARNE**	WIRING HARNESS		
SHF	SHAFT	**W/O**	WINDSHIELD		
SIR	SUPPLEMENTAL INFLATE	**W/STRIP**	WEATHER STRIP		
SKL	LEATHER T/M KNOB(A/T)	**WDO**	WINDOW		
SOL	SOLENOID	**XCK**	STD CORROSION SPEC		
STD	STANDARD	**XCP**	SHEET METAL-COATED		
STRG	STEERING				
SUCT	SUCTION				
SUPT	SUPPORT-,ING				
SYN	SYNCHRONIZER				
T.R	BELT-SEAT, PRETENSIONER , FRT				
T/A	TRANSAXLE				

GROUP NO. INDEX

GROUP NO. INDEX

1 ENGINE

1112 ENGINE UNIT - G23D
1113 ENGINE UNIT - G32D
1123 CYLINDER BLOCK-G23D
1124 CYLINDER BLOCK-G32D
1130 CRANKSHAFT & FLYWHEEL
1211 CYLINDER HEAD & GASKET KIT
1221 CYLINDER HEAD COVER & CAMSHAFT
1311 CHAIN DRIVE
1331 TIMING CASE - G23D
1332 TIMING CASE - G32D
1350 BELT SYSTEM
1411 ENGINE WIRING
1430 SENSOR
1440 IGNITION COIL - G23D
1441 IGNITION COIL - G32D
1452 ALTERNATOR
1453 ALTERNATOR MOUNTING
1462 STATING MOTOR
1490 EMISSION MODULE
1521 COOLING SYSTEM - G23D
1522 COOLING SYSTEM - G32D
1531 OIL PAN & PUMP - G23D
1532 OIL PAN & PUMP - G32D
1541 OIL FILTER - G23D
1542 OIL FILTER - G32D
1623 VACUUM SYSTEM - G23D
1624 VACUUM SYSTEM - G32D
1712 INTAKE MANIFOLD - G23D
1713 INTAKE MANIFOLD - G32D
1722 EXHAUST MANIFOLD - G23D
1842 INJECTION CONTROL SYSTEM-G23D
1843 INJECTION CONTROL SYSTEM-G32D
1990 ENGINE MOUNTING
1723 EXHAUST MANIFOLD - G32D

2 FUEL/ ENGINE CONTROL SYSTEM

2010 ACCELERATOR CONTROL
2111 RADIATOR
2120 COOLING FAN
2130 RADIATOR HOSE & PIPE
2210 FUEL TANK
2220 FUEL LINE
2312 AIR CLEANER
2421 EXHAUST SYSTEM-G23D
2422 EXHAUST SYSTEM-G32D
2610 BATTERY & CABLE

3 TRANSMISSION

3010 MANUAL TRANSMISSION CLUTCH DISC
3020 CLUTCH CONTROL
3030 CLUTCH PEDAL
3110 TRANSMISSION(AT&MT) & TCU CONTROL SYTEM
3140 MANUAL TRANSMISSION-4WD
3141 CLUTCH HOUSING-4WD
3142 OUTPUT & INPUT SHAFT-4WD
3143 COUNT SHAFT GEAR-4WD
3144 ADAPTOR-4WD
3145 RAIL & SHIFTFORK-4WD
3146 SHIFTER & EXTENTION-4WD
3160 MANUAL TRANSMISSION - 2WD
3161 CLUTCH HOUSING-2WD
3162 OUTPUT & INPUT SHAFT-2WD
3163 COUNT SHAFT GEAR-2WD
3164 ADAPTOR -2WD
3165 RAIL & SHIFT FORK-2WD
3166 SHIFT & EXTENSION-2WD
3176 SHIFTER & LEVEL-2WD
3210 TRANSFER CASE-PART TIME
3211 TRANSFER CASE-PART TIME
3212 TRANSFER CASE-PART TIME
3310 PROPELLER SHAFT
3610 AUTOMATIC TRANSMISSION,4WD (DSI M74)
3611 CONVERTER HOUSING & OIL PAN (DSI M74)
3612 TRANSMISSION HOUSING(DSI M74)
3613 VALVE BODY(DSI M74)
3614 OIL PAN(DSI M74)
3615 CLUTCH(DSI M74)
3616 OUTPUT SHAFT(DSI M74)
3710 MANUAL SHIFT CONTROL
3740 AUTO SHIFT CONTROL
3750 AUTO COOLING SYSTEM

4 CHASSIS

4010 FRAME
4110 AXLE SHAFT
4115 FRONT HUB & DISC
4116 LOCKING HUB
4121 FRONT AXLE
4170 TIRE & WHEEL DISC
4180 ACCESSORIES TO FRAME
4211 REAR AXLE
4310 FRONT AXLE MOUNTING
4410 FRONT SUSPENSION
4411 FRONT SHOCK ABSORBER

GROUP NO. INDEX

4420 STABILIZER BAR
4511 REAR SHOCK ABSORBER
4611 STEERING WHEEL
4613 STEERING COLUMN
4620 STEERING GEAR LINKAGE
4641 POWER STEERING PIPE LINE
4810 BRAKE PEDAL
4821 BRAKE PIPE(ABS 5.3)
4830 FRONT BRAKE
4841 REAR BRAKE(DISC)
4850 MASTER & BOOSTER CYLINDER
4890 ABS SYSTEM(5.3)
4891 HYDRAULIC MODULATOR(ABS 5.3)
4910 PARKING BRAKE

5 BODY

5110 BODY IN WHITE
5120 BODY MOUNTING
5210 SIDE & REAR BODY
5230 A PILLAR
5240 B PILLAR
5510 ROOF PANEL
5610 FRONT FLOOR PANEL
5620 REAR FLOOR PANEL
5710 FRONT PANEL
5720 FENDER & APRON PANEL
5730 DASH PANEL & COWL

6 BODY HANGON PARTS

6110 HOOH PANEL
6210 FRONT DOOR PANEL
6310 REAR DOOR PANEL
6410 TAIL GATE PANEL
6810 AIR CONDITIONER KIT
6820 AIR CONDITIONER HOSE & PIPE LINE
6830 AIR DISTRIBUTOR
6840 EVAPORATOR
6850 CONDENSER

7 INTERRIOR & EXTERIOR

7010 KEY SET
7090 FUEL FILLER DOOR LOCK
7110 FRONT DOOR OPENING SYSTEM
7115 FRONT DOOR TRIM
7120 FRONT WINDOW LIFTER
7121 FRONT WEATHER STRIP
7210 REAR DOOR OPENING SYSTEM
7215 REAR DOOR TRIM
7220 REAR WINDOW LIFTER
7221 REAR WEATHER STRIP
7310 TAIL GATE LOCK
7330 HEADLINING
7410 FRONT SEAT
7420 FRONT SEAT PARTS
7430 FRONT SEAT BELT
7440 SEAT GUIDE RAIL
7510 REAR SEAT
7520 REAR SEAT PARTS
7530 REAR SEAT BELT
7610 INSTRUMENT PANEL
7630 CONSOLE
7720 FRONT FLOOR CARPET
7730 PILLAR TRIM
7740 LUGGAGE TRIM
7770 SUNSHADE & INSIDE MIRROR
7810 WINDSHIELD WIPER
7820 WINDSHIELD WASHER
7830 REAR WINDOW WIPER
7840 GLASS
7850 OUTSIDE MIRROR
7870 FRONT BUMPER
7880 REAR BUMPER
7910 RADIATOR GRILLE
7920 MUD GUARD
7930 SIDE BODY MOULDING
7940 REAR BODY MOULDING
7950 EMBLEM & LETTERING

8 ELECTRICAL EQUIPMENTS

8010 INSTRUMENT CLUSTER
8210 WIRING
8310 FRONT LAMP
8320 REAR LAMP
8410 FUSE & RELAY
8510 SWITCH
8610 ELECTRICAL PARTS
8810 AIR BAG SYSTEM
8910 AUDIO SYSTEM
8920 ANTENNA

GROUP NO. INDEX

9 O.V.M. & ACCESSORY

9110 JACK A & OVM TOOL

9210 OIL & ANTI FREEZE

PART NAME INDEX

PART NAME INDEX

PART NANE	GROUP NO.		PART NANE	GROUP NO.		PART NANE	GROUP NO.		PART NANE	GROUP NO.	
2WAY CHECK VALVE	2220	7	BALL	1124	13	BEARING-NEEDLE	3615	20	BOLT	1112	3
2WAY CONN-BRAKE TUBE	4821	9	BALL STUD	6410	16	BEARING-NEEDLE	3616	17	BOLT	1112	6
A/REST A-CENTER,DLX	7510	23	BALL-LOCKER	1211	5	BEARING-NEEDLE	3616	18	BOLT	1112	7
ACTUATOR A-DR LOCK(RR)	7210	14	BALL-LOCKER	1211	10	BEARING-NEEDLE	3616	19	BOLT	1112	8
ACTUATOR A-INTAKE	6810	20	BALL-NYLON	3613	14	BEARING-NEEDLE	3616	20	BOLT	1113	7
ADAPTER ASSY	1440	6	BALL-STEEL	3142	35	BEARING-NEEDLE,5TH	3142	31	BOLT	1123	3
ADAPTOR ASSY-FRT	3211	02	BALL-STEEL	3162	39	BEARING-NEEDLE,5TH	3162	31	BOLT	1124	3
ADAPTOR-T/M	3143	01	BALL-STEEL	3164	06	BEARING-NEEDLE,IDLER	3143	07	BOLT	1124	4
ADAPTOR-T/M	3144	01	BAND	4641	11	BEARING-NEEDLE,IDLER	3144	07	BOLT	1130	27
ADAPTOR-T/M	3164	01	BAND	6820	17	BEARING-NEEDLE,IDLER	3164	07	BOLT	1211	7
ADJUSTER ASSY	1311	18	BAND	7090	5	BEARING-NEEDLE,REV.	3142	26	BOLT	1211	11
AIR BAG A-DRIVE	8810	1	BAND-BOOT	4010	13	BEARING-NEEDLE,REV.	3162	26	BOLT	1311	10
AIR BREATHER ASSY	4121	35	BAND-BOOT	4010	14	BEARING-NEEDLE1ST&2ND&3RD	3142	12	BOLT	1311	20
AIR BREATHER ASSY	4211	33	BAND-BOOT	4010	15	BEARING-NEEDLE1ST&2ND&3RD	3162	12	BOLT	1311	27
AIR-BREATHER	3146	03	BAND-FRT	3616	25	BEARING-NEELDLE	3615	17	BOLT	1331	10
AIR-BREATHER	3166	03	BAND-FRT	3616	25	BEARING-ROLLER,C/S	3146	23	BOLT	1331	13
ALLOY WHL	4170	2	BAND-RR	3616	26	BEARING-SLEEVE	3211	19	BOLT	1331	15
ALTERNATOR ASSY	1452	1	BAR A-RR STABILIZER	4511	19	BEARING-SLEEVE	3212	39	BOLT	1331	17
AMP A-THERMO	6840	29	BASKET	1531	5	BEARING-TAPER ROLLER,MAIN	3142	02	BOLT	1331	18
ANCHOR-STRUT	3612	59	BASKET	1532	5	BEARING-TAPER ROLLER,MAIN	3162	02	BOLT	1331	24
ANTENNA A-IMMOBILIZER	7010		BATTERY A-72-31FR(SB)	2610	1	BEARING-TAPER ROLLER,PILOT	3142	04	BOLT	1332	3
ARM & BUSH A-RR LWR ARM	4511	13	BEARING	3211	09	BEARING-TAPER ROLLER,PILOT	3162	04	BOLT	1332	4
ARM & BUSH A-RR UPR	4511	11	BEARING	3211	18	BELT-POLY GROOVED	1350	1	BOLT	1332	7
ARM A-FRT SUSP LWR	4411	8	BEARING	3212	04	BEZEL A-DR INSIDE	7110	9	BOLT	1332	11
ARM A-FRT SUSP UPR	4410	1	BEARING	3212	19	BEZEL A-DR INSIDE	7210	9	BOLT	1332	13
ARM A-HEIGHT CONTROL	4420	11	BEARING A-FRT HUB INR	4115	6	BIW COMPL-H/ON	5110	1	BOLT	1332	16
ARM A-RR WIPER	7830	1	BEARING A-FRT HUB OTR	4115	7	BLADE A-RR WIPER	7830	3	BOLT	1332	18
ARM A-WINDSHIELD WIPER	7810	2	BEARING GROOVED BALL	1452	4	BLADE A-WINDSHIELD WIPER	7810	3	BOLT	1453	5
ARM REST A-CONSOLE	7630	11	BEARING GROOVED BALL	1452	5	BLADE A-WINDSHIELD WIPER	7810	4	BOLT	1521	6
ARMATURE	1311	29	BEARING KIT-CONNECTING ROD	1130	32	BLANK'G COVER-S/SENSOR	7610	13	BOLT	1521	8
ARM-FRT SUSP TORQUE	4420	9	BEARING SET-CRANKSHAFT	1130	23	BLANKING COVER-AUDIO	8910	11	BOLT	1521	15
ASH TRAY A-CONSOLE,REAR	7630	13	BEARING SET-THRUST	1130	24	BLANKING COVER-REAR CUP HOLDER	7630	7	BOLT	1521	19
ASH TRAY A-FRT(-W/G)	7610	33	BEARING-BALL	3162	37	BLOCK ASSY-CYL.MECH	1124	1	BOLT	1521	20
AXLE ASSY-FRT	4121	1	BEARING-CLUTCH RELEASE	3010	3	BLOCK ASSY-CYLINDER	1123	1	BOLT	1521	21
AXLE ASSY-RR	4211	1	BEARING-CONNECTING ROD STD LWR	1130	31	BLOT	3612	33	BOLT	1521	22
AXLE SHAFT ASSY	4211	38	BEARING-CONNECTING ROD STD UPR	1130	30	BLOT	3612	62	BOLT	1521	23
B/COVER-CTR FACIA S/W	8510	14	BEARING-GROOVED BALL	1130	21	BODY A-S/WHEEL	4611	2	BOLT	1522	7
BADGE-HOOD	7950	28	BEARING-HUB	4121	37	BODY ASSY-VALVE	3613	01	BOLT	1522	14
BADGE-TAIL GATE	7950	27	BEARING-HUB	4211	44	BODY ASSY-VALVE	3613	01	BOLT	1522	19
BAG A-O.V.M TOOL	9110	4	BEARING-NEEDLE	3212	52	BOLL-STEEL	3143	06	BOLT	1522	22
BALL	1123	9	BEARING-NEEDLE	3611	22	BOLL-STEEL	3144	06	BOLT	1522	28

PART NAME INDEX

PART NANE	GROUP NO.		PART NANE	GROUP NO.		PART NANE	GROUP NO.		PART NANE	GROUP NO.	
BOLT	1522	31	BOLT-BACK PLATE MTG.	4211	49	BOLT-FLANGE	3161	04	BOLT-HEX SEMS	5120	25
BOLT	1522	33	BOLT-BATT CLAMP	2610	3	BOLT-FLANGE	3166	02	BOLT-HEX SEMS	6410	33
BOLT	1531	3	BOLT-C/MBR MTG	4310	8	BOLT-FLANGE	3166	21	BOLT-HEX SEMS	6850	23
BOLT	1531	13	BOLT-CALIPER MTG RR	4841	7	BOLT-FLANGE	3166	27	BOLT-HEX SEMS	7410	21
BOLT	1531	16	BOLT-CARRIER COVER	4121	31	BOLT-FLANGE	4211	35	BOLT-HEX SEMS	7410	22
BOLT	1531	23	BOLT-CARRIER COVER	4211	26	BOLT-FLANGE	5720	2	BOLT-HEX SEMS FOR NO.21 MTG	4821	28
BOLT	1531	25	BOLT-CLAMP MTG	7010	5	BOLT-FLANGE	6110	4	BOLT-HEX,SEMS	3144	12
BOLT	1531	26	BOLT-COMB	1113	3	BOLT-FLG NYLON	3710	5	BOLT-HEX.SEMS	3164	12
BOLT	1531	34	BOLT-COMB	1221	3	BOLT-FLYWHEEL MTG	1130	17	BOLT-HEXAGON SEMS	7440	2
BOLT	1531	36	BOLT-COMB	1221	4	BOLT-GEAR MTG	4620	7	BOLT-HEXAGON SEMS	7510	21
BOLT	1532	3	BOLT-COMB	1221	10	BOLT-HEX	2421	22	BOLT-HEXAGON SEMS	7520	42
BOLT	1532	16	BOLT-COMB	1532	13	BOLT-HEX	2422	22	BOLT-HEXAGON SEMS	7870	15
BOLT	1532	23	BOLT-COMB	1532	25	BOLT-HEX	3030	28	BOLT-HEXAGON SEMS	7870	16
BOLT	1542	16	BOLT-COMB	1532	27	BOLT-HEX	4410	14	BOLT-HEXAGONANGE	7220	19
BOLT	1542	26	BOLT-COMB	1532	30	BOLT-HEX	4411	23	BOLT-INTER LOCK	3141	2
BOLT	1712	3	BOLT-COMB	1532	31	BOLT-HEX	4511	28	BOLT-INTER LOCK	3161	02
BOLT	1712	9	BOLT-COMB	1542	12	BOLT-HEX	4511	30	BOLT-JOINT	4613	7
BOLT	1713	2	BOLT-COMB	1542	22	BOLT-HEX	4411	19	BOLT-LOCKING HUB MTG	4116	22
BOLT	1723	11	BOLT-COMB.	1453	3	BOLT-HEX FLANGE	7110	23	BOLT-PROPELLER SHAFT	3310	2
BOLT	1842	2	BOLT-COMB.	1453	4	BOLT-HEX FLANGE	7120	10	BOLT-PROPELLER SHAFT	3310	5
BOLT	1842	10	BOLT-COMB.	1453	8	BOLT-HEX FLANGE	7210	23	BOLT-REVERSE LOCK	3145	15
BOLT	1843	2	BOLT-COMB.	1123	16	BOLT-HEX FLG	2312	9	BOLT-REVERSE LOCK	3165	15
BOLT	3211	06	BOLT-COMB.	1124	18	BOLT-HEX FLG	4410	12	BOLT-RING GEAR	4121	18
BOLT	3212	29	BOLT-COMB.	1430	3	BOLT-HEX FLG	4611	13	BOLT-SOCKET	3010	4
BOLT	3212	47	BOLT-COMB.	1430	6	BOLT-HEX FLG	6410	34	BOLT-STUD	1211	9
BOLT	3611	34	BOLT-COMB.	1441	5	BOLT-HEX FLG	6820	24	BOLT-STUD	1722	9
BOLT	3611	36	BOLT-COMB.	1453	2	BOLT-HEX FLG	6850	24	BOLT-TORQUE ARM	4420	15
BOLT	3611	37	BOLT-COMBI	1332	20	BOLT-HEX SEMS	1990	8	BOLT-TORQUE ARM	4420	16
BOLT	3611	38	BOLT-COMBI	6820	3	BOLT-HEX SEMS	3020	9	BOLT-TORSION BAR H/CONTROL	4420	14
BOLT	3611	47	BOLT-CONNECTING	1124	20	BOLT-HEX SEMS	3310	6	BOLT-W/WAVE	3010	7
BOLT	3613	10	BOLT-CRK/SHT,CTR	1130	8	BOLT-HEX SEMS	3710	12	BOLT-WHEEL	4211	40
BOLT	4010	9	BOLT-CUP SQ	5120	13	BOLT-HEX SEMS	4115	13	BOOSTER A-POWER BRAKE	4850	1
BOLT	4830	4	BOLT-DUST SHIELD	4841	8	BOLT-HEX SEMS	4180	8	BOOSTER A-POWER BRAKE	4850	6
BOLT	7440	3	BOLT-EARTH-7-D	2610	15	BOLT-HEX SEMS	4411	15	BOOT	4010	11
BOLT	7520	13	BOLT-EYE	3750	2	BOLT-HEX SEMS	4420	17	BOOT	4010	12
BOLT	1113	6	BOLT-FLANGE	1211	12	BOLT-HEX SEMS	4514	25	BOOT A-FRONT CONSOLE,M/T(SEMI)	7630	5
BOLT	1332	9	BOLT-FLANGE	1311	30	BOLT-HEX SEMS	4511	32	BOOT A-T.G.S	3710	4
BOLT	1440	2	BOLT-FLANGE	1722	6	BOLT-HEX SEMS	4613	5	BOOT KIT-P/STRG GEAR BOX	4620	11
BOLT A-FRT AXLE MTG FRT	4310	1	BOLT-FLANGE	3141	4	BOLT-HEX SEMS	4810	13	BOOT SET-INNER	4010	18
BOLT A-FRT AXLE MTG RR	4310	6	BOLT-FLANGE	3146	02	BOLT-HEX SEMS	4910	8	BOOT SET-OUTER	4010	19
BOLT ASSY	4121	4	BOLT-FLANGE	3146	19	BOLT-HEX SEMS	5120	7	BOOT-CLUTCH RELEASE FORK	3141	14

PART NAME INDEX

PART NANE	GROUP NO.	
BOOT-CLUTCH RELEASE FORK	3161	14
BOX A-CLUTCH PEDAL	3030	1
BOX A-FUSE	8210	2
BOX A-FUSIBLE LINK	2610	7
BOX A-GLOVE	7610	21
BOX A-RELAY(CABIN)	8210	4
BOX A-RELAY(ENG)	8210	8
BPR NO.2-T/GATE GUIDE	6410	3
BPR-T/GATE GUIDE	6410	18
BRACKET	1430	5
BRACKET	1532	33
BRACKET ASSY-BEARING	1842	1
BRACKET ASSY-BEARING	1843	1
BRACKET IGNITION	1440	14
BRACKET-BACK LAMP SWITCH	3146	18
BRACKET-BACK LAMP SWITCH	3166	26
BRACKET-COOLANT COVER	1522	13
BRACKET-COOLING FAN	1332	17
BRACKET-ENG HANGER FRT	1113	4
BRACKET-ENGINE HANGER FRT	1112	4
BRACKET-ENGINE HANGER RR	1112	5
BRACKET-ENGINE MOUNTING	1112	2
BRACKET-EXHAUST MANIFOLD ATT/M	1722	8
BRACKET-FUEL PUMP RELAY	1430	12
BRACKET-IDLER PULLEY	1331	12
BRACKET-IDLER PULLEY	1332	15
BRACKET-OIL STRAINER	1531	39
BRACKET-OIL STRAINER	1532	24
BRACKET-PURGE CONTROL VALVE	1623	9
BRACKET-PURGE CONTROL VALVE	1624	9
BRAKE ASSY-DISC,PARKING	4211	52
BRAKE ASSY-RR DRUM	4841	12
BRAKET A-GAUGE MOUNTING NO.1	7610	25
BRAKET A-GLOVE BOX MOUNTING	7610	22
BRAKET A-REAR DOOR TRIM	7215	8
BREATHER	3211	05
BREATHER	3612	35
BRG.-DIFF SIDE	4121	7
BRG.-PINION,INNER	4121	19
BRG.-PINION,INNER	4211	12
BRG-DIFF. SIDE	4211	23

PART NANE	GROUP NO.	
BRG-PINION.OUTER	4121	23
BRG-PINION.OUTER	4211	16
BRG-TAPER ROLLER,C/S	3143	02
BRG-TAPER ROLLER,C/S	3163	02
BRK`T-IDLER	3144	09
BRK`T-IDLER	3164	09
BRKT	1441	6
BRKT A-A/CLNR MTG	2312	21
BRKT A-ABS 5.3 MODUL MTG	5720	15
BRKT A-ABS 5.3 MODUL MTG	5720	30
BRKT A-AIR/CLEANER MTG #1	5720	32
BRKT A-BLOWER MTG	5730	12
BRKT A-BODY MTG #1	5720	6
BRKT A-BODY MTG #1	5720	27
BRKT A-BODY MTG 2	4010	26
BRKT A-BODY MTG 2	4010	27
BRKT A-BODY MTG 3	4010	28
BRKT A-BODY MTG 3	4010	29
BRKT A-BODY MTG 4	4010	30
BRKT A-BODY MTG NO.5	4010	31
BRKT A-BODY MTG NO.5	4010	32
BRKT A-BODY MTG NO.6	4010	33
BRKT A-BUMPER MTG	4010	49
BRKT A-CANISTER MTG	5720	18
BRKT A-CENTER SUPPOT	7610	20
BRKT A-CLUTCH PEDAL BOX MTG	5730	3
BRKT A-CLUTCH PEDAL MTG	3030	2
BRKT A-CONSOLE REAR LOWER	7630	10
BRKT A-CONSOLE REAR UPPER MTG	7630	9
BRKT A-CONSOLE,FRONT	7630	17
BRKT A-CRASH PAD SIDE MOUNTING	7610	14
BRKT A-CRASH PAD SIDE MTG	7610	14
BRKT A-DOOR CHECKER MTG	6210	4
BRKT A-DOOR CHECKER MTG	6310	4
BRKT A-ENG MTG FRT	4010	14
BRKT A-ENG MTG FRT	4010	15
BRKT A-FENDER MTG	5720	5
BRKT A-FENDER MTG	5720	26
BRKT A-FOOT REST	5610	4
BRKT A-FRONT BUMPER SIDE MTG	7870	3
BRKT A-FRT AXLE MTG FRT	4010	19

PART NANE	GROUP NO.	
BRKT A-FRT AXLE MTG FRT	4010	20
BRKT A-FRT AXLE MTG,LH	4121	2
BRKT A-FRT AXLE MTG,RH	4121	3
BRKT A-FRT BUMPER MTG	4010	36
BRKT A-FRT BUMPER MTG	4010	37
BRKT A-FRT DR TRIM	7115	11
BRKT A-FRT UPR ARM MTG	4010	38
BRKT A-FRT UPR ARM MTG	4010	39
BRKT A-GAUGE MOUNTING NO.2	7610	29
BRKT A-H/CTRL ARM MTG	4010	42
BRKT A-H/CTRL ARM MTG	4010	43
BRKT A-HMS LAMP	8320	7
BRKT A-JOINT BOX MTG	5720	19
BRKT A-LATERAL ROD MTG	4010	50
BRKT A-LUGGAGE MTG	5620	13
BRKT A-MAKE UP HOSE	2130	16
BRKT A-MAKE UP HOSE	2130	16
BRKT A-OVM TOOL MTG	5210	25
BRKT A-PDL MODULE MTG	2010	21
BRKT A-R/TANK MTG #4	2130	10
BRKT A-RADIATOR RESERVIOR FRT UPR M	5720	22
BRKT A-RADIATOR RESERVIOR LWR MTG	5720	31
BRKT A-RADIATOR RESERVIOR RR UPR MT	5720	23
BRKT A-REBOUND STOPPER	4010	44
BRKT A-RELAY BOX MTG	5720	10
BRKT A-RELAY BOX MTG SIDE	5720	11
BRKT A-SEAT BELT ANCHOR MTG	5620	4
BRKT A-SHIELD SUPPORT	2312	31
BRKT A-SPRG & S/ABS MTG	4010	47
BRKT A-SPRG & S/ABS MTG	4010	48
BRKT ASSY-2WAY CON MTG,RR	4211	29
BRKT ASSY-3WAY CON MTG,RR	4211	28
BRKT ASSY-ENG.HANGER,RR	1113	5
BRKT A-STAB/BAR TO FRAME	4010	45
BRKT A-T.G.S	3710	2
BRKT SUB A-L/ARM MTG RR	4010	40
BRKT SUB A-L/ARM MTG RR	4010	41
BRKT-3 WAY CONNECTOR MTG	4010	17
BRKT-3 WAY CONNECTOR MTG	4010	18
BRKT-A FENDER MTG TO A PLR LWR	5230	8
BRKT-A FENDER MTG TO A PLR UPR	5230	7

PART NANE	GROUP NO.	
BRKT-A/T LEVER MTG	3740	2
BRKT-AIR PLENUM CHAMBER	5730	2
BRKT-ALTERNATOR	1453	1
BRKT-BODY MTG #5	5620	7
BRKT-BODY MTG NO.1,LWR	5120	26
BRKT-C/MBR 3 6 SUPT	4010	8
BRKT-C/MBR 5 SUPT	4010	10
BRKT-COWL CROSS MBR MTG	5230	10
BRKT-CRASH PAD CTR UPPER LOCATION	7610	39
BRKT-ENG MTG	1113	2
BRKT-FRONT BUMPER SIDE SUPPORT	7870	5
BRKT-FRT S/SILL MTG	7930	45
BRKT-HOOD STAY ROD MTG #1	5710	12
BRKT-HORN	8610	13
BRKT-HOSE MTG FRT	4010	25
BRKT-IGNITION CABLE	1441	15
BRKT-LWR ARM TO FRAME OTR	4010	46
BRKT-MAKE UP HOSE MTG	5720	38
BRKT-REAR BUMPER MOUNTING	7880	6
BRKT-REAR BUMPER SIDE MOUNTING	7880	5
BRKT-RETURN TUBE MTG	4641	9
BRKT-RR S/SILL MTG	7930	78
BRKT-SPEED SENSOR	3212	46
BRKT-STAB/BAR MTG,FRT	4420	3
BRKT-TAILGATE GUIDE BUMPER NO.2	5620	5
BRKT-WIND/RESERVIOR MTG	5720	12
BUCKLE A-FRONT	7430	2
BULB	8310	16
BULB	8310	17
BULB	8310	18
BULB	8310	19
BUMPER A-FRONT	7870	1
BUMPER A-FRT SUSP	4411	1
BUMPER A-HOOD CORNER SEALG RR	5710	16
BUMPER A-HOOD OVERSLAM	5710	9
BUMPER A-REAR	7880	1
BUMPER A-RR SUSPENSION	4511	3
BUMPER-FUEL FILLER DR OVERSLAM	7090	3
BUMPER-HOOD GUIDE	5710	8
BUMPER-REBOUND FRT	4411	2
BUMPER-T/GATE O/SLAM	6410	17

PART NAME INDEX

PART NANE	GROUP NO.	
BUSH	3611	17
BUSH	3611	18
BUSH	3611	19
BUSH	3611	20
BUSH	3611	21
BUSH	3612	11
BUSH	3616	08
BUSH	3616	09
BUSH	3616	10
BUSH	3616	10
BUSH	3616	11
BUSH	3616	11
BUSH	3616	12
BUSH	3616	12
BUSH	3616	13
BUSH	3616	14
BUSH	3616	14
BUSH-FRT AXLE MTG LWR	4310	3
BUSH-FRT AXLE MTG RR UPR	4310	5
BUSH-FRT AXLE MTG UPR	4310	2
BUSH-HINGE	7520	21
BUSHING	1130	26
BUSHING A-FRT UPR ARM	4410	5
BUSHING-C/PDL SPRG	3030	14
BUSHING-EI35	4511	17
BUSHING-FRT LWR ARM	4411	9
BUSHING-FRT LWR ARM,RR	4411	16
BUSHING-LATERAL ROD	4511	16
BUSHING-OIL PUMP CHAIN	1532	21
BUSHING-RR LWR	4511	14
BUSHING-RR UPR ARM	4511	12
BUSH-OFFSET LEVER	3146	10
BUSH-OFFSET LEVER	3166	09
BUSH-RR STABILIZER BAR	4511	20
BUSH-SHK/ABS	4511	36
BUSH-SHK/ABS ECS-S30	4411	5
BUSH-SHK/ABS ECS-S30	4511	6
BUSH-STAB/BAR LINK MTG	4420	5
BUSH-STAB/BAR LINK MTG	4511	22
BUSH-STAB/BAR MTG,FRT	4420	2
BUSH-T.G.S	3176	3

PART NANE	GROUP NO.	
C/MBR A-FRT AXLE MTG	4310	7
CABLE A-BATT GROUND	2610	12
CABLE A-BATTERY POSITIVE	2610	11
CABLE A-HOOD LATCH RELEASE	5710	2
CABLE A-P/BRK	4910	1
CABLE A-P/BRK	4910	2
CABLE IGNITION	1441	11
CABLE-IGNITION	1440	10
CALIPER ASSY-FRT BRAKE	4830	1
CALIPER ASSY-RR CALIPER	4841	2
CAM-ELECTRIC SHIFT	3212	26
CAMSHAFT ASSY-EXHAUST	1221	22
CAMSHAFT ASSY-INTAKE	1221	21
CANISTER A	2220	12
CAP	1411	5
CAP "A"-CTR COVER MTG	5730	24
CAP "B"-CTR COVER MTG	5730	29
CAP "C"-CTR COVER MTG	5730	28
CAP A-F/FILLER	2210	17
CAP A-HUB FRT(SUS-EXP)	4170	4
CAP A-HUB RR(SUS-EXP)	4170	5
CAP ASSY-OIL FILLER	1221	13
CAP NUT	5730	23
CAP NUT-FLANGE	7720	19
CAP NUT-FLANGE M5	7720	4
CAP-BATT TERMINAL (-)	2610	9
CAP-BATT TML(+)	2610	8
CAP-CAMSHAFT BEARING	1211	6
CAP-CRANKSHAFT BEARING	1123	2
CAP-CRANKSHAFT BEARING	1124	2
CAP-DR INSIDE HANDLE BEZEL MTG	7110	10
CAP-DR INSIDE HANDLE BEZEL MTG	7210	10
CAP-LOCKING	1624	6
CAP-ROOF ASSIST HANDLE	7330	7
CAP-RR WASHER TANK	7820	14
CAP-RR WIPER	7830	7
CAP-RR WIPER ARM	7830	10
CAP-RSVR TANK	2130	9
CAP-RUBBER	1623	6
CAP-STAB/BAR MTG	4511	21
CAP-T/GATE TRIM PNL MTG	6410	41

PART NANE	GROUP NO.	
CAP-WINDSHIELD SIDE MLDG END LWR	7840	12
CAP-WINDSHIELD SIDE MLDG END LWR	7840	15
CAP-WINDSHIELD SIDE MLDG END UPR	7840	11
CAP-WINDSHIELD SIDE MLDG END UPR	7840	14
CARRIER ASSY	3211	15
CARRIER ASSY-PLANETARY	3616	35
CASE ASSY-T/M	3612	20
CASE ASSY-T/M	3612	20
CASE ASSY-TRANSFER	3212	01
CASE ASSY-TRANSPER	3210	01
CASE-DIFF	4211	3
CASE-DIFF.	4121	10
CATCH&CABLE A-FUEL FILLER DR	7090	1
CCC A-COMPLETE	2421	8
CHAIN	3212	57
CHAIN-DOUBLE BUSH	1311	1
CHAIN-OIL PUMP	1532	18
CHAIN-OIL PUMP ROLLER	1531	18
CHANNEL A-FRT DR QUADRANT	7120	14
CHANNEL A-REAR DOOR DIVISION	7220	11
CHECKER A-FRT DR	7110	14
CHECKER A-RR DR	7210	13
CLAMP	1123	24
CLAMP	1531	33
CLAMP	1532	32
CLAMP	1542	18
CLAMP	1542	19
CLAMP	2210	11
CLAMP	3211	33
CLAMP A-BATT	2610	4
CLAMP A-GEAR MTG	4620	5
CLAMP-AIR VENT	4121	33
CLAMP-AIR VENT	4211	31
CLAMP-PIPE	4641	10
CLAMP-SPRG RETURN HOSE	4641	7
CLAMP-SPRG RETURN HOSE	4641	8
CLAMP-SPRT	2130	20
CLAMP-SPRT	2130	20
CLAMP-WDT-LE	2130	21
CLAMP-WDT-LE	2130	21
CLAMP-WDT-LE	2210	55

PART NANE	GROUP NO.	
CLAMP-WORM DRIVE TYPE SPR	2130	24
CLAMP-WORM DRIVE TYPE SPR	2130	25
CLAMP-WORM DRIVE TYPE SPR	2130	26
CLAMP-WORM DRIVE TYPE SPR	2130	24
CLAMP-WORM DRIVE TYPE SPR	2130	25
CLAMP-WORM DRIVE TYPE SPR	2130	26
CLAMP-WR	2210	16
CLEANER A-AIR	2312	1
CLIP	1521	14
CLIP	1522	24
CLIP	1522	26
CLIP	3212	49
CLIP	3212	51
CLIP	3612	53
CLIP	3614	05
CLIP	3616	42
CLIP	3740	7
CLIP	7930	44
CLIP A-TUBE MTG	3750	5
CLIP RR SET-CLIPER,MANDO SET=2	4841	18
CLIP SET-CLIPER,MANDO SET=2	4830	12
CLIP-A/CLEANER	2312	15
CLIP-A0F0M	2312	4
CLIP-ABD TUBE MTG	4821	16
CLIP-AIR VENT HOSE	4211	34
CLIP-B PLR COVER MTG	7930	16
CLIP-B PLR COVER MTG	7930	18
CLIP-BRAKE TUBE MTG	3020	19
CLIP-BRAKE TUBE MTG	4821	11
CLIP-BRAKE TUBE MTG	4821	14
CLIP-BRAKE TUBE MTG (5H)	4821	15
CLIP-CLOSED-CT	6820	25
CLIP-DEAERATION TUBE MTG	2130	19
CLIP-DEAERATION TUBE MTG	2130	19
CLIP-DOOR BELT O/SIDE WEATHER STRIP I	7221	13
CLIP-DR BELT O/SIDE WEATHER STRIP MT(	7121	12
CLIP-DR MLDG MTG	7930	17
CLIP-F/FLR DR REL CABLE	5710	11
CLIP-FLEXIBLE HOSE	3020	15
CLIP-FLEXIBLE HOSE	4821	24
CLIP-FUEL FILLER DR RELEASE CABLE	7090	2

PART NAME INDEX

PART NANE	GROUP NO.		PART NANE	GROUP NO.		PART NANE	GROUP NO.		PART NANE	GROUP NO.	
CLIP-FUEL FILLER DR RELEASE CABLE	7820	11	CONSOLE-MAIN	7630	14	COVER -CARRIER	4211	24	CRK/SHT SPACER RING	1130	20
CLIP-FUEL TUBE MTG	2220	33	CONTACT COIL A-STEER'G	8810	6	COVER IGNITION CABLE	1441	8	CUP HOLDER A-CONSOLE,FRONT	7630	16
CLIP-FUEL TUBE MTG	2220	34	CONVERTER ASSY-TORQUE	3611	30	COVER-A/CRUISE CONT SW BLANKG	8510	28	CUSHION A-FRONT SEAT	7420	18
CLIP-HOOD STAY ROD	5710	14	CONVERTER ASSY-TORQUE	3611	30	COVER-A/INTAKE SHIELD	2312	30	CUSHION A-REAR SEAT	7520	29
CLIP-SHROUD COVER MTG	2120	8	CONVERTER ASSY-TORQUE	3611	30	COVER-A/T INDICATOR	7630	4	CYLINDER A-CLUTCH MASTER	3020	1
CLIP-STUD BOLT	2610	13	CONVERTER ASSY-TORQUE	3611	30	COVER-COMP FLANGE	4121	26	CYLINDER A-CLUTCH RELEASE	3020	7
CLIP-TAIL GATE TRIM MOUNTING SPRING	7610	16	CONVERTER ASSY-TORQUE	3611	30	COVER-CONSOLE UPR	7630	3	CYLINDER ASSY-CLUTCH MASTER	3611	40
CLIP-TRIM	7730	9	COOLER ASSY-OIL	1542	14	COVER-CRK/SHT SEALING,RR	1123	13	CYLINDER ASSY-CLUTCH MASTER	3611	40
CLIP-TRIM MOUNTING	7730	10	COOLER A-T/M	3750	8	COVER-CRK/SHT SEALING,RR	1124	15	CYLINDER ASSY-CLUTCH MASTER	3616	27
CLIP-TRIM MOUNTING	7730	11	CORE A-EVAPORATOR	6840	31	COVER-DEFR NOZZLE	7610	30	CYLINDER ASSY-CLUTCH MASTER	3616	27
CLIP-TUBE MTG	2130	18	CORE A-HEATER	6810	7	COVER-DUST	1532	29	CYLINDER ASSY-CLUTCH MASTER	3616	27
CLIP-TUBE MTG	2130	18	COTTER-VALVE	1211	34	COVER-DUST	3166	20	CYLINDER ASSY-CLUTCH MASTER	3616	27
CLIP-VACUUM HOSE MTG	4850	10	COUPLING PLUG	1440	3	COVER-FRONT	3141	3	DAM A-FRT DR QUADRANT	7121	4
CLIP-WINDSHIELD SIDE	7840	20	COUPLING PLUG	1441	2	COVER-FRONT	3161	03	DAMPER ASSY-TORSIONAL	3212	34
CLOCK A-DIGITAL	8510	32	COVER	3212	20	COVER-FRONT SEAT MOUNTING REAR OU	7410	5	DAMPER ASSY-VIBRATION	1130	12
CLUTCH ASSY	3615	30	COVER A-COWL TOP CNR	5730	21	COVER-FRT SERVO	3612	29	DAM-WINDSHIELD UPR	7840	4
CLUTCH ASSY-RR	3616	38	COVER A-COWL TOP CTR	5730	22	COVER-FRT(CYL.HEAD)	1221	2	DEADENING SHT-DASH PNL	5730	14
COAT HOOK	7330	8	COVER A-CRASH PAD CTR LOWER	7610	12	COVER-FUEL FILLER DR RELEASE HANDLE	7090	6	DEADENING SHT-DASH PNL	5730	15
COIL ASSY-CLUTCH	3212	17	COVER A-FUSE BOX	7720	18	COVER-FUEL PUMP RELAY	1430	11	DEADENING SHT-DASH PNL,CTR	5730	13
COIL SPRING-RR	4511	1	COVER A-INR	7120	4	COVER-GLOVE BOX BEHIND	7610	40	DIFF. ASSY	4121	9
COIL-IGNITION	1440	1	COVER A-INR	7120	5	COVER-IDLER PULLEY	1331	11	DIFFERENTIAL ASSY	4211	2
COLLAR-LOCK UP	3211	36	COVER A-SIDE DEF NOZZEL	7610	5	COVERING-SEAT	7410	24	DISC ASSY-CLUTCH	3010	1
COLUMN & SHAFT A-TILT	4613	2	COVER ASSY	3212	16	COVER-INSIDE MIRROR	7770	9	DISC-BRAKE,FRT	4115	8
COMPRESSOR A-AIR CON	6820	2	COVER ASSY IGNITION COIL	1441	4	COVER-LOCK	1331	21	DISC-CLUTCH	3611	16
CONDENSER A	6850	4	COVER ASSY PROTECTION	1441	3	COVER-OIL FILTER	1541	1	DISC-CLUTCH	3615	07
CONNECTOR	1123	21	COVER ASSY-CARRIER	4121	30	COVER-OIL FILTER	1542	2	DISC-CLUTCH OTR	3611	14
CONNECTOR	1211	8	COVER ASSY-CLUTCH	3010	2	COVER-OIL PUMP	1531	2	DISC-CLUTCH OTR	3611	15
CONNECTOR	1331	5	COVER ASSY-CRK/SHT SEALING,RR	1123	15	COVER-OIL PUMP	1532	2	DISC-CLUTCH OTR	3615	04
CONNECTOR	1623	4	COVER ASSY-CRK/SHT SEALING,RR	1124	17	COVER-PROTECTION	1440	4	DISC-CLUTCH OTR	3615	05
CONNECTOR	1713	6	COVER ASSY-CYLINDER HEAD	1221	1	COVER-PROTECTION LINKAGE	1712	4	DISC-CLUTCH OTR	3615	06
CONNECTOR	3212	48	COVER ASSY-IGNITION COIL	1440	5	COVER-RECLINER LOWER	7520	17	DISC-CLUTCH OTR	3615	11
CONNECTOR	3612	34	COVER ASSY-PUMP	3611	35	COVER-RR COMBI LAMP	6410	13	DISC-CLUTCH OTR	3615	12
CONNECTOR	4211	30	COVER ASSY-PUMP	3611	35	COVER-RR WHEEL HOUSE	7740	8	DISC-CLUTCH OTR	3615	13
CONNECTOR IGNITION COIL	1441	13	COVER ASSY-PUMP	3611	35	COVER-RR WIPER CAP	7830	9	DISC-CLUTCH OTR	3615	13
CONNECTOR SPARK PLUG	1441	14	COVER ASSY-PUMP	3611	35	COVER-SHAFT	4211	48	DISC-CLUTCH OTR	3615	13
CONNECTOR-4WAY COOLANT	2130	3	COVER ASSY-RR SERVO	3612	30	COVER-SHROUD	2120	7	DISC-CLUTCH OTR	3615	14
CONNECTOR-AIR VENT,FRT	4121	32	COVER ASSY-RR SERVO	3612	30	COVER-TIMING GEAR CASE	1332	1	DISC-CLUTCH OTR	3615	14
CONNECTOR-IGNITION COIL	1440	12	COVER ASSY-TIMING GEAR CASE	1331	1	COVER-TOP,2WD	3166	01	DISC-CRK/SHT VIB.DAMPER	1130	7
CONNECTOR-SPARK PLUG	1440	13	COVER A-STYLING	8610	23	COVER-TOP,4WD	3146	01	DISC-RR BRAKE	4841	1
CON-ROD ASSY	1130	25	COVER A-T/GATE SIDE TRIM	6410	21	CRANK SHAFT	1130	1	DRILLING SCREW-DOOR SCUFF	7720	22
CONSOLE A-COMPL	7630	1	COVER A-T/GATE UPR TRIM	6410	22	CRASH PAD A-COMPLETE	7610	1	DRILLING SCREW-DOOR SCUFF	7720	23

PART NAME INDEX

PART NANE	GROUP NO.		PART NANE	GROUP NO.		PART NANE	GROUP NO.		PART NANE	GROUP NO.	
DRIVER A	7520	11	FADTENER-H/LAMP	8310	12	FORK ASSY-CLUTCH RELEASE	3141	13	GASKET-BRK HOSE TO CALIPER	4821	20
DRIVER-PLUS & MINUS	9110	6	FAN & MOTOR A-BLOWER	6810	6	FORK ASSY-CLUTCH RELEASE	3161	13	GASKET-CYL.HEAD	1211	22
DUCT A-CTR AIR VENT	7610	6	FAN & SHROUD A-ADD	2120	5	FORK ASSY-REDUCTION SHIFT	3212	12	GASKET-CYL.HEAD	1211	23
DUCT A-RR HEATING	6830	2	FAN & SHROUD A-MAIN	2120	5	FORK&BUSH ASSY-SHIFT,3&4	3145	05	GASKET-CYL.HEAD COVER	1221	17
DUCT A-RR HEATING,RR	6830	3	FAN ASSY	1331	23	FORK&BUSH ASSY-SHIFT,3&4	3165	05	GASKET-EXHAUST MANIFOLD	1722	3
DUCT A-SIDE AIR VENT NO.2	7610	11	FAN ASSY	1332	6	FORK-SHIFT,1&2,5&R	3145	01	GASKET-EXHAUST MANIFOLD	1723	7
DUCT-RR HEATING JOINT	6830	1	FASCIA A-FRONT BUMPER	7870	2	FORK-SHIFT,1&2,5&R	3165	01	GASKET-FRT BRAKE HOSE CALIPER	4830	6
DUST COVER	4211	47	FASCIA A-FRONT CONSOLE	7630	2	FRAME A-AUDIO & BOX	8910	16	GASKET-FRT BRAKE HOSE CALIPER	4841	6
DUST COVER-FRT SEAT BELT	7430	4	FASCIA-REAR BUMPER	7880	2	FRAME A-CHASSIS	4010	1	GASKET-OIL FILTER	1542	13
DUST COVER-REAR SEAT BELT	7530	11	FASTENER-D/GARNISH OPEN	7930	34	FRT DR TRIM	7115	1	GASKET-OIL FILTER HOUSING	1542	8
ELEMENT KIT-OIL FILTER	1541	3	FASTENER-DOOR TRIM MOUNTING	7215	3	FULCRUM-CLUTCH PEDAL	3030	5	GASKET-OIL PAN	1531	29
ELEMENT KIT-OIL FILTER	1542	9	FASTENER-DR TRIM A	7115	8	FULCRUM-PEDAL TO BRKT	4810	10	GASKET-OIL PAN	1532	28
EMBLEM-2300	7950	16	FASTENER-DR TRIM MTG	7115	3	GARNISH A-FNDR	7930	1	GASKET-OIL PAN	3614	04
EMBLEM-3200	7950	14	FASTENER-HOOD INSULATION PAD	6110	7	GARNISH A-FRT DR	7930	2	GASKET-OIL PLUG	3141	9
EMBLEM-ROAD PARTNER	7950	3	FASTENER-TREE TYPE	7330	1	GARNISH A-FRT DR	7930	10	GASKET-OIL PLUG	3161	09
EMBLEM-TD	7950	13	FASTENER-TREE TYPE	7330	9	GARNISH A-FRT SIDE SILL	7930	6	GASKET-OIL STRAINER	1531	38
END A-FRT SUSP LWR	4411	10	FASTENER-TREE TYPE	7740	3	GARNISH A-FRT WHEEL ARCH	7930	4	GASKET-RR SERVO COVER	3612	01
END A-FRT SUSP UPR	4410	6	FILLER A-FUEL	2210	8	GARNISH A-FRT WHEEL ARCH	7930	13	GASKET-RR SERVO COVER	3612	01
END A-TIE ROD	4620	3	FILM-WATER PROTECTOR	7910	13	GARNISH A-RR BPR	7930	15	GASKET-T.G.C.COVER	1221	7
END CAP-REAR DOOR GLASS RUN INSIDE	7220	13	FILTER A-FUEL	2220	8	GARNISH A-RR BUMPER	7930	8	GASKET-WATER PUMP	1521	5
END PIECE-TORSION BAR	4420	12	FILTER ASSY	3211	32	GARNISH A-RR DR	7930	3	GAUGE-OIL DIPSTICK	1531	31
ENGINE ASSY	1112	1	FILTER ASSY-OIL	1542	1	GARNISH A-RR DR	7930	11	GAUGE-OIL DIPSTICK	1532	38
ENGINE ASSY	1113	1	FILTER ASSY-OIL	3614	06	GARNISH A-RR SIDE SILL	7930	7	GEAR & LINKAGE A-STRG	4620	2
ENGINE CONTROL UNIT	1490	1	FILTER CAP	1490	2	GARNISH A-RR WEEL ARCH	7930	5	GEAR 5TH, C/S	3143	06
EQUALIZER-P/BRAKE CABLE	4910	6	FILTER SERVICE KIT	3614	11	GARNISH A-RR WHEEL ARCH	7930	14	GEAR 5TH, C/S	3163	07
EVAPORATOR A	6840	3	FILTER-MULTILIP	3614	07	GARNISH-TAIL GATE	7940	1	GEAR ASS`Y-2ND	3142	15
EXTENSION A-INTERM FLOOR	5620	2	FILTER-SOLENOID	3613	04	GASKET	1221	14	GEAR ASS`Y-2ND	3162	15
EXTENSION-"A" PILLER OTR UPR	5230	2	FITTING-HOSE	1211	17	GASKET	2421	10	GEAR ASS`Y-3RD	3142	13
EXTENSION-"B" PILLER SEALG	5240	3	FLANGE	1521	3	GASKET	2421	13	GEAR ASS`Y-3RD	3162	13
EXTENSION-COWL UPR SIDE	5730	6	FLANGE	1542	23	GASKET	2422	10	GEAR ASSY-5TH	3142	27
EXTENSION-FRT/APRON RR LWR	5720	25	FLANGE ASSY-COMPANION	4121	25	GASKET	2422	13	GEAR ASSY-5TH	3142	32
EXTENSION-QUARTER OTR LWR	5210	3	FLANGE-COMP	3166	22	GASKET	3212	28	GEAR ASSY-5TH	3162	27
EXTENSION-QUARTER OTR UPR	5210	2	FLANGE-COMPANION	3212	09	GASKET	3611	01	GEAR ASSY-5TH	3162	32
EXTENSION-ROOF DRIP RAIL	5210	4	FLANGE-COMPANION	4121	27	GASKET	3611	02	GEAR ASSY-REV.	3142	23
EXTENSION-ROOF RR	5510	3	FLANGE-COMPANION	4211	19	GASKET	3612	02	GEAR ASSY-REV.	3162	23
EXTENSION-RR FLOOR SIDE	5620	8	FLANGE-COOLANT PIPE	1522	34	GASKET	3612	02	GEAR ASSY-REVERSE SUN	3616	31
EXTENTION-FRONT APRON RR LWR	5720	4	FLANGE-WATER PUMP	1522	3	GASKET KIT-CYLINDER BLOCK	1123	20	GEAR REV-C/S	3143	04
EYE BOLT	4841	5	FLAP-RESONANCE	1713	8	GASKET KIT-CYLINDER BLOCK	1124	24	GEAR REV-C/S	3163	05
EYE BOLT-HOSE TO CALIPER	4821	18	FLASHER UNIT	8410	6	GASKET KIT-CYLINDER HEAD	1211	24	GEAR SET-R/P	4121	6
FACIA-CONSOLE,REAR	7630	8	FLYWHEEL ASSY MECH	1130	13	GASKET KIT-CYLINDER HEAD	1221	19	GEAR-DIFF PINION	4121	16
FACING-SHIFT FORK	3212	11	FORK	3212	14	GASKET-BRK HOSE TO CALIPER	3020	28	GEAR-DIFF SIDE	4121	14

PART NAME INDEX

PART NANE	GROUP NO.	
GEAR-DIFF SIDE	4211	5
GEAR-DIFF. PINION	4211	4
GEAR-DRIVE,SPEEDOMETER	3162	35
GEAR-PINION	3211	22
GEAR-PLANETARY SUN	3616	32
GEAR-REV.IDLER	3144	08
GEAR-REV.IDLER	3164	08
GEAR-RING	1130	14
GEAR-RING	3212	02
GEAR-RING	3616	40
GEAR-RING	3616	40
GEAR-SET-R/P	4211	10
GEAR-SPEEDO	3212	30
GEAR-SPEEDO DRIVE	3616	41
GEAR-SUN	3211	13
GLASS A-SIDE TINTED	7840	16
GLASS A-TAIL GATE TINTED	7840	18
GLASS A-WINDSHIELD,TINTED	7840	1
GLASS RUN-FRT DR WINDOW	7120	6
GLASS RUN-REAR DOOR DIVISION CHANNE	7220	12
GLASS RUN-REAR DOOR WINDOW	7220	6
GLASS-FRT DR DROP(TINTED)	7840	21
GLASS-RR DR DROP(TINTED)	7840	22
GLASS-RR DR FIXED(TINTED)	7840	23
GLASS-TAIL GATE TINTED	7840	19
GLASS-WINDSHIELD,TINTED,ANTENNA	7840	2
GRILLE A-AIR EXTRACTOR	7930	9
GRILLE A-RADIATOR	7910	1
GRIP A-FRT DR GLASS	7120	8
GRIP A-REAR DOOR GLASS	7220	5
GRIP HANDLE-FRONT DOOR TRIM	7215	25
GRIP HANDLE-FRT DR TRIM	7115	25
GROMMET	4841	17
GROMMET	7930	57
GROMMET A-RR WASHER ROOF RAIL	7820	5
GROMMET SCREW	8310	14
GROMMET-A/CON	6820	18
GROMMET-COWL TOP COVER MTG	5730	26
GROMMET-DOOR INSIDE HANDLE MOUNTI	7215	7
GROMMET-DR I/S HDL MTG	6410	30
GROMMET-DR INSIDE HANDLE MTG	7110	13

PART NANE	GROUP NO.	
GROMMET-DR INSIDE HANDLE MTG	7115	10
GROMMET-DR INSIDE HANDLE MTG	7210	12
GROMMET-DR TRIM MTG	6410	27
GROMMET-DR TRIM MTG	7115	9
GROMMET-ENG MAIN	1411	2
GROMMET-FENDER APRON	1411	3
GROMMET-FRONT DR SAFETY LOCK ROD	7215	2
GROMMET-FRT DR SAFETY LOCK ROD	7115	2
GROMMET-HEATER PIPE	6820	31
GROMMET-SCREW	6410	29
GROMMET-SCREW	6830	4
GROMMET-SCREW	7090	7
GROMMET-SCREW	7740	1
GROMMET-SCREW	7770	3
GUIDE ASSY UPR PART CABLE	1441	7
GUIDE RAIL A-DRIVER	7440	7
GUIDE RAIL A-PASS.MNL	7440	1
GUIDE-VALVE	1211	29
HANDLE A-DR INSIDE	7110	8
HANDLE A-DR INSIDE	7210	8
HANDLE A-FRT DR OUTSIDE	7110	11
HANDLE A-FUEL FILLER DR RELEASE	7090	4
HANDLE A-HOOD LATCH RELEASE	5710	3
HANDLE A-ROOF ASSIST	7330	4
HANDLE A-RR DR OUTSIDE	7210	15
HANDLE A-S/TIRE MTG	4180	4
HANDLE A-S/TIRE MTG	9110	2
HANGER	2421	15
HANGER	2421	23
HANGER	2422	15
HANGER	2422	23
HDL A-T/GATE I/S	6410	8
HDL A-T/GATE O/S	6410	9
HEAD ASSY-CYL.	1211	1
HEAD ASSY-CYL.	1211	2
HEAD LINING A	7330	2
HEAD REST A-FRONT	7420	7
HEAT PROTECTOR A-DASH	2421	4
HEAT PROTECTOR A-DASH	2422	4
HEAT PROTECTOR-FLOOR	2421	16
HEAT PROTECTOR-FLOOR	2422	16

PART NANE	GROUP NO.	
HEAT PROTECTOR-FRT FLOOR	2422	20
HEAT PROTECTOR-FRT FLOOR	2421	20
HEAT PROTECTOR-RR FLOOR	2421	21
HEAT PROTECTOR-RR FLOOR	2422	21
HEAT SHIELD-INSULATOR	1990	4
HEIGHT ADJUSTER A-FRONT SEAT BELT	7430	3
HEXAGON BOLT	7880	12
HEXAGON BOLT	7880	13
HINGE A-HOOD	6110	3
HINGE ASSY	6210	3
HINGE ASSY	6310	3
HINGE A-T/GATE	6410	43
HINGE BUSH	7520	15
HINGE COVER-FRONT	7420	20
HOLDER A-GLASS	7850	5
HOLDER(8)	7110	17
HOLDER-BRK HOSE MTG	4821	25
HOLDER-HOOD STAY ROD	5710	18
HOLDER-NUT	4910	7
HOLDER-ROOF ASSIST HANDLE NO.1	7330	5
HOLDER-ROOF ASSIST HANDLE NO.2	7330	6
HOLDER-S/TIRE HANDLE	9110	3
HOLDING STRAP A	7520	26
HOOK A-FRT LASHING	4010	21
HOOK A-FRT TOW	4010	22
HOOK A-LUGGAGE	7740	9
HOOK-LASHING	4010	51
HORN A-HIGH	8610	12
HORN A-LOW	8610	12
HOSE	1522	23
HOSE	1542	17
HOSE	1123	22
HOSE & TUBE A-RETURN	4641	2
HOSE A-A/T INLET	3750	12
HOSE A-AIR VENT	2210	14
HOSE A-BRAKE RR	4821	21
HOSE A-BRK FRT	4821	19
HOSE A-BRK RR,LH	4821	22
HOSE A-BRK RR,RH	4821	23
HOSE A-BSTR VAC	4850	9
HOSE A-CLUTCH	3020	5

PART NANE	GROUP NO.	
HOSE A-COOLER TO RAD	3750	10
HOSE A-F/TANK TO TUBE	2220	1
HOSE A-HEATER INLET	6820	27
HOSE A-HEATER INLET	6820	28
HOSE A-HEATER OUTLET	6820	30
HOSE A-PUMP TO GEAR	4641	1
HOSE ASSY-VENTILATION	1123	23
HOSE A-TUBE TO COOLER	3750	9
HOSE-AIR VENT	4121	34
HOSE-AIR VENT	4211	32
HOSE-CANI TO V/TUBE	2220	28
HOSE-CONNECTOR TO ENG	2130	5
HOSE-COOLANT	1521	13
HOSE-COUPLING	3211	34
HOSE-DEAERATION	2130	12
HOSE-DEAERATION ENG	2130	7
HOSE-DISCHARGE	6850	8
HOSE-F/FILTER TO ENG	2220	5
HOSE-FUEL FILLER	2210	13
HOSE-HEATER PIPE	1522	30
HOSE-MAKE UP	2130	6
HOSE-P.C.V TO CANISTER	2220	29
HOSE-R/TUBE TO ENG	2220	6
HOSE-RADIATOR INLET	2130	1
HOSE-RADIATOR OUTLET	2130	4
HOSE-RADIATOR TO CONN	2130	2
HOSE-RETURN	4641	4
HOSE-RETURN TUBE	2220	2
HOSE-RR WASHER	7820	13
HOSE-SIDE AIR VENT #1	6830	6
HOSE-SUCTION	6820	9
HOSE-TUBE TO TUBE	4641	6
HOSE-VAPOR F/TANK TO TUBE	2220	27
HOSE-VENTILATION	1221	20
HOSE-WINDSHIELD WASHER	7820	7
HOSE-WINDSHIELD WASHER	7820	17
HOUSING A-F/FILLER	5210	12
HOUSING A-RR COMBI LAMP	5210	11
HOUSING ASSY-ADAPTOR	3612	60
HOUSING ASSY-ADAPTOR	3612	60
HOUSING ASSY-CONVERTER	3611	31

PART NAME INDEX

PART NANE	GROUP NO.	
HOUSING ASSY-CONVERTER	3611	31
HOUSING ASSY-THERMOSTAT	1521	9
HOUSING-CLUTCH	3211	40
HOUSING-EXTENSION,2WD	3166	18
HOUSING-EXTENSION,4WD	3146	16
HOUSING-SPIRAL	1522	5
HOUSING-TM	3141	1
HOUSING-TM	3161	01
HUB & DISC A-FRT	4115	1
HUB A-FRT	4115	2
HUB ASSY-AUTO.VAC LOCKING	4116	1
HUB WHEEL-FRT	4115	3
HUB-5TH&REV.	3142	29
HUB-5TH&REV.	3162	29
HUB-CLUTCH	3611	46
HUB-CLUTCH MACHINING	3615	29
HUB-CLUTCH MACHINING	3615	31
HUB-LOCKUP	3211	38
HUB-REDUCTION	3211	26
HUB-REDUCTION	3211	27
HUB-RR CLUTCH	3615	32
HUB-RR CLUTCH	3615	32
HUB-RR CLUTCH	3615	32
HUB-SYN ASSY,1&2	3142	07
HUB-SYN ASSY,1&2	3162	07
HUB-SYN ASSY,3&4	3142	20
HUB-SYN ASSY,3&4	3162	20
HUB-SYN ASSY,5TH&REV.	3142	28
HUB-SYNCHRO,1ST&2ND	3142	10
HUB-SYNCHRO,1ST&2ND	3162	10
HUB-SYNCHRO,3RD&4TH	3142	22
HUB-SYNCHRO,3RD&4TH	3162	22
HUB-SYNCHRO,5TH&REV.	3162	28
IDLER PULLEY COVER	1332	14
IGNITION CABLE ASSY	1440	9
IGNITION CABLE ASSY	1441	10
IGNITION COIL	1441	1
IMPELLER-WATER PUMP	1521	4
IMPELLER-WATER PUMP	1522	4
INNER RING-SYNCHRO	3142	19
INNER RING-SYNCHRO	3162	19
INSULATOR A-BODY MTG #5,LWR	5120	24
INSULATOR A-BODY MTG #5,UPR	5120	23
INSULATOR A-DASH INNER	7720	1
INSULATOR A-ENG MTG RR	3710	10
INSULATOR A-ENGINE ROOM UPPER	7720	6
INSULATOR A-FRONT FLOOR	7720	24
INSULATOR-A/CLNR MTG #1	2312	6
INSULATOR-A/CLNR MTG #2	2312	17
INSULATOR-BODY MTG #1,LWR	5120	4
INSULATOR-BODY MTG #1,UPR	5120	3
INSULATOR-BODY MTG #2,UPR	5120	9
INSULATOR-BODY MTG #3,UPR	5120	15
INSULATOR-BODY MTG #4,UPR	5120	19
INSULATOR-ENG MTG FRT	1990	1
INSULATOR-ENGINE ROOM	7720	3
INSULATOR-RADIATOR MTG	2111	2
INSULATOR-RUBBER	1623	8
INSULATOR-RUBBER	1624	8
JACK A-PANTOGRAPH	9110	1
JOINT ASSY-FLANGE	3310	3
KEY & RING A	7010	4
KEY SET	7010	1
KEY-CRANKSHAFT	1130	3
KEY-IGNITION	7010	
KEY-SYNCHRO	3142	09
KEY-SYNCHRO	3162	09
KNOB A	7520	19
KNOB A-A/T TGS (DLX)	3740	4
KNOB A-SHIFT LEVER	3710	3
KNOB RECLINER-FRONT	7410	13
KNOB RECLINER-FRONT	7420	21
KNOB-BOLT	9110	7
KNOB-DR SAFETY LOCK	7110	12
KNOB-DR SAFETY LOCK	7210	11
KNOB-LOCKER	7520	25
KNOB-T/GATE S/LOCK ROD	6410	7
LABEL WARNING	1441	9
LABEL-A/CON	2120	33
LABEL-DIESEL	7950	1
LABEL-DR CHILD SAFETY	7210	3
LABEL-GASOLINE UNLEADED	7950	18
LAMP A- HEAD	8310	2
LAMP A-CTR ROOM	8610	3
LAMP A-DOOR STEP	8610	7
LAMP A-FOG,FRT	8310	3
LAMP A-FRT FOG	7870	10
LAMP A-FRT ROOM	8610	19
LAMP A-GLOVE BOX	8610	20
LAMP A-HMS	8320	6
LAMP A-LICENSE PLATE	8320	1
LAMP A-LUGGAGE	8610	6
LAMP A-R/REF	8320	8
LAMP A-RR COMBI	8320	2
LAMP A-RR COMBI	8320	3
LAMP A-RR COMBI QTR	8320	2
LAMP A-RR COMBI QTR	8320	3
LAMP A-RR FOG	8320	9
LAMP A-S/REPEATER	8310	13
LATCH & ROD A-FRT DR	7110	1
LATCH & ROD A-RR DR	7210	2
LATCH A-HOOD	5710	6
LATCH A-TAIL GATE	7310	1
LATCH-ARM REST MAIN	7630	15
LEVER A-A/T	3740	1
LEVER A-LEVER/SUPPORT	7410	20
LEVER A-LUMBER/SUPPORT	7420	29
LEVER A-PARKING BRAKE	4910	4
LEVER A-SEMI REMOTE	3176	1
LEVER ASSY-BEARING	1843	9
LEVER ASSY-CONTROL	1842	3
LEVER ASSY-CONTROL	1843	3
LEVER ASSY-MANUAL VALVE DETENT	3612	48
LEVER ASSY-MANUAL VALVE DETENT	3612	48
LEVER ASSY-PARKING BRAKE ROD	3612	41
LEVER ASSY-REVERSING	1843	8
LEVER ASSY-SLOTTED GATE	1842	6
LEVER ASSY-SLOTTED GATE	1843	6
LEVER A-T/M SHIFT	3710	1
LEVER-OFFSET	3146	12
LEVER-OFFSET	3166	11
LEVER-RR SERVO	3612	36
LEVER-SHIFT	3146	08
LEVER-SHIFT	3166	07
LEVER-SHIFT,INNER	3145	07
LEVER-SHIFT,INNER	3165	07
LID-STRG WHEEL	4611	10
LIFTER-T/GATE	6410	15
LIGHTER A-CIGAR	7610	32
LIGHTER A-CIGAR	8510	33
LINING-RUBBER	1311	3
LINING-RUBBER	1311	6
LINK ASSY-CONNECTOR	1311	2
LINK A-STABILIZER	4420	4
LINK A-STABILIZER	4512	23
LINKAGE A-GEAR & O.B.J	4620	1
LINKAGE A-WINDSHIELD WIPER	7810	7
LINK-CONNECTOR	1532	15
LINK-MANUAL VALVE ACTUATING	3612	49
LINK-OIL PUMP CHAIN LOCK	1531	17
LOCK A-GLOVE BOX	7610	26
LOCK BOLT-INSIDE RR VIEW	7770	8
LOCK HUB-REAR SEAT ARM REST	7520	44
LOCKER A-R/C	7520	23
LOCKER COVER-REAR CUSHION	7520	41
LOOP-RR SEAT BACK HOLDG	5620	11
LOUVER A-CTR A/VENT	7610	8
LOUVER A-CTR A/VENT	7610	9
LOUVER A-SIDE A/VENT	7610	4
LOUVER A-SIDE A/VENT	7610	10
LUG-SHIFT,1&2	3145	03
LUG-SHIFT,1&2	3165	03
LUG-SHIFT,5&R	3145	09
LUG-SHIFT,5&R	3165	09
M/CYL A-POWER BRAKE	4850	7
M/GUARD A-FRT	7920	1
M/GUARD A-RR	7920	2
MAGNET	3212	13
MAGNET	3614	03
MAGNET ASSY-CAMSHAFT ADJUSTER	1311	31
MANIFOLD ASSY-EXHAUST	1722	1
MANIFOLD ASSY-EXHAUST	1723	1
MANIFOLD ASSY-EXHAUST	1723	2
MANIFOLD ASSY-INTAKE	1712	1

PART NAME INDEX

PART NANE	GROUP NO.	
MANIFOLD ASSY-INTAKE UPR	1713	1
MANIFOLD ASSY-INTAKE,LWR	1713	3
MAP POCKET-FRT DR TRIM	7115	4
MAT A-FRONT FLOOR	7720	12
MAT A-LOAD FLOOR	7740	2
MBR A2-ENG MTG RR CROSS	4010	52
MBR A-CROSS 3	4010	6
MBR A-CROSS 4	4010	7
MBR A-CROSS 5	4010	9
MBR A-CROSS 6	4010	11
MBR A-CROSS 7	4010	12
MBR A-CROSS 8	4010	13
MBR-CROSS 2	4010	5
MCC A-COMPLETE	2422	8
MEMBER A-COWL CROSS	5730	27
MEMBER A-RR FLOOR REINF #1	5620	14
MEMBER A-RR FLOOR REINF #2	5620	15
MEMBER A-RR FLOOR SUB	5620	10
MEMBER-COWL SIDE UPR	5730	7
MEMBER-COWL SIDE UPR OTR	5730	8
MEMBER-FRONT APRON UPR	5720	7
MEMBER-FRT/APRON UPR	5720	28
MIDDLE RING-SYNCHRO	3142	17
MIDDLE RING-SYNCHRO	3162	17
MIRROR A-INSIDE RR VIEW	7770	4
MIRROR A-OUTSIDE RR VIEW	7850	1
MIRROR A-OUTSIDE RR VIEW	7850	2
MLDG A-WINDSHIELD SIDE,LH	7840	10
MLDG A-WINDSHIELD SIDE,RH	7840	13
MLDG-WINDSHIELD UPR	7840	9
MODULATOR-ABS HYDRAULIC	4891	
MODULE A-ACCEL PEDAL	2010	24
MODULE A-AM/FM ANTENNA	8920	15
MOTOR A-FRT WIPER	7810	11
MOTOR A-POWER WINDOW	7120	2
MOTOR A-POWER WINDOW	7220	2
MOTOR A-RR WIPER	7830	16
MOTOR ASSY-T/C CONTROL	3212	41
MOTOR A-WINDSHIELD WASHER	7820	10
MOULDING A-FRT DR FRAME	7121	13
MOULDING A-REAR DOOR FRAME	7221	12

PART NANE	GROUP NO.	
MOULDING-DOOR TRIM(-W/G)	7215	11
MOULDING-DR TRIM(-W/G)	7115	13
MUFFLER A-COMPLETE	2421	11
MUFFLER A-COMPLETE	2422	11
NIPPLE	1713	5
NIPPLE(HOSE-CONNECTION)	1713	4
NOZZLE	1211	20
NOZZLE A-RR WASHER	7820	3
NOZZLE A-WINDSHIELD WASHER	7820	1
NOZZLE-OIL PUMP CHAIN LUBG.	1124	11
NUT	1311	28
NUT	1430	7
NUT	1452	3
NUT	1453	6
NUT	1722	2
NUT	1722	10
NUT	1723	3
NUT	1723	4
NUT	1842	12
NUT	3212	06
NUT	3212	21
NUT	4850	2
NUT-ADJUST WHEEL HUB	4115	11
NUT-BACK PLATE FIX	4211	51
NUT-CON WASHER	4613	6
NUT-CON WASHER	4641	12
NUT-CON WASHER	7870	12
NUT-EXHAUST MANIFOLD	1722	4
NUT-FLANGE	1331	20
NUT-FLANGE	1332	22
NUT-FRONT BUMPER B/BEAM SPIRE`A'	7870	14
NUT-HEX	2610	5
NUT-HEX	3030	7
NUT-HEX	4411	13
NUT-HEX	4611	11
NUT-HEX	4810	12
NUT-HEX	1990	5
NUT-HEX FLG	2312	28
NUT-HEX FLG	2421	24
NUT-HEX FLG	2421	25
NUT-HEX FLG	2422	24

PART NANE	GROUP NO.	
NUT-HEX FLG	2422	25
NUT-HEX FLG	2610	16
NUT-HEX FLG	3020	3
NUT-HEX FLG	3310	8
NUT-HEX FLG	3710	6
NUT-HEX FLG	3710	7
NUT-HEX FLG	3740	12
NUT-HEX FLG	4310	9
NUT-HEX FLG	4411	12
NUT-HEX FLG	4420	19
NUT-HEX FLG	5710	20
NUT-HEX FLG	6410	35
NUT-HEX FLG	1990	7
NUT-HEX FLG	3710	11
NUT-HEX FLG	5120	12
NUT-HEX NYLOK	3740	10
NUT-HEX PROJ	5120	28
NUT-HEX SELF	4310	13
NUT-HEX SELF	4410	13
NUT-HEX SELF	4410	15
NUT-HEX SELF	4411	22
NUT-HEX SELF	4411	29
NUT-HEX SELF	4420	18
NUT-HEX SELF	4511	27
NUT-HEX SELF	4511	29
NUT-HEX SELF	4511	33
NUT-HEX,SLOTTED	4410	16
NUT-HEX,SLOTTED	4411	28
NUT-HEXAGON W/CONICAL WASHER	7880	11
NUT-LOCK	3030	29
NUT-LOCK	3144	11
NUT-LOCK	3164	11
NUT-LOCK	3166	25
NUT-LOCK, C/S	3143	07
NUT-LOCK, C/S	3163	08
NUT-PINION	4121	29
NUT-PINION	4211	21
NUT-PROJ SQ	4810	14
NUT-RR WIPER CAP MTG	7830	8
NUT-SELF LOCK	4310	10
NUT-SIDE GLASS MTG	7840	17

PART NANE	GROUP NO.	
NUT-SMALL HEX	4410	11
NUT-SMALL HEX	4411	20
NUT-SMALL LOCK	4511	38
NUT-SML SLOT/LOW	4620	8
NUT-SPRING	7610	3
NUT-SPRING	7870	13
NUT-TIE ROD	4620	4
NUT-WHL	4170	1
OIL SEAL-COMP FLANGE	4121	24
OIL SEAL-COMP. FLANGE	4211	18
OIL SEAL-HUB	4121	39
OIL SEAL-HUB,INNER	4211	37
OIL SEAL-HUB,OUTER	4211	45
OIL SLINGER	4211	17
O-RING	1123	18
O-RING	1221	8
O-RING	1311	22
O-RING	1331	6
O-RING	1532	37
O-RING	1541	2
O-RING	1542	24
O-RING	2312	13
O-RING,GASKET&SEAL KIT	3610	3
OUTER RING-SYNCHRO	3142	18
OUTER RING-SYNCHRO	3162	18
OVERHUAL KIT	3610	2
PACKING	1713	9
PACKING-O RING	4121	38
PAD KIT SET-FRT BRAKE DISC	4830	3
PAD KIT SET-RR BRAKE DISC	4841	3
PAD-`A' PILLAR TRIM NO.1	7720	8
PAD-`A' PILLAR TRIM NO.2	7720	10
PAD-`B' PILLAR LOWER TRIM	7720	9
PAD-BRAKE PEDAL	4810	4
PAD-CLUTCH PEDAL	3030	4
PAD-CLUTCH PEDAL	4810	2
PAD-COWL SIDE TRIM	7720	7
PAD-DR INSIDE HANDLE ROD	7110	4
PAD-FENDER MTG SEALING	5720	13
PAD-FOOTREST	4810	7
PAD-HOOD INSULATION	6110	6

PART NAME INDEX

PART NANE	GROUP NO.	
PAD-STOPPER CONTACT	3030	9
PAD-T/GATE I/S HDL SEALG	6410	20
PAD-T/GATE S/KNOB SEAL'G	6410	10
PAN ASSY-OIL	1531	24
PAN ASSY-OIL	1532	26
PANEL A-C/PAD LOWER MAIN	7610	15
PANEL A-CENTER FACIA(-W/G)	7610	17
PANEL A-FRONT DOOR	6210	1
PANEL A-HOOD	6110	2
PANEL A-REAR DOOR	6310	2
PANEL A-REAR DOOR TRIM COMPL	7215	1
PANEL A-SHROUD LOWER	7610	19
PANEL A-SHROUD UPPER	7610	18
PANEL-CLUSTER LOWER	7610	41
PAN-OIL	3614	01
PAWL-PARKING BRAKE	3612	38
PAWL-PARKING BRAKE	3612	38
PAWL-PARKING BRAKE	3612	38
PEDAL A-CLUTCH	3030	3
PEDAL BOX A-BRAKE	4810	1
PIECE-CONNECTION	1712	6
PIECE-THRUST	1221	12
PILLER A-"A"	5230	1
PILLER A-"B"	5240	1
PILLER-"A" OTR LWR	5230	5
PILLER-"A" OTR UPR	5230	3
PILLER-"B" OTR	5240	2
PIN	1311	15
PIN	3176	4
PIN	3611	28
PIN	3612	37
PIN	3612	39
PIN	3612	43
PIN	3612	52
PIN-CLEVIS	3030	12
PIN-CLEVIS	4810	9
PIN-COTTER	4410	17
PIN-COTTER	4411	30
PIN-CYL.	1332	5
PIN-CYLINDERICAL	1211	4
PIN-CYLINDERICAL	1221	9

PART NANE	GROUP NO.	
PIN-CYLINDERICAL	1221	23
PIN-CYLINDERICAL	1311	23
PIN-CYLINDERICAL	1531	21
PIN-CYLINDRICAL	1130	2
PIN-CYLINDRICAL	1311	8
PIN-DETENT	3146	04
PIN-DETENT	3166	04
PIN-DOWEL	3141	6
PIN-DOWEL	3143	04
PIN-DOWEL	3144	04
PIN-DOWEL	3146	14
PIN-DOWEL	3161	06
PIN-DOWEL	3164	04
PIN-DOWEL	3166	17
PIN-DOWEL	3212	33
PIN-DOWEL	3612	61
PIN-DOWEL,ADAPTOR	3143	02
PIN-DOWEL,ADAPTOR	3144	02
PIN-DOWEL,ADAPTOR	3164	02
PIN-DR CHECKER MTG	7110	15
PIN-DR CHECKER MTG	7210	16
PIN-DR OUTSIDE HANDLE ROD	7110	20
PIN-FRT HUB WHEEL	4115	4
PIN-FRT LWR ARM MTG-RR	4411	11
PIN-FULCRUM	4410	2
PIN-JOINT	3176	6
PIN-OIL PUMP RELIEF VALVE	1531	9
PIN-OIL PUMP RELIEF VALVE	1532	8
PIN-PARALLER	3141	7
PIN-PARALLER	3161	07
PIN-PIVOT	3141	8
PIN-PIVOT	3161	08
PIN-ROD ADJUST	3740	9
PIN-ROLLER & RETAINER	3212	15
PIN-SLIDING RAIL	1311	7
PIN-SNAP	3030	27
PIN-SNAP	4810	15
PIN-SPIROL	3211	03
PIN-SPLIT	4620	9
PIN-SPRING	1123	6
PIN-SPRING	1123	12

PART NANE	GROUP NO.	
PIN-SPRING	1124	12
PIN-SPRING	1124	14
PIN-SPRING	1211	18
PIN-SPRING	1522	8
PIN-SPRING	1531	6
PIN-SPRING	1532	12
PIN-SPRING	3145	04
PIN-SPRING	3145	08
PIN-SPRING	3146	09
PIN-SPRING	3146	11
PIN-SPRING	3165	04
PIN-SPRING	3165	08
PIN-SPRING	3166	08
PIN-SPRING	3166	10
PIN-SPRING	3211	30
PIN-SPRING	4121	11
PIN-SPRING	4211	9
PIN-SPRING,FORK,SHIFT	3145	02
PIN-SPRING,FORK,SHIFT	3165	02
PIPE A-EXH CTR	2421	9
PIPE A-EXH TAIL	2421	12
PIPE A-EXH TAIL	2422	12
PIPE ASSY-HOT WATER INLET	1522	29
PIPE ASSY-OIL COOLANT	1542	20
PIPE-LIQUID "A"	6820	10
PIPE-LIQUID "B"	6820	11
PISTON ASSY	1130	33
PISTON ASSY-CLUTCH	3611	42
PISTON ASSY-CLUTCH	3611	42
PISTON ASSY-CLUTCH	3611	42
PISTON ASSY-CLUTCH	3615	24
PISTON ASSY-CLUTCH	3615	26
PISTON ASSY-CLUTCH	3616	28
PISTON ASSY-CLUTCH	3616	28
PISTON-FRT SERVO	3612	27
PISTON-OIL PUMP RELIEF VALVE	1531	7
PISTON-OIL PUMP RELIEF VALVE	1532	6
PISTON-RR SERVO	3612	31
PLATE	1130	19
PLATE A-BATTERY TRAY	5720	29
PLATE A-BODY MTG #5,UPR	5120	22

PART NANE	GROUP NO.	
PLATE ASSY-CONTACT	3611	29
PLATE ASSY-DRIVE	1130	18
PLATE A-TUBE MTG	4010	24
PLATE -DRIVE	1130	15
PLATE-BAFFLE	1531	22
PLATE-BAFFLE	1532	22
PLATE-CAM RETAINING	3612	46
PLATE-CAM RETAINING	3612	46
PLATE-CLUTCH	3615	09
PLATE-CLUTCH	3615	09
PLATE-DISTANCE	1430	4
PLATE-ENG MTG RR	3710	9
PLATE-INSIDE RR VIEW MIRROR BASE	7840	3
PLATE-INTER LOCK	3145	06
PLATE-INTER LOCK	3165	06
PLATE-OFFSET	3146	15
PLATE-OFFSET	3166	13
PLATE-PUMP COVER	3611	50
PLATE-REVERSE LOCK	3145	14
PLATE-REVERSE LOCK	3165	14
PLATE-STOPPER	3145	11
PLATE-STOPPER	3165	11
PLATE-THRUST	3211	12
PLATE-THRUST	3615	16
PLATE-THRUST	3615	19
PLATE-THRUST	3615	21
PLUG	1541	8
PLUG	3146	22
PLUG	3166	14
PLUG ASSY	1211	15
PLUG ASSY-SCREW	1311	17
PLUG HFM ADJUST	1490	3
PLUG-ASS`Y, DRAIN	3141	10
PLUG-ASS`Y, DRAIN	3161	10
PLUG-BLIND	5120	11
PLUG-BLIND	2312	33
PLUG-BLIND SLOT	6410	4
PLUG-DRAIN	1531	28
PLUG-DRAIN	1532	34
PLUG-EXPANSION	1123	10
PLUG-EXPANSION	1124	6

PART NAME INDEX

PART NANE	GROUP NO.	
PLUG-EXPANSION	1211	14
PLUG-EXPANSION	1211	19
PLUG-EXPANSION	1211	21
PLUG-EXPANSION	1221	24
PLUG-EXPANSION	1521	10
PLUG-EXPANSION	1123	11
PLUG-EXPANSION	1124	10
PLUG-EXPANSION	1331	4
PLUG-FILLER	3612	63
PLUG-FILLER	3612	63
PLUG-FILLER&DRAIN	4121	5
PLUG-FILLER/DRAIN	4211	25
PLUG-OIL FILLER	3141	11
PLUG-OIL FILLER	3161	11
PLUG-OIL PUMP RELIEF VALVE	1531	10
PLUG-OIL PUMP RELIEF VALVE	1532	9
PLUG-PIPE	3212	41
PLUG-SCREW	1123	4
PLUG-SCREW	1124	22
PLUG-SCREW	1221	5
PLUG-SCREWED	1124	5
PLUG-SPEEDO	3212	45
PLUNGER-ROLLING	3146	20
PLUNGER-ROLLING	3166	16
PNL A-"B" PILLER INR	5210	24
PNL A-"D"PILLER OTR	5210	9
PNL A-A/CON (AUTO)	6810	8
PNL A-CLUSTER FACIA	7610	7
PNL A-CLUSTER FACIA LOWER	7610	2
PNL A-COWL COMPL	5730	1
PNL A-COWL SIDE INR	5230	11
PNL A-COWL,UPR	5730	5
PNL A-DASH COMPL	5730	11
PNL A-FRT DR TRIM COMPL	7115	1
PNL A-FRT END COMPL	5710	1
PNL A-FRT FLR	5610	1
PNL A-FRT/APRON COMPL	5720	41
PNL A-FRT/APRON COMPL	5720	42
PNL A-QUARTER INR COMPL	5210	14
PNL A-QUARTER OTR	5210	1
PNL A-SIDE SILL INR	5610	2

PART NANE	GROUP NO.	
PNL A-T/GATE INR	6410	1
PNL A-T/GATE TRIM	6410	19
PNL A-WHEEL HOUSE INR	5210	19
PNL-"D" PILLER OTR,LH	5210	10
PNL&HINGE A-FUEL FILLER DR	7090	8
PNL-BACK OTR	5620	9
PNL-FENDER	5720	1
PNL-ROOF	5510	1
PNL-RR FLOOR	5620	1
PNL-SIDE SILL OTR	5210	22
PNL-WATER DEFLECTOR	5210	8
PNL-WHEEL HOUSE INR	5210	20
PNL-WHEEL HOUSE OTR	5210	18
PORT-COOLANT OTLT	1522	12
PORT-COOLANT OTLT	1522	20
PROTECTOR ASSY-ABS HOLE MTG	4211	55
PROTECTOR ASSY-HEAT	1722	5
PROTECTOR ASSY-HEAT	1723	9
PROTECTOR ASSY-TOP	1723	10
PROTECTOR-F/TANK	2210	24
PULLEY	1452	2
PULLEY ASSY-A/T TENSIONER	1331	19
PULLEY ASSY-AUTO TENSIONER	1332	21
PULLEY ASSY-IDLER	1331	9
PULLEY ASSY-IDLER	1332	12
PULLEY-COOLING FAN	1332	10
PULLEY-WATER PUMP	1521	7
PULLEY-WATER PUMP	1522	32
PUMP A-FUEL	2210	2
PUMP ASSY	3611	32
PUMP ASSY	3611	32
PUMP ASSY	3611	32
PUMP ASSY	3611	33
PUMP ASSY	3611	33
PUMP ASSY-GEROTOR	3211	31
PUMP ASSY-OIL	1531	1
PUMP ASSY-OIL	1532	1
PUMP ASSY-WATER	1521	1
PUMP ASSY-WATER	1522	1
PUMP-POWER STRG	4641	13
QUARTER INR & WHEEL HOUSE A	5210	13

PART NANE	GROUP NO.	
R160M-0001	2312	7
RACE-OTR	3616	36
RACK A-ROOF	7940	12
RADIATOR A-COOLING	2111	1
RAIL A-ROOF FRT	5510	6
RAIL A-ROOF RR	5510	9
RAIL A-ROOF SIDE	5210	21
RAIL ASSY-CLAMPING	1311	4
RAIL ASSY-SLIDING	1311	5
RAIL-ROOF CTR NO.1	5510	7
RAIL-ROOF CTR NO.2	5510	5
RAIL-ROOF CTR NO.3	5510	8
RAIL-ROOF DRIP FRT	5230	4
RAIL-ROOF DRIP,RR	5510	4
RAIL-SHIFT,1&2	3145	16
RAIL-SHIFT,1&2	3165	16
RAIL-SHIFT,3&4	3145	12
RAIL-SHIFT,3&4	3165	12
RAIL-SHIFT,5&R	3145	10
RAIL-SHIFT,5&R	3165	10
RAIL-SLIDING,UPPER	1311	9
REAR DOOR TRIM	7215	1
REAR SEAT ARM REST O-RING	7520	6
RECEIVER & BRKT A	6820	6
RECLINER A	7410	10
RECLINER A	7420	14
RECLINER A-REAR	7520	43
RECLINER.COVER REAR	7520	18
REGULATOR A-REAR DOOR POWER WINDC	7220	1
REGULATOR-FRT DR POWER WINDOW	7120	1
REINF A-"B" PILLER OTR	5240	4
REINF A-`D' PILLER INR	5210	17
REINF A-A/CLEANER #3	5720	34
REINF A-FRT END UPR	5710	21
REINF A-HOOD HINGE	6110	9
REINF A-QUARTER INR UPR	5210	15
REINF A-RR DR STRIKER	5210	5
REINF A-RR SEAT HINGE MTG	5620	12
REINF-"A" PILLER UPR	5230	9
REINF-"C" PILLER INR	5210	16
REINF-"C" PILLER OTR	5210	7

PART NANE	GROUP NO.	
REINF-F/APRON LWR	5720	3
REINF-FRT DR HGE UPR	5230	13
REINF-FRT/APRON LWR	5720	24
REINF-LWR ARM MTG	4010	23
REINF-RR DR STRIKER	5210	6
REINF-RR SEAT STRIKER MTG	5620	3
REINF-SIDE SILL OTR	5210	23
REINF-TAIL GATE GUIDE BUMPER BRKT	5620	6
REINFT-OIL COOLER	1542	15
RELAY A-MINI 4P,N/O	8410	2
RELAY A-POWER(1T)	8410	1
RELAY A-POWER(3P)	8410	1
RELAY A-POWER(5P,W/BRKT)	8410	5
RELAY A-POWER(5P,W/COVER)	8410	3
RELAY A-POWER,5P	8410	8
RELAY A-PWR(4P,N/C,WO/BRKT	8410	4
RELAY-FUEL PUMP	1430	10
RELAY-OVERVOLTAGE PROTECTION	1430	13
REPAIR KIT ARMATURE	1453	12
REPAIR KIT-FRT BRAKE CALIPER	4830	9
REPAIR KIT-P/BRAKE	4841	16
REPAIR KIT-RR BRAKE CALIPER	4841	9
RESERVIOR TANK-WINDSHIELD	7820	18
RESISTOR A	6840	28
RESISTOR-CONDENSER FAN	6820	21
RETAINER	1542	6
RETAINER	3612	55
RETAINER	3616	37
RETAINER-DETENT SPRING	3613	16
RETAINER-DR LOCK	7010	3
RETAINER-HOOD STAY ROD	5710	13
RETAINER-OIL SEAL	4211	46
RETAINER-SOLENOID	3611	48
RETAINER-SOLENOID	3611	48
RETAINER-SOLENOID	3613	09
RETAINER-SOLENOID	3613	12
RETAINER-SPRING	3611	44
RETAINER-SPRING	3615	28
RETAINER-SUNVISOR	7770	2
RETAINER-VALVE SPRING UPR	1211	33
RETAINER-VALVE SPRING, UNDER	1211	31

PART NAME INDEX

PART NANE	GROUP NO.	
RETANER-SPRING	3616	30
RING	1452	7
RING KIT-P/STRG GEAR BOX	4620	10
RING SET-PISTON	1130	34
RING-ABS,DISC	4211	41
RING-CRANKSHAFT COVER	1130	22
RING-EXHAUST VALVE SEAT	1211	28
RING-INTAKE VALVE SEAT	1211	27
RING-LOCK	1311	19
RING-O	1123	5
RING-O	1124	7
RING-O	1124	9
RING-O	1311	26
RING-O	1430	2
RING-O	1521	12
RING-O	1521	16
RING-O	1522	6
RING-O	1522	9
RING-O	1522	18
RING-O	1522	21
RING-O	1522	25
RING-O	1522	27
RING-O	1531	32
RING-O	1532	39
RING-O	1542	3
RING-O	1542	25
RING-O	3166	23
RING-O	3611	03
RING-O	3611	04
RING-O	3611	05
RING-O	3611	07
RING-O	3611	08
RING-O	3611	09
RING-O	3612	03
RING-O	3612	04
RING-O	3612	05
RING-O	3612	06
RING-O	3612	07
RING-O	3612	08
RING-O	3613	02
RING-O	3613	03

PART NANE	GROUP NO.	
RING-O	3614	09
RING-O	3614	10
RING-O	3615	01
RING-O	3615	02
RING-O	3615	03
RING-O	3616	01
RING-O	3616	02
RING-O	3616	03
RING-RETAINER	3142	30
RING-RETAINER	3162	30
RING-RETAINER	4211	43
RING-RETAINER,10TH& IDLER SHAFT	3144	03
RING-RETAINER,10TH&IDLER SHAFT	3162	34
RING-RETAINER,10TH&IDLER SHAFT	3164	03
RING-RETAINER,11TH& IDLER SHAFT	3144	03
RING-RETAINER,11TH&IDLER SHAFT	3162	34
RING-RETAINER,11TH&IDLER SHAFT	3164	03
RING-RETAINER,12TH& IDLER SHAFT	3144	03
RING-RETAINER,12TH&IDLER SHAFT	3162	34
RING-RETAINER,12TH&IDLER SHAFT	3164	03
RING-RETAINER,3RD&4TH HUB	3142	05
RING-RETAINER,3RD&4TH HUB	3162	05
RING-RETAINER,3RD&5TH HUB	3162	05
RING-RETAINER,3RD&6TH HUB	3162	05
RING-RETAINER,5TH& IDLER SHAFT	3143	03
RING-RETAINER,5TH& IDLER SHAFT	3144	03
RING-RETAINER,5TH&IDLER SHAFT	3142	34
RING-RETAINER,5TH&IDLER SHAFT	3162	34
RING-RETAINER,5TH&IDLER SHAFT	3164	03
RING-RETAINER,6TH& IDLER SHAFT	3144	03
RING-RETAINER,6TH&IDLER SHAFT	3162	34
RING-RETAINER,6TH&IDLER SHAFT	3164	03
RING-RETAINER,7TH& IDLER SHAFT	3144	03
RING-RETAINER,7TH&IDLER SHAFT	3162	34
RING-RETAINER,7TH&IDLER SHAFT	3164	03
RING-RETAINER,8TH& IDLER SHAFT	3144	03
RING-RETAINER,8TH&IDLER SHAFT	3162	34
RING-RETAINER,8TH&IDLER SHAFT	3164	03
RING-RETAINER,9TH& IDLER SHAFT	3144	03
RING-RETAINER,9TH&IDLER SHAFT	3162	34
RING-RETAINER,9TH&IDLER SHAFT	3164	03

PART NANE	GROUP NO.	
RING-RETAINING	3211	11
RING-RETAINING	3612	13
RING-RETAINING	3612	16
RING-RETAINING	3612	17
RING-RETAINING	3615	22
RING-RETAINING	3616	23
RING-RETAINNING	3611	24
RING-RETURN	3176	5
RING-SEAL	1521	18
RING-SEAL	1521	25
RING-SEAL	1522	17
RING-SEAL	1541	13
RING-SEAL	1542	11
RING-SEAL	1712	2
RING-SEAL	1712	7
RING-SEAL	1713	7
RING-SEAL	3611	06
RING-SEAL	3611	11
RING-SEAL	3611	12
RING-SEAL	3611	13
RING-SEAL	3616	04
RING-SEAL	3616	05
RING-SEALING	1211	16
RING-SEALING	1221	6
RING-SEALING	1541	9
RING-SEALING	1311	12
RING-SEALING	1311	16
RING-SNAP	1130	35
RING-SNAP	1311	13
RING-SNAP	1542	7
RING-SNAP	1842	5
RING-SNAP	1843	5
RING-SNAP	3211	07
RING-SNAP	3211	08
RING-SNAP	3211	39
RING-SNAP	3212	05
RING-SNAP	3212	18
RING-SNAP	3212	32
RING-SNAP	3212	56
RING-SNAP	3611	25
RING-SNAP	3612	14

PART NANE	GROUP NO.	
RING-SNAP	3612	15
RING-SNAP	3615	23
RING-SNAP	3616	16
RING-SNAP	3616	22
RING-SNAP	3616	24
RING-SNAP	4121	36
RING-SNAP,WORM	3162	36
RING-SYNCHRO	3142	06
RING-SYNCHRO	3162	06
RIVET-BLIND	7880	14
ROD & BELL CRANK A-RR DR	7210	4
ROD & BUSH A-LATERAL	4511	15
ROD ACTUATOR A-DR LOCK,FRT	7110	21
ROD ACTUATOR A-DR LOCK,TAIL GATE	7310	8
ROD A-MUFFLER MTG RR	2421	17
ROD A-MUFFLER MTG RR	2421	18
ROD A-MUFFLER MTG RR	2422	17
ROD A-MUFFLER MTG RR	2422	18
ROD ASSY-ACTUATING	3612	45
ROD ASSY-CONNECTING	1842	11
ROD-A/T LEVER	3740	8
ROD-EXH FRT MTG	4010	35
ROD-FRT DR	7110	22
ROD-FRT DR INSIDE HANDLE	7110	3
ROD-FRT DR SAFETY LOCK	7110	6
ROD-FRT SERVO PUSH	3612	23
ROD-HOOD STAY	5710	7
ROD-MUFR MTG	4010	34
ROD-RR DR ACTUATOR	7210	6
ROD-RR DR INSIDE HANDLE	7210	5
ROD-RR SERVO	3612	58
ROD-TAIL GATE DOOR	7310	3
ROD-TAIL GATE LOCK	7310	4
ROD-TAIL GATE SAFETY KNOB	7310	2
ROLLER	1842	4
ROLLER	1843	4
ROLLER-NEEDLE	3211	23
RR WHEEL GUARD	7920	8
RUBBER CAP	1624	5
RUBBER MTG	1440	8
RUBBER SEAT-RR SPRG UPR	4511	2

PART NAME INDEX

PART NANE	GROUP NO.	
RUBBER-GEAR HSG MTG	4620	6
S/W A-"P" POSITION	3740	3
S/W A-O/S MIRROR W/LEVEL'G	8510	19
S/W A-P/WINT MODE SEL	3740	6
SCREEN ASSY-OIL PUMP	1531	4
SCREEN ASSY-OIL PUMP	1532	4
SCREW	1123	7
SCREW	1331	7
SCREW	1440	7
SCREW	1440	11
SCREW	1441	12
SCREW	1452	6
SCREW	1452	8
SCREW	1453	11
SCREW	1453	13
SCREW	1521	17
SCREW	1541	7
SCREW	1712	5
SCREW	3212	50
SCREW	3611	27
SCREW	3611	49
SCREW	3612	44
SCREW	3612	47
SCREW	3613	08
SCREW	3613	11
SCREW	3613	13
SCREW	3613	15
SCREW	3614	02
SCREW	3616	34
SCREW	7420	10
SCREW	7610	36
SCREW-COUNTER SUNK	3146	13
SCREW-COUNTER SUNK	3166	12
SCREW-COUNTER SUNK	7110	16
SCREW-COUNTER SUNK	7210	17
SCREW-COUNTER SUNK	7310	7
SCREW-DR CHKR MTG	6210	5
SCREW-DR CHKR MTG	6310	5
SCREW-HEX	8920	
SCREW-HEX SEMS	2010	23
SCREW-HEX SEMS	2111	13

PART NANE	GROUP NO.	
SCREW-HEX SEMS	2120	12
SCREW-HEX SEMS	2120	22
SCREW-HEX SEMS	2130	34
SCREW-HEX SEMS	2130	34
SCREW-HEX SEMS	2421	26
SCREW-HEX SEMS	2422	26
SCREW-HEX SEMS	3710	8
SCREW-HEX SEMS	3740	11
SCREW-HEX SEMS	4115	16
SCREW-HEX SEMS	4890	4
SCREW-HEX SEMS	5710	19
SCREW-HEX SEMS	6810	17
SCREW-HEX SEMS	6820	26
SCREW-HEX SEMS	6850	25
SCREW-HEX SEMS	7090	9
SCREW-HEX SEMS	7120	9
SCREW-HEX SEMS	7610	35
SCREW-HEX SEMS FOR NO.14 MTG	4821	27
SCREW-HEXAGON SEMS	7220	17
SCREW-LATCH MTG	7110	18
SCREW-LATCH MTG	7210	18
SCREW-LOCK	1331	3
SCREW-PAN SEMS	7740	14
SCREW-PAN SEM'S	7120	11
SCREW-PAN SEM'S	7220	20
SCREW-REAR DOOR DIVISION CHNL MOUN	7220	14
SCRIVET	7530	13
SCRIVET	7870	4
SCRIVET	7880	10
SCRIVET	7920	4
SCRIVET-DOOR TRIM MOUNTING	7215	16
SCRIVET-DR TRIM MTG	7115	17
SDM A-SINGLE	8810	4
SEAL RING	1331	8
SEAL RING	1541	6
SEAL RING	1124	21
SEAL STRIP-FRT DR GLASS GRIP	7120	7
SEAL STRIP-REAR DOOR GLASS GRIP	7220	4
SEAL-CAMSHAFT	1221	18
SEAL-CASSETTE	1521	2
SEAL-CASSETTE	1522	2

PART NANE	GROUP NO.	
SEAL-DUST,FRT AXLE SHAFT	4010	10
SEAL-FRT DR TRIM	7121	5
SEAL-FRT HUB OIL	4115	5
SEALING-CRANK SHAFT RR	1123	14
SEALING-CRANK SHAFT RR	1124	16
SEALING-CRK/SHT,FRT	1331	2
SEALING-CRK/SHT,FRT	1332	2
SEALING-SPARK PLUG HOLE	1221	16
SEALING-VENTILATION	1221	15
SEAL-M/VAC MTG	4850	11
SEAL-OIL	3211	04
SEAL-OIL	3212	03
SEAL-OIL	3212	08
SEAL-OIL	3212	31
SEAL-OIL	3212	40
SEAL-OIL	3611	10
SEAL-OIL	3612	09
SEAL-OIL	3612	10
SEAL-OIL	3612	10
SEAL-OIL	3612	10
SEAL-OIL,CONTROL	3146	05
SEAL-OIL,CONTROL	3166	05
SEAL-OIL,INPUT	3141	5
SEAL-OIL,INPUT	3161	05
SEAL-OIL,OUTPUT	3146	17
SEAL-OIL,OUTPUT	3166	19
SEAL-'O'RING	4850	4
SEAL-REAR DOOR TRIM	7221	3
SEALRING	2312	3
SEAL-RING	1123	8
SEAL-RING	1124	23
SEAL-T/GATE TRIM	6410	23
SEAL-VALVE STEM	1211	30
SEAT A-FRONT	7410	1
SEAT A-FRONT	7410	2
SEAT A-REAR	7510	14
SEAT BACK A-FRONT	7420	17
SEAT BACK A-REAR	7520	1
SEAT BACK A-REAR	7520	2
SEAT BELT A-FRT ELR 3PT	7430	1
SEAT BELT A-REAR 2PT STATIC,CENTER	7530	8

PART NANE	GROUP NO.	
SEAT BELT A-REAR 3PT ELR	7530	7
SEAT-SPRING	3612	25
SEAT-TORSION BAR END	4420	20
SEAT-TORSION BAR H/CONTROL	4420	13
SENSOR A-AMBIENT	8510	11
SENSOR ASSY-CAM POSITION	1311	25
SENSOR ASSY-COOLANT	1522	16
SENSOR ASSY-O_2	1722	7
SENSOR ASSY-O2	1723	8
SENSOR ASSY-SPEED	3212	44
SENSOR A-SUN	8510	10
SENSOR A-WHEEL SPEED FRT	4890	1
SENSOR A-WHEEL SPEED RR	4890	2
SENSOR-AIR TEMPERATURE	1430	9
SENSOR-CRANKSHAFT POSITION	1430	1
SENSOR-KNOCK	1712	8
SENSOR-WATER TEMP	1521	24
SENSOR-WATER TEMP	1522	15
SENSOR-WATER TEMP DOUBLE	1521	26
SHAFT ASS`Y-INPUT, SMF	3142	03
SHAFT ASS`Y-INPUT, SMF	3142	03
SHAFT ASS`Y-INPUT, SMF	3162	03
SHAFT ASSY-FRT AXL	4010	7
SHAFT ASSY-INPUT	3211	16
SHAFT ASSY-OIL PUMP DRIVE	1531	11
SHAFT ASSY-OIL PUMP DRIVE	1531	12
SHAFT ASSY-OIL PUMP DRIVE	1532	10
SHAFT ASSY-OIL PUMP DRIVEN	1532	11
SHAFT ASSY-OUTPUT	3211	28
SHAFT ASSY-OUTPUT	3616	39
SHAFT ASSY-OUTPUT	3616	39
SHAFT ASSY-OUTPUT	3616	39
SHAFT ASSY-PROPELLER FRT	3310	1
SHAFT ASSY-PROPELLER RR	3310	4
SHAFT A-STRG LWR	4613	3
SHAFT-ASSY-OVERDRIVE	3611	45
SHAFT-AXLE	4121	40
SHAFT-AXLE	4211	39
SHAFT-COUNTER	3143	01
SHAFT-COUNTER	3163	01
SHAFT-DIFF PINION	4121	13

PART NAME INDEX

PART NANE	GROUP NO.	
SHAFT-DIFF PINION	4211	8
SHAFT-FRT OUTPUT	3212	53
SHAFT-MAIN,2WD	3162	14
SHAFT-MAIN,4WD	3142	14
SHAFT-MANUAL VALVE DETENT	3612	50
SHAFT-OUTPUT	3211	29
SHAFT-PINION	3211	20
SHAFT-RAIL	3212	23
SHAFT-REVERSE IDLER	3143	05
SHAFT-REVERSE IDLER	3144	05
SHAFT-REVERSE IDLER	3164	05
SHAFT-SHIFT,R200	3146	06
SHAFT-SHIFT,R200	3166	06
SHAST ASSY-INPUT	3611	41
SHIELD A-A/INTAKE	2312	14
SHIELD COVER-FRONT	7410	11
SHIELD COVER-FRONT	7420	9
SHIELD-DUST BRK FRT	4115	10
SHIELD-RR DISC BRAKE DUST	4841	4
SHIFT-SHAFT	3212	24
SHIM	1311	24
SHIM	3611	39
SHIM	3611	39
SHIM	3611	39
SHIM	3612	19
SHIM	3612	19
SHIM	3612	19
SHIM	3612	19
SHIM	3612	19
SHIM	3612	19
SHIM	3612	19
SHIM	3612	19
SHIM	4010	8
SHIM-C/S	3143	03
SHIM-C/S	3163	03
SHIM-DIFF SIDE BRG.	4121	8
SHIM-DIFF. SIDE	4211	22
SHIM-DOOR STRIKER	7310	6
SHIM-DR STRIKER	7110	7
SHIM-DR STRIKER	7210	7

PART NANE	GROUP NO.	
SHIM-FRT CAMBER	4410	7
SHIM-FRT CASTER	4410	8
SHIM-INPUT	3142	01
SHIM-INPUT	3162	01
SHIM-PINION BRG. OUTER	4121	22
SHIM-PINION BRG. OUTER	4211	15
SHIM-PINION BRG.INNER	4121	20
SHIM-PINION BRG.INNER	4211	13
SHK/ABS A-GAS FRT	4411	3
SHK/ABS A-GAS RR	4511	4
SHOCK ABSORBOR ASSY	1331	14
SHOE ASSY-P/BRAKE	4841	15
SHROUD A-C/FAN	2120	6
SHROUD-C/FAN	2120	6
SIDE MBR A	4010	2
SIDE MBR A	4010	3
SLEEVE	1130	28
SLEEVE	1211	3
SLEEVE	1221	11
SLEEVE A-HEAD REST	7420	8
SLEEVE-ACTUATING CLU	3615	25
SLEEVE-BRG,1ST.	3142	24
SLEEVE-BRG,1ST.	3162	24
SLEEVE-BRG,REV.	3142	25
SLEEVE-BRG,REV.	3162	25
SLEEVE-HEAD REST	7420	28
SLEEVE-SYNCHRO,DOUBLE	3142	21
SLEEVE-SYNCHRO,DOUBLE	3162	21
SLEEVE-SYNCHRO,SINGLE	3142	11
SLEEVE-SYNCHRO,SINGLE	3162	11
SNAP RING	4211	42
SOCKET A-POWER	7740	15
SOCKET ASSY-BALL	1842	13
SOCKET BOLT,M10X16.7	7420	26
SOCKET BOLT-ROUND	7520	20
SOLENOID	3611	26
SOLENOID	3613	05
SOLENOID	3613	06
SOLENOID	3613	07
SPACER	3212	10
SPACER	3212	27

PART NANE	GROUP NO.	
SPACER	3212	55
SPACER	4121	21
SPACER	4211	14
SPACER 'A'-REAR BUMPER	7880	9
SPACER A-WINDSHIELD,LWR	7840	8
SPACER A-WINDSHIELD,LWR1	7840	6
SPACER 'B'-REAR BUMPER	7880	8
SPACER-BOOSTER MTG	4850	8
SPACER-C/S	3143	05
SPACER-C/S	3163	06
SPACER-FRT AXLE MTG	4310	4
SPACER-NEEDLE	3211	24
SPACER-PINION	3211	25
SPACER-REAR BUMPER.NO3	7880	7
SPACER-REVERSE IDLER	3144	10
SPACER-REVERSE IDLER	3164	10
SPACER-THRUST	3616	21
SPANNER	9110	8
SPARK PLUG	1441	16
SPARK PLUG	1440	15
SPEAKER & PROTECTOR A-FRT	8610	14
SPEAKER A-FRT	8610	5
SPEAKER A-RR (3WAYS)	8610	2
SPEAKER GRILLE-FRT DR	7115	31
SPEAKER-PROTECTOR FRT	8610	1
SPECIAL BOLT-3.2	7520	16
SPLASH GUARD	7920	5
SPRING	1531	8
SPRING	1532	7
SPRING	3030	10
SPRING	3146	21
SPRING	3166	15
SPRING	3211	37
SPRING	3611	43
SPRING	3612	21
SPRING	3612	24
SPRING	3612	26
SPRING	3612	28
SPRING	3612	32
SPRING	3612	40
SPRING	3612	42

PART NANE	GROUP NO.	
SPRING	3612	51
SPRING	3615	27
SPRING	3615	27
SPRING	3616	29
SPRING-BRAKE PDL RETURN	4810	3
SPRING-COMPRESSION	1311	14
SPRING-HOOD HINGE	6110	5
SPRING-LOCKUP FORK	3212	25
SPRING-OIL FILTER BYPASS	1542	5
SPRING-OIL FLTR NONRETURN VLV	1541	5
SPRING-OIL PUMP CHAIN	1531	20
SPRING-OIL PUMP CHAIN	1532	20
SPRING-RETURN	1842	8
SPRING-RETURN	1843	7
SPRING-RETURN	3212	22
SPRING-REVERSE LOCK	3145	13
SPRING-REVERSE LOCK	3165	13
SPRING-SYNCHRO	3142	08
SPRING-SYNCHRO	3162	08
SPRING-TENSION	7520	14
SPRING-TORSION	1842	7
SPRING-VALVE	1211	32
SPROCKET ASSY-CRANKSHAFT	1130	4
SPROCKET-CAMSHAFT	1311	21
SPROCKET-DRIVE	3211	35
SPROCKET-DRIVE	3212	54
SPROCKET-OIL PUMP	1531	14
SPROCKET-OIL PUMP	1532	14
SRING ASSY-DETENT	3613	17
STAB/BAR-FRT SUSP	4420	1
STEP-REAR BUMPER	7880	19
STICKER-ABS	7950	8
STICKER-AIR BAG	7950	17
STOPPER A-A/PEDAL	2010	22
STOPPER A-ENG MRG	1990	2
STOPPER-ENG MTG FRT	1990	3
STOPPER-RADIATOR MTG	2111	3
STOPPER-RADIATOR MTG	2111	4
STOPPER-S/TIRE	4180	7
STRAINER ASSY-OIL PUMP	1531	35
STRIKER & S/HOOK A-HOOD	5710	10

PART NAME INDEX

PART NANE	GROUP NO.	
STRIKER A-DOOR	7310	5
STRIKER A-DR	7110	2
STRIKER A-DR	7210	1
STRIKER A-GLOVE BOX	7610	23
STRIKER-REAR SEAT	7510	15
STRIP A-HOOD H/LAMP SEAL	5710	4
STRIP A-HOOD H/LAMP SEAL	5710	5
STRIP ASSY-GROUND	1430	8
STRUT-APPLY	3612	56
STRUT-FRT BAND	3612	54
STRUT-RR SERVO ANCHOR	3612	57
STUD	1453	9
SUNVISOR & PIVOT A	7770	1
SUPPORT ASSY	1842	9
SUPT A-COWL SIDE UPR	5730	4
SUPT ASSY-CTR	3616	33
SUPT ASSY-CTR	3616	33
SWITCH A-4WD P/TIME	8510	13
SWITCH A-CLUTCH INTERLOCK	3030	26
SWITCH A-CLUTCH INTERLOCK	8510	17
SWITCH A-DEF & MIRROR HTD	8510	5
SWITCH A-DR(2P)	8510	15
SWITCH A-FRT FOG LAMP	8510	6
SWITCH A-GLOVE BOX	8510	16
SWITCH A-HAZARD	8510	2
SWITCH A-KICK DOWN (4P)	8510	18
SWITCH A-M/FUNCTION	8510	25
SWITCH A-P/BRAKE	4910	5
SWITCH A-POWER WINDOW,MAIN	7115	19
SWITCH A-POWER WINDOW,SUB	7115	20
SWITCH A-POWER WINDOW,SUB	7215	19
SWITCH A-RR FOG LAMP	8510	3
SWITCH A-RR WASHER & WIPER	8510	12
SWITCH A-S/LAMP(4P)	4810	6
SWITCH A-SEAT HEATER	8510	9
SWITCH ASSY-BACK LAMP	3141	12
SWITCH ASSY-BACK LAMP	3161	12
SWITCH ASSY-INHIBITOR	3612	18
SWITCH ASSY-INHIBITOR	3612	18
SWITCH MAGNET	1453	10
SWITCH-OIL PRESSURE	1541	12
SWITCH-OIL PRESSURE	1542	10
SYNCHRO RING ASS`Y-DOUBLE	3142	16
SYNCHRO RING ASS`Y-DOUBLE	3162	16
T/SCREW-PAN	8310	15
T/SCREW-TRUSS	6410	38
T/SCREW-TRUSS	8910	14
T/SCREW-TRUSS SEMS	7215	13
TANK A-FUEL	2210	1
TANK A-WINDSHIELD WASHER RESERVIOR	7820	4
TANK A-WINDSHIELD WASHER RESERVIOR	7820	16
TANK-COMPL RSVR	2130	8
TANK-RR WASHER RESERVIOR	7820	12
TAPE-DOOR TOOLING HOLE SEALING	7221	4
TAPE-DOOR TRIM SEAL	7221	6
TAPE-DR TOOLING HOLE SEALING	6410	25
TAPE-DR TOOLING HOLE SEALING	7121	6
TAPE-DR TRIM SEAL	7121	8
TAP'G SCREW-PAN	7115	14
TAP'G SCREW-PAN	7215	12
TAP'G SCREW-PAN SEMS	7940	11
TAP'G SCREW-TRUSS	7110	19
TAP'G SCREW-TRUSS	7110	24
TAP'G SCREW-TRUSS	7210	19
TAP'G SCREW-TRUSS	7215	14
TAP'G SCREW-TRUSS	7221	22
TAP'G SCREW-TRUSS	7610	34
TAP'G SCREW-TRUSS	7720	20
TAP'G SCREW-TRUSS	7720	21
TAP'G SCREW-TRUSS	7740	13
TAP'G SCREW-TRUSS	7121	22
TAP'G SCREW-TRUSS	7210	24
TAPPET ASSY-HYDRAULIC	1211	35
TENSIONER ASSY-BELT	1331	16
TENSIONER ASSY-OIL PUMP CHAIN	1531	19
TENSIONER-OIL PUMP CHAIN	1532	19
TERMINAL A-BATT CBL(+)	2610	6
THERMOSTAT ASSY-COOLANT	1522	11
THERMOSTAT-COOLANT	1521	11
THERMOSTAT-COOLANT	1522	10
TIGHTENER ASSY-BELT	1332	19
TIGHTENER ASSY-CHAIN	1311	11
TIRE	4170	3
TOP'G SCREW-PAN	7090	10
TORSION BAR	4420	8
TRANSMISSION ASS`Y	3160	
TRANSMISSION-AUTOMATIC	3610	1
TRANSPONDER-IMMOBILIZER	7010	6
TRAY-2ND ARM REST	7630	12
TRAY-CONSOLE	7630	6
TRAY-FRONT ASH TRAY	7610	31
TRIM A-"A" PILLAR	7730	1
TRIM A-"B" PILLAR LOWER	7730	3
TRIM A-COWL SIDE	7720	16
TRIM A-DOOR SCUFF FRONT	7720	14
TRIM A-DOOR SCUFF REAR	7720	15
TRIM A-QTR UPPER	7730	6
TRIM A-ROOF REAR	7730	5
TRIM A-RR COMBI LAMP COVER	7740	6
TRIM A-RR SERVICE COVER	7740	7
TRIM A-TRUNK SIDE FRONT	7730	8
TRIM A-TRUNK SIDE RR	7740	4
TRIM A-TRUNK SIDE RR	7740	5
TRIM-COWL SIDE	7720	17
TRIM-RR TRANSVERSE	6410	32
TUBE A-2W/CON TO RR HOSE	4821	8
TUBE A-A/T OUTLET	3750	4
TUBE A-A/T RAD	3750	7
TUBE A-GEAR TO HOSE	4641	5
TUBE A-H.M TO 2 W/CON	4821	5
TUBE A-H.M TO FRT	4821	3
TUBE A-H.M TO FRT	4821	7
TUBE A-HOSE TO HOSE	4641	3
TUBE A-HOSE TO RAD	3750	11
TUBE A-M/CYL PRI TO H.M	4821	1
TUBE A-M/CYL SEC TO H.M	4821	2
TUBE A-M/CYL TO R/CYL	3020	2
TUBE A-REAR BRAKE	4821	4
TUBE A-REAR BRAKE	4821	6
TUBE ASSY-FUEL	1623	1
TUBE ASSY-FUEL	1624	1
TUBE ASSY-OIL DIPSTICK	1532	36
TUBE ASSY-VACCUM	1623	2
TUBE ASSY-VACCUM	1623	3
TUBE ASSY-VACCUM	1623	5
TUBE ASSY-VACCUM	1624	2
TUBE ASSY-VACCUM	1624	3
TUBE ASSY-VACCUM	1624	4
TUBE-DEAERATION RADIATOR	2130	15
TUBE-DEAERATION RADIATOR	2130	15
TUBE-FUEL RETURN	2220	4
TUBE-FUEL SUPPLY	2220	3
TUBE-FUEL VAPOR	2220	26
TUBE-OIL DIPSTICK	1531	30
TUBE-OIL DRAIN	1123	19
TUBE-OIL DRAIN	1124	19
TUBE-SPACER	1542	21
UCC A-COMPLETE	2422	9
UNIT A-BLOWER	6810	4
UNIT A-HEATER	6810	2
UNIT A-SEAT WARMER	7420	37
USE 93684-40082,SCREW	4115	15
VALVE A-EXPANSION	6840	30
VALVE ASSY-EXHAUST	1211	26
VALVE ASSY-OIL FILTER DRAIN	1541	11
VALVE ASSY-OIL FLTR BYPASS	1541	10
VALVE ASSY-PURGE CONTROL	1623	7
VALVE ASSY-PURGE CONTROL	1624	7
VALVE ASSY-REVERSE	1123	17
VALVE ASSY-REVERSE	1124	8
VALVE-BIR EXHAUST	3612	22
VALVE-BOOSTER NONRETURN	4850	5
VALVE-INTAKE	1211	25
VALVE-OIL FILTER BYPASS	1542	4
VALVE-OIL FLTR NONRETURN	1541	4
VENT-AIR	3146	07
VISCO-CLUTCH	1331	22
VISCO-CLUTCH	1332	8
W/LABEL-SUNVISOR SIDE	4611	9
W/STRIP-T/GATE OPEN'G	6410	14
WARMER A-FRONT/BACK	7420	32
WARMER A-FRT/CUSHION	7420	31
WARNING LABEL-SUNVISOR SIDE	7770	6
WASHER	1211	13
WASHER	1453	7
WASHER	1531	15
WASHER	1531	27
WASHER	1531	37
WASHER	1532	17
WASHER	1532	35
WASHER	3166	24
WASHER	3211	10

PART NAME INDEX

PART NANE	GROUP NO.	
WASHER	3212	07
WASHER	3212	07
WASHER	3611	23
WASHER	3612	12
WASHER	3615	08
WASHER	3615	15
WASHER	3615	15
WASHER	3615	18
WASHER	3616	06
WASHER	3616	06
WASHER	3616	07
WASHER	3616	15
WASHER	3750	3
WASHER	4010	17
WASHER	4830	7
WASHER	4841	10
WASHER	4850	3
WASHER MOTOR A-W/SHLD	7820	15
WASHER NYLON	7520	24
WASHER THRUST-DIFF.PINION	4211	6
WASHER THRUST-SIDE GEAR	4211	7
WASHER&TUBE A-BODY MTG #1	5120	5
WASHER&TUBE A-BODY MTG #2	5120	10
WASHER&TUBE A-BODY MTG #3	5120	16
WASHER&TUBE A-BODY MTG #4	5120	20
WASHER-BALL,BRG	3162	38
WASHER-DIFF PINION	4121	17
WASHER-DIFF SIDE THRUST	4121	15
WASHER-FRT UPR ARM INR	4410	3
WASHER-FRT UPR ARM OTR	4410	4
WASHER-LATERAL ROD	4511	18
WASHER-LOCK	3176	2
WASHER-LOCK HUB	4115	12
WASHER-PINION LOCK	3211	21
WASHER-PLAIN	1990	6
WASHER-PLAIN	4310	12
WASHER-PLAIN	4411	21
WASHER-PLAIN BODY MTG	5120	6
WASHER-S/ABS INR	4511	10
WASHER-S/ABS,OTR	4511	9
WASHER-SHK/ABS CTR,S30	4411	32
WASHER-SHK/ABS CTR,S30	4411	33
WASHER-SHK/ABS CTR,S30	4511	41

PART NANE	GROUP NO.	
WASHER-SHK/ABS CTR,S30	4511	42
WASHER-SHK/ABS OTR,S30	4411	6
WASHER-SHK/ABS OTR,S30	4511	7
WASHER-SHK/ABS,CTR,UPR	4411	31
WASHER-SHK/ABS,CTR,UPR	4511	40
WASHER-SHOCK ABSORBER CTR	4420	7
WASHER-SHOCK ABSORBER CTR	4511	8
WASHER-SHOCK ABSORBER OTR	4420	6
WASHER-SHOCK ABSORBER OTR	4513	24
WASHER-SPRING	2610	14
WASHER-SPRING	3030	8
WASHER-SPRING	3310	7
WASHER-SPRING	4211	50
WASHER-SPRING	4310	11
WASHER-SPRING	4410	10
WASHER-SPRING	4411	18
WASHER-SPRING	4511	37
WASHER-SPRING	4613	8
WASHER-SPRING	4810	11
WASHER-THRUST,5TH	3142	33
WASHER-THRUST,5TH	3162	33
WASHER-WAVE	3010	5
WASHER-WAVE	3615	10
WASHER-WAVE	3615	10
WASHER-WAVE	3615	10
WASHER-WAVE	4611	12
WEATHER STRIP A-FRT DR BELT OUTSIDE	7121	11
WEATHER STRIP A-FRT DR DR SIDE OPENC	7121	2
WEATHER STRIP A-REAR DOOR BELT OUTS	7221	11
WEATHER STRIP A-REAR DOOR SIDE OPEN	7221	2
WEATHER STRIP-DR DRIP	7121	3
WEATHER STRIP-FRT DR BELT INSIDE	7115	6
WEATHER STRIP-FRT DR BODY SIDE	7121	1
WEATHER STRIP-REAR DOOR BODY SIDE	7221	1
WEATHER STRIP-REAR DOOR FIXED GLASS	7220	10
WEBBING BUCKLE A-REAR CENTER	7530	9
WEBBING GUIDE-SEAT BELT	7530	12
WHEEL GUARD	7920	3
WHEEL-ABS FRT TOOTH	4115	9
WINCH A-S/TIRE	4180	6
WIR'G A-O2 SENSOR EXTN	8210	
WIR'G A-RAIN SENSING	8210	32
WIRG A-T/GATE	8210	21

PART NANE	GROUP NO.	
WIRING A-A/BAG EXTN	8210	
WIRING A-A/CON(S.A.T.C)	8210	22
WIRING A-A/T EXTN	3740	5
WIRING A-ALT EXTN	8210	
WIRING A-DIAGNOSIS EXTN	8210	
WIRING A-ENG	8210	7
WIRING A-F/SENDER EXTN	8210	3
WIRING A-FLOOR	8210	12
WIRING A-FRT DR	8210	16
WIRING A-FRT DR	8210	17
WIRING A-MAIN	8210	1
WIRING A-ROOF	8210	25
WIRING A-RR DR	8210	18
WIRING A-RR DR	8210	20
WIRING A-SEAT/WARMER	7420	38
WIRING ASSY-ROOM	3614	08
WIRING ASSY-ROOM	3614	08
WIRING ASSY-ROOM	3614	08
WIRING A-T/M	8210	26
WIRING HARNESS-ECU MAIN	1411	4
WIRING HARNESS-ENGINE MAIN	1411	1
WRENCH-WHEEL NUT	9110	5
METER A-COMBINATION	8010	1
T/SCREW-PAN SEMS	8010	12

PART NANE	GROUP NO.

PART NO. INDEX

PART NO. INDEX

PART NO.	GROUP NO.		PART NO.	GROUP NO.		PART NO.	GROUP NO.		PART NO.	GROUP NO.		PART NO.	GROUP NO.		PART NO.	GROUP NO.	
000 140 04 31	1713	8	0000535	7520	17	001 156 90 01	1452	14	007 997 82 92	1350	1	021 997 07 48	1521	16	0574-052011	3612	63
000 150 00 50	1452	15	000137 008202	1453	7	001 542 96 19	1430	10	007603 010101	1221	6	021 997 49 48	1542	25	0574-056062	3612	53
000 151 36 15	1453	12	00033 006175	1430	6	001 990 14 12	1452	8	007603 010101	1521	18	025 545 50 28	1490	3	0574-088020	3612	34
000 152 98 10	1453	10	000443 011001	1123	10	001 990 28 50	1722	10	007603 010103	1211	16	0500-247021	3616	11	0574-099026	3612	46
000 154 06 57	1452	7	000443 011001	1221	24	001 990 29 20	1452	6	007603 012106	1531	27	0500-247022	3616	12	0574-099028	3612	46
000 154 14 40	1452	12	000443 012001	1211	14	001 990 46 05	1722	9	007603 012106	1532	35	0540-012001	3614	03	0574-110031	3616	41
000 154 28 04	1452	12	000443 014001	1124	6	001 990 72 12	1542	16	007603 012110	1211	16	0540-083062	3612	44	0574-122011	3612	50
000 156 71 10	1440	13	000443 014001	1221	24	0011503949	3212	47	007603 012110	1541	13	0540-139005	3612	13	0574-132029	3616	17
000 156 71 10	1441	14	000443 017000	1124	10	002 030 93 34	1130	34	007603 014100	1521	25	0540-139005	3612	17	0574-139018	3616	24
000 156 72 10	1441	14	000443 020004	1123	11	002 030 94 24	1130	34	007603 014100	1522	17	0552-072006	3612	35	0574-156160	3612	40
000 158 75 03	1441	1	000443 020004	1211	14	002 030 95 24	1130	34	007603 014104	1712	7	0555-132017	3616	14	0574-16007	3611	06
000 159 14 38	1440	11	000443 020004	1331	4	002 154 85 06	1452	9	007603 014104	1713	7	0555-139174	3612	16	0574-162009	3616	40
000 159 14 38	1441	12	000443 045002	1521	10	002 154 91 06	1452	9	007603 014110	1542	11	0555-139186	3616	42	0574-162010	3616	40
000 159 38 42	1440	12	000472 018000	1311	19	002 154 92 06	1452	10	007603 018100	1123	8	0555-141054	3612	07	0574-165029	3616	32
000 159 38 42	1441	13	000472 024000	1542	7	002 203 76 75	1522	10	007603 018100	1124	23	0555-143029	3616	19	0574-193101	3616	06
000 180 04 32	1541	10	000908 010002	1211	15	002 997 93 94	1311	1	007603 020100	1311	16	0555-156025	3612	51	0574-193102	3616	07
000 180 05 32	1541	11	000908 010002	1211	15	003 030 31 34	1130	34	007603 022100	1124	21	0555-332222	3614	07	0574-193105	3616	06
000 200 39 22	1331	22	000908 010002	1221	5	003 030 32 24	1130	34	007603 022100	1541	6	0555-334783	3614	11	0574-203005	3612	38
000 201 98 19	1521	2	000908 010002	1221	5	003 030 33 24	1130	34	007603 024105	1331	8	0555-340186	3610	3	0574-203008	3612	38
000 201 98 19	1522	2	000908 024004	1331	7	003 030 87 24	1130	34	007603 027101	1311	12	0555-340187	3610	2	0574-410022	3612	20
000 542 18 81	1430	11	000912 006066	1311	27	003 030 88 24	1130	34	007603 027101	1541	9	0572-507018	3616	33	0574-410045	3611	35
000 542 28 18	1430	9	000912 006097	1311	32	003 030 95 24	1130	34	007604 010102	1521	17	0572-738004	3614	06	0574-504008	3612	38
000 987 11 45	1623	6	000912 006097	1842	2	003 030 96 24	1130	34	007604 018100	1331	3	0574-014044	3611	50	0574-508046	3611	32
000 987 11 45	1624	5	000912 008009	1113	6	003 159 67 03	1440	15	007985 004151	1452	11	0574-037017	3612	19	0574-508047	3611	33
000 987 37 45	1624	6	000912 008060	1522	22	003 159 67 03	1441	16	011 997 19 92	1350	1	0574-037018	3612	19	0574-508052	3611	32
000 990 22 50	1452	3	000912 010078	1332	9	003 205 04 06	1331	23	011 997 24 48	1522	18	0574-037019	3612	19	0574-508062	3611	32
000 990 25 52	1722	2	000931 006225	1221	10	003 997 73 94	1531	18	011 997 37 48	1522	6	0574-037020	3612	19	0574-511006	3611	30
000 990 25 52	1723	3	000931 006226	1221	10	003 997 73 94	1532	18	012 997 51 48	1522	25	0574-037021	3612	19	0574-511007	3611	30
000 990 76 30	1453	11	000933 006175	1522	28	004 997 51 90	1542	18	015 997 23 48	1521	12	0574-037022	3612	19	0574-511012	3611	30
000 990 94 05	1453	9	000933 006175	1542	26	00536	7520	19	015 997 23 48	1522	9	0574-037023	3612	19	0574-511046	3611	30
000 991 90 22	1842	13	000933 006175	1843	2	006 990 34 01	1453	13	017 997 16 48	1532	37	0574-037024	3612	19	0574-511047	3611	30
000 995 81 44	1411	5	000933 006207	1522	31	006 990 35 01	1452	13	017 997 21 48	1221	8	0574-037026	3612	19	0574-539051	3611	35
000 997 14 98	1531	17	000933 008040	1531	16	006 990 55 01	1452	8	017 997 21 48	1311	22	0574-039005	3612	30	0574-539058	3611	35
000 997 14 98	1532	15	000933 008040	1532	16	006 997 75 48	1123	5	017 997 22 48	1123	18	0574-043090	3612	37	0574-539069	3611	35
000 997 21 98	1311	2	000933 008116	1712	9	006 997 75 48	1124	7	017 997 22 48	1124	9	0574-043091	3612	39	0574-557107	3616	26
00000 00627	4830	12	000933 008214	1112	6	006799 005009	1842	5	017 997 23 48	1522	21	0574-043092	3612	61	0574-557114	3616	25
00000 006AR	4841	18	000933 008214	1842	10	006799 005009	1843	5	017 997 23 48	1522	27	0574-044086	3612	10	0574-565019	3612	20
0000000353	3212	28	000934 005004	1842	12	007 981 02 25	1452	5	017 997 31 48	1541	2	0574-045068	3612	01	0574-566005	3612	60
000007 008103	1311	8	000934 005010	1842	12	007 981 25 25	1452	5	017 997 31 48	1542	3	0574-045069	3612	02	0574-566006	3612	60
000007 008203	1211	4	000934 008045	1453	6	007 981 73 25	1452	4	017 997 82 48	1542	24	0574-045080	3612	02	0574-598069	3612	48
0000534	7520	17	001 152 27 10	1453	10	007 981 89 25	1452	4	019 997 75 48	1331	6	0574-050026	3615	08	0574-624028	3611	42

PART NO. INDEX

PART NO.	GROUP NO.		PART NO.	GROUP NO.		PART NO.	GROUP NO.		PART NO.	GROUP NO.		PART NO.	GROUP NO.		PART NO.	GROUP NO.	
0574-625017	3616	27	0585-050016	3615	15	0585-141027	3616	03	0585-193066	3615	16	0593-045056	3611	02	061030 054056	1130	23
0574-625018	3611	40	0585-050023	3615	15	0585-141028	3612	05	0585-193071	3611	23	0593-045064	3612	01	09110 32001	9110	1
0574-625024	3616	27	0585-050025	3615	10	0585-141029	3611	05	0585-193072	3615	18	0593-050025	3615	10	09121 01002	9110	5
0574-625025	3616	27	0585-053020	3616	21	0585-141032	3612	04	0585-193076	3615	19	0593-052010	3612	63	09141 01000	9110	6
0574-625031	3611	40	0585-056040	3613	09	0585-141036	3615	03	0585-193078	3612	12	0593-056046	3612	55	09151 11000	9110	8
0574-625038	3616	27	0585-062016	3615	09	0585-141037	3613	02	0585-193080	3615	21	0593-056059	3614	05	09152 11000	9110	8
0574-640082	3614	08	0585-090022	3611	46	0585-141039	3613	03	0585-237069	3612	22	0593-062018	3615	09	09180 05001	9110	4
0574-640084	3614	08	0585-090024	3615	31	0585-156091	3615	27	0585-427001	3616	08	0593-090029	3615	32	1000.012.002	3212	13
0574-659013	3616	35	0585-090025	3615	29	0585-156092	3615	27	0585-427002	3611	17	0593-090034	3612	59	1000.043.017	3211	03
0574-665033	3616	31	0585-090026	3615	32	0585-156092	3616	29	0585-427004	3611	19	0593-107004	3611	48	1000.044.012	3212	08
0574-671011	3616	39	0585-090029	3615	32	0585-156104	3612	42	0585-427006	3611	20	0593-107004	3613	12	1000.044.052	3212	31
0574-671012	3616	39	0585-098057	3612	36	0585-156107	3612	32	0585-427007	3611	21	0593-124029	3616	28	1000.047.016	3212	07
0574-671021	3616	39	0585-098063	3612	41	0585-156116	3612	26	0585-427008	3616	09	0593-124030	3615	26	1000.130.008	3212	04
0574-689019	3611	41	0585-103061	3615	25	0585-156125	3612	24	0585-427009	3616	10	0593-124031	3615	24	1000.130.008	3212	19
0574-690011	3612	45	0585-107002	3616	37	0585-156129	3612	21	0585-427010B	3616	11	0593-124039	3616	28	1000.130.011	3211	09
0574-712001	3611	31	0585-109004	3613	14	0585-166007	3611	14	0585-427011	3616	12	0593-141044	3614	09	1000.132.039	3212	52
0574-712002	3611	31	0585-124011	3612	27	0585-166007	3615	05	0585-427012	3616	13	0593-141045	3612	08	1000.139.038	3212	56
0574-736070	3613	01	0585-124023	3612	31	0585-166008	3611	15	0585-427013	3616	14	0593-156147	3612	28	1000.139.039	3211	07
0574-736090	3613	01	0585-132013	3616	20	0585-166008	3615	06	0585-427014	3616	10	0593-183175	3612	33	1000.139.040	3211	08
058-132011	3615	17	0585-132022	3611	22	0585-166010	3615	14	0585-557072	3616	25	0593-183175	3612	62	1000.139.041	3211	39
058-132011	3615	20	0585-139005	3611	24	0585-166026	3615	04	0585-640029	3613	06	0593-190033	3612	54	1000.139.043	3211	11
058-183132	3613	15	0585-139005	3615	22	0585-166030	3615	11	0585-656006	3613	17	0593-190035	3612	57	1000.141.014	3212	45
0583-107004	3611	48	0585-139007	3616	16	0585-166035	3615	13	0585-666007	3611	16	0593-427016	3611	18	102 011 04 11	1123	2
0585-013004	3614	01	0585-139008	3612	15	0585-166035A	3615	13	0585-666007	3615	07	0593-427019	3612	11	102 011 04 11	1124	2
0585-016004	3611	11	0585-139009	3612	14	0585-166036	3615	13	0585-666010	3615	14	0593-506012	3615	30	102 014 00 33	1532	29
0585-016011	3616	04	0585-139014	3616	23	0585-166037	3615	12	0585-683011	3614	02	0593-506013	3616	38	102 016 03 76	1211	13
0585-016013	3611	13	0585-139016	3616	22	0585-183124	3611	36	0591-039001	3612	29	0593-507020	3616	33	102 031 01 33	1130	22
0585-016014	3611	12	0585-139017	3611	25	0585-183125	3611	37	0591-156146	3611	43	0593-508061	3611	33	102 032 05 05	1130	14
0585-016015	3616	05	0585-139017	3615	23	0585-183131	3616	34	0591-183159	3611	38	0593-598064	3612	48	102 053 02 26	1211	34
0585-018013	3616	36	0585-141008	3611	04	0585-183132	3612	47	0591-183160	3613	10	0593-624030	3611	42	102 053 02 26	1211	34
0585-037001	3611	39	0585-141010	3612	06	0585-183135	3611	34	0591-238007	3613	04	0593-640072	3612	18	102 159 04 18	1441	11
0585-037002	3611	39	0585-141015	3616	02	0585-183137	3611	47	0591-624022	3611	42	0593-640076	3611	26	102 159 26 40	1532	33
0585-037003	3611	39	0585-141017	3614	10	0585-183141	3611	27	0591-640055	3611	29	0593-640076	3613	05	102 184 00 31	1542	6
0585-040027	3615	28	0585-141018	3611	07	0585-183141	3611	49	0591-689018	3611	45	0593-640078	3613	07	102 991 04 40	1542	21
0585-040028	3611	44	0585-141018	3615	01	0585-183141	3613	08	0593-039002	3612	30	0593-640084	3614	08	102 993 07 01	1542	5
0585-040029	3616	30	0585-141019	3611	03	0585-183152	3613	11	0593-040040	3612	25	0593-640105	3612	18	102 994 01 35	1130	35
0585-040034	3613	16	0585-141020	3611	08	0585-183153	3613	13	0593-043093	3611	28	0595-132027	3616	18	102 994 01 35	1130	35
0585-043074	3612	43	0585-141021	3615	02	0585-190022	3612	23	0593-044080	3612	09	0595-193081	3616	15	103 011 02 52	1430	4
0585-043078	3612	52	0585-141021	3616	01	0585-190027	3612	56	0593-044084	3611	10	061030 054054	1130	23	103 052 01 93	1311	13
0585-045045	3614	04	0585-141022	3612	03	0585-190028	3612	58	0593-044085	3612	10	061030 054054	1130	23	103 200 06 23	1332	6
0585-050012	3615	10	0585-141025	3611	09	0585-190138	3612	49	0593-045055	3611	01	061030 054056	1130	23	103 201 00 07	1521	4

PART NO. INDEX

PART NO.	GROUP NO.		PART NO.	GROUP NO.		PART NO.	GROUP NO.		PART NO.	GROUP NO.		PART NO.	GROUP NO.		PART NO.	GROUP NO.	
103 201 00 07	1522	4	104 141 11 80	1713	9	111 038 02 50	1130	26	111 155 01 35	1453	1	119 153 16 52	1311	24	1350.193.001	3211	10
103 201 01 01	1522	5	104 142 00 72	1723	4	111 038 10 10	1130	32	111 155 04 15	1452	2	119 153 17 52	1311	24	1350.193.002	3211	10
103 201 01 39	1522	3	104 150 06 73	1430	5	111 038 10 10	1130	32	111 159 01 18	1440	10	119 153 18 52	1311	24	1350.193.002	3211	21
103 997 00 72	1124	20	104 155 01 15	1452	2	111 038 11 10	1130	32	111 159 01 18	1441	11	119 153 19 52	1311	24	1350.193.003	3212	55
104 010 12 31	1221	2	104 159 04 25	1441	7	111 038 11 10	1130	32	111 159 09 40	1440	14	119 153 20 52	1311	24	1354.039.002	3212	20
104 010 14 08	1124	24	104 159 26 40	1441	15	111 038 12 10	1130	32	111 180 00 08	1531	12	120 050 01 11	1311	11	1354.089.001	3211	26
104 010 21 30	1221	19	104 159 27 40	1522	13	111 038 12 10	1130	32	111 180 00 71	1531	19	120 052 04 01	1311	21	1354.089.002	3211	27
104 010 32 20	1211	24	104 180 04 09	1542	14	111 038 13 10	1130	32	111 180 02 07	1531	11	120 141 12 40	1623	8	1354.096.003	3212	14
104 014 02 66	1532	22	104 180 04 32	1123	17	111 038 13 10	1130	32	111 184 00 32	1541	4	120 141 12 40	1624	8	1354.099.002	3212	26
104 016 03 38	1441	6	104 180 04 32	1124	8	111 050 03 11	1311	11	111 200 00 70	1331	19	120 142 00 72	1722	4	1354.122.002	3212	24
104 050 01 66	1311	17	104 181 02 59	1532	19	111 050 11 16	1311	9	111 200 02 14	1331	14	120 990 02 04	1311	20	1354.144.002	3211	35
104 050 12 25	1211	35	104 186 00 95	1532	24	111 051 00 43	1311	29	111 200 07 70	1331	16	120 990 02 21	1211	7	1354.144.003	3212	54
104 050 12 25	1211	35	104 187 00 36	1124	11	111 051 04 03	1211	6	111 201 00 39	1521	3	120 990 02 21	1211	7	1354.171.004	3212	53
104 051 02 72	1311	28	104 200 20 28	1332	17	111 051 05 03	1211	6	111 202 01 22	1331	21	123 584 93 21	1441	9	1354.171.010	3211	29
104 051 36 03	1211	6	104 203 00 38	1522	34	111 051 06 03	1211	6	111 203 02 82	1521	13	1300.031.006	3212	09	1354.212.001	3211	40
104 051 44 03	1211	6	104 203 04 31	1522	20	111 051 07 03	1211	6	111 990 01 12	1541	8	1300.044.001	3211	04	1354.565.002	3212	01
104 051 45 03	1211	6	104 203 04 82	1522	23	111 051 08 03	1211	6	111 990 03 12	1130	17	1300.044.001	3212	40	1354.596.001	3212	12
104 051 46 03	1211	6	104 990 10 04	1311	30	111 051 09 03	1211	6	111 990 04 05	1211	9	1300.052.003	3212	41	1354.659.001	3211	15
104 051 47 03	1211	6	104 993 00 20	1531	20	111 052 02 83	1311	3	111 990 04 05	1211	9	1300.052.007	3212	41	1354.659.002	3211	25
104 051 48 03	1211	6	104 993 00 20	1532	20	111 053 00 20	1211	32	111 990 04 78	1211	8	1300.127.002	3212	39	1354.671.006	3211	28
104 051 49 03	1211	6	104 993 06 01	1311	14	111 053 00 20	1211	32	111 990 14 01	1541	7	1300.131.001	3211	23	1354.671.010	3211	28
104 051 50 03	1211	6	104 997 00 48	1311	34	111 053 06 25	1211	31	111 990 17 01	1712	3	1300.149.002	3212	21	1354.672.001	3211	02
104 051 51 03	1211	6	104 997 00 48	1430	2	111 053 06 25	1211	31	111 990 22 04	1722	6	1300-044015	3612	10	1354.689.001	3211	16
104 052 05 83	1311	3	104 997 01 48	1311	26	111 053 10 29	1211	29	111 990 22 04	1723	11	1345.056.005	3211	33	1356.235.001	3212	11
104 052 07 74	1311	7	10405 30232	1211	28	111 053 10 29	1211	29	111 993 05 20	1842	7	1345.127.002	3211	19	161 010 32 20	1211	1
104 052 14 16	1311	9	110 200 05 15	1522	11	111 053 11 29	1211	29	111 993 17 10	1842	8	1345.238.001	3211	32	161 010 33 30	1221	1
104 053 0531	1211	27	110 993 17 10	1843	7	111 053 11 29	1211	29	111 993 32 01	1541	5	1350.014.001	3211	12	161 010 34 08	1123	1
104 053 01 32	1211	28	111 010 00 73	1440	6	111 053 12 29	1211	29	111 995 03 01	1531	33	1350.034.002	3211	34	161 010 38 13	1531	24
104 053 01 32	1211	28	111 010 02 82	1123	23	111 053 12 29	1211	29	111 997 02 10	1311	8	1350.042.001	3211	20	161 010 38 72	1531	31
104 053 02 32	1211	28	111 010 31 08	1123	20	111 070 06 75	1842	11	111 997 05 10	1531	21	1350.053.001	3211	24	161 010 81 00	1112	1
104 053 05 31	1211	27	111 010 41 20	1211	24	111 070 17 24	1842	1	116 180 02 08	1532	11	1350.053.002	3212	27	161 014 30 66	1531	22
104 053 06 31	1211	27	111 016 09 06	1221	2	111 070 34 21	1842	3	116 276 09 29	1623	4	1350.100.001	3212	23	161 014 32 77	1123	19
104 053 06 31	1211	27	111 016 28 20	1211	22	111 070 45 21	1842	6	117 078 09 81	1490	2	1350.110.002	3212	30	161 015 31 01	1331	1
104 070 11 22	1843	8	111 017 00 12	1211	20	111 072 00 30	1712	4	117 990 02 78	1713	5	1350.110.003	3212	30	161 016 31 21	1221	16
104 070 18 24	1843	1	111 018 00 40	1123	24	111 072 00 93	1842	4	117 997 02 30	1124	5	1350.143.001	3212	57	161 016 33 21	1221	17
104 070 22 21	1843	3	111 018 00 71	1440	7	111 072 00 93	1843	4	119 153 11 52	1311	24	1350.156.007	3211	37	161 018 31 02	1221	13
104 070 23 21	1843	9	111 018 00 71	1712	5	111 094 00 82	1123	22	119 153 12 52	1311	24	1350.156.008	3212	25	161 018 34 16	1531	30
104 070 27 21	1843	6	111 018 02 70	1123	21	111 094 03 91	1221	11	119 153 13 52	1311	24	1350.156.008	3212	25	161 030 31 03	1130	12
104 140 41 01	1713	3	111 018 02 70	1331	5	111 140 21 34	1722	5	119 153 14 52	1311	24	1350.162.001	3212	02	161 030 32 05	1130	13
104 140 44 01	1713	1	111 018 10 82	1221	20	111 141 02 87	1440	8	119 153 15 52	1311	24	1350.163.001	3211	22	161 030 35 12	1130	18
104 141 07 80	1221	14	111 038 02 50	1130	26	111 142 02 40	1722	8	119 153 16 52	1311	24	1350.165.001	3211	13	161 030 35 20	1130	25

PART NO. INDEX

PART NO.	GROUP NO.		PART NO.	GROUP NO.		PART NO.	GROUP NO.		PART NO.	GROUP NO.		PART NO.	GROUP NO.		PART NO.	GROUP NO.	
161 030 36 17	1130	33	161 180 38 01	1531	1	162 016 30 64	1221	12	162 184 30 08	1541	1	1900.089.001	3211	38	21437 05321	2130	19
161 030 43 12	1130	18	161 180 41 52	1531	35	162 016 31 21	1221	17	162 184 30 08	1542	2	1900.110.015	3212	30	21437 05321	2130	19
161 031 30 01	1130	1	161 181 30 12	1532	14	162 016 34 20	1211	23	162 184 30 95	1542	15	1900.139.040	3212	32	21441 11450	2130	24
161 032 30 76	1130	19	161 186 32 95	1531	39	162 016 35 80	1221	15	162 186 32 01	1532	5	1900.139.063	3212	05	21441 11450	2130	26
161 032 31 76	1130	19	161 200 32 15	1521	9	162 016 36 80	1221	18	162 200 30 70	1332	21	1900.139.063	3212	18	21441 11450	2130	24
161 038 30 71	1130	27	161 200 37 01	1521	1	162 016 37 80	1221	16	162 200 32 22	1332	8	1900.149.001	3212	06	21441 11450	2130	26
161 038 30 71	1130	27	161 201 32 80	1521	5	162 030 31 03	1130	12	162 200 32 70	1332	19	1900.149.014	3212	06	21441 11500	2130	25
161 050 30 47	1311	18	161 202 31 10	1521	7	162 030 32 20	1130	25	162 200 33 52	1522	29	1900.183.002	3212	50	21441 11500	2130	25
161 050 31 16	1311	4	665 200 30 70	1331	9	162 030 41 17	1130	33	162 200 34 52	1542	20	1900.183.010	3211	06	21450 05040	2130	16
161 050 31 27	1211	26	161 202 31 40	1331	12	162 031 30 01	1130	1	162 200 49 01	1522	1	1900.183.010	3212	29	21450 05040	2130	16
161 050 31 27	1211	26	161 202 31 40	1332	15	162 032 30 06	1130	15	162 202 30 10	1522	32	1900.183.012	3212	47	21605 05051	2130	8
161 050 33 01	1221	22	161 203 37 75	1521	11	162 050 30 16	1311	4	162 203 30 39	1542	23	1900.185.003	3212	46	21615 08050	2130	9
161 050 36 01	1221	21	161 220 31 41	1112	4	162 050 30 47	1311	18	162 203 32 74	1522	12	20550 05002	2010	21	21641 05002	2130	10
161 052 30 16	1311	5	161 223 35 04	1112	2	162 050 31 16	1311	5	162 203 32 82	1522	30	20550 11000	2010	22	21650 05061	2120	6
161 053 31 58	1211	30	161 223 35 04	1113	2	162 050 32 01	1221	22	162 205 31 10	1332	10	20911 05112	1990	1	21651 05051	2120	6
161 053 31 58	1211	30	161 223 36 41	1112	5	162 050 33 01	1221	21	162 220 33 41	1113	5	20911 05131	1990	1	21652 05060	2120	7
161 053 32 01	1211	25	161 223 43 04	1112	2	162 051 31 77	1311	31	162 223 32 41	1113	4	20920 05002	1990	2	21655 05060	2120	8
161 053 32 01	1211	25	161 223 43 04	1113	2	162 052 30 03	1130	4	162 440 30 41	1430	8	20921 05000	1990	3	22110 05604	2210	1
161 070 31 76	1842	9	161 440 63 33	1411	4	162 052 30 83	1311	6	162 440 53 33	1411	1	20951 05100	1990	4	22160 05051	2210	24
161 070 34 38	1623	5	161 440 80 33	1411	1	162 070 33 38	1624	2	162 440 55 33	1411	4	21310 05134	2111	1	22183 05050	2220	7
161 070 35 38	1623	3	161 540 35 17	1722	7	162 070 34 38	1624	3	162 460 34 80	4641	13	21310 05181	2111	1	22312 05200	2210	2
161 070 36 38	1623	2	161 542 31 17	1522	16	162 070 49 38	1624	1	162 540 30 45	1430	13	21310 05191	2111	1	22410 05040	2220	8
161 070 49 38	1623	1	161 545 30 40	1430	12	162 070 55 38	1624	4	162 540 37 17	1723	8	21330 05000	2111	2	22510 05060	2220	12
161 140 32 09	1722	1	161 990 30 53	1331	20	162 141 30 83	1713	4	162 540 38 17	1723	8	21361 05000	2111	3	22610 05033	2210	8
161 140 50 01	1712	1	161 990 30 53	1332	22	162 141 32 40	1624	9	162 988 30 27	1411	2	21361 05010	2111	4	22610 06010	2210	13
161 141 30 80	1712	2	161 990 31 01	1521	20	162 142 30 20	1723	9	162 988 31 27	1411	3	21411 05030	2130	1	22670 05031	2210	14
161 141 32 40	1623	9	161 990 31 10	1211	12	162 142 31 20	1723	10	162 988 31 27	1411	3	21411 05040	2130	1	22690 08000	2210	17
161 141 35 60	1623	7	161 990 31 40	1531	37	162 142 32 80	1723	7	162 990 32 12	1211	12	21421 05030	2130	2	22710 05040	2220	3
161 141 35 60	1624	7	161 990 33 01	1130	8	162 142 45 01	1723	2	162 992 32 20	1221	11	21422 05030	2130	5	22718 05040	2220	4
161 142 30 80	1722	3	161 990 37 78	1211	17	162 142 46 01	1723	1	163 038 01 10	1130	30	21423 05030	2130	6	22727 05041	2220	26
161 150 30 18	1441	10	1611813020	1531	2	162 150 40 75	1441	4	163 038 01 10	1130	30	21423 05040	2130	6	22732 05050	2220	27
161 150 31 18	1440	9	162 010 30 20	1211	2	162 153 30 28	1430	1	163 038 01 11	1130	31	21424 05000	2130	3	22733 05052	2220	28
161 150 31 18	1441	10	162 010 32 13	1532	26	162 154 34 02	1452	1	163 038 01 11	1130	31	21425 05040	2130	4	22736 05052	2220	29
161 150 31 75	1440	5	162 010 33 30	1221	1	162 155 30 35	1453	1	1900.043.004	3211	30	21431 05031	2130	7	22737 05061	2220	6
161 153 32 28	1311	25	162 010 33 66	1532	36	162 158 31 85	1441	3	1900.043.008	3212	33	21431 05041	2130	7	22738 05061	2220	5
161 153 36 28	1712	8	162 010 33 72	1532	38	162 159 30 46	1441	8	1900.044.009	3212	03	21432 05001	2130	12	22741 05040	2220	33
161 154 39 02	1452	1	162 010 35 08	1124	1	162 180 30 07	1532	10	1900.044.009	3212	31	21436 05003	2130	15	22742 05040	2220	34
161 158 30 85	1440	4	162 014 30 77	1124	19	162 184 30 25	1541	3	1900.047.007	3212	07	21436 05003	2130	15	22759 05041	2220	1
161 158 31 03	1440	1	162 015 30 02	1332	1	162 184 30 25	1542	9	1900.053.002	3212	10	21436 05011	2130	15	22761 05040	2220	2
161 159 31 42	1440	3	162 015 30 20	1221	7	162 180 30 10	1542	1	1900.056.004	3212	51	21437 05030	2130	18	23115 05030	2312	15
161 159 31 42	1441	2	162 016 00 33	1211	21	162 180 31 01	1532	1	1900.072.005	3211	05	21437 05030	2130	18	23115 05040	2312	4

PART NO. INDEX

PART NO.	GROUP NO.		PART NO.	GROUP NO.		PART NO.	GROUP NO.		PART NO.	GROUP NO.		PART NO.	GROUP NO.		PART NO.	GROUP NO.	
23116 05030	2312	21	26940 05402	2610	11	36751 05904	3740	8	40350 05100	4010	24	41310 05200	4110	8	41735 03011	4170	1
23125 05030	2312	13	26940 05712	2610	11	36751 05913	3740	8	40371 05301	4010	25	41310 05210	4110	8	41770 06123	4170	4
23125 05040	2312	13	26950 05102	2610	12	36752 05903	3740	9	40420 05002	4010	28	41310 05220	4110	8	41780 06123	4170	5
23126 05031	2312	3	26960 05100	2610	13	36790 09000	3740	7	40430 05000	4010	30	41310 05230	4110	8	42020 05000	4211	55
23160 05030	2312	6	26970 05001	2610	8	36810 05230	3750	12	40440 05001	4010	31	41320 05000	4110	9	42099 050A0	4841	17
23160 05040	2312	17	26971 05300	2610	9	36810 05240	3750	12	40450 05000	4010	33	41331 05000	4110	11	4400.055.001	3211	36
23550 05034	2312	14	30400 05901	3030	1	36813 05100	3750	2	40460 05000	4010	26	41332 05000	4110	12	4400.156.001	3212	22
23552 05034	2312	30	30410 05000	3030	3	36814 05000	3750	3	40470 05000	4010	27	41333 05000	4110	13	4400.508.001	3211	31
23555 05030	2312	31	30415 05001	3030	8	36820 05131	3750	4	40480 05001	4010	32	41334 05000	4110	14	4400.543.001	3212	15
24220 06640	2421	8	30420 06000	3030	2	36820 05141	3750	4	40490 05002	4010	29	41335 05000	4110	15	4400.645.021	3212	17
24221 05120	2421	10	30432 05000	3030	5	36830 05000	3750	5	40540 05400	4010	34	41374 01800	4110	10	4408.140.001	3212	48
24230 05630	2422	8	30433 05010	3030	14	36850 05000	3750	6	40551 05301	4010	35	413ST05401	4110	18	4408.140.002	3212	49
24245 05631	2421	4	30434 05001	3030	9	36860 05130	3750	8	40560 05002	4010	36	413ST05411	4110	19	4408.150.001	3212	34
24245 05631	2422	4	30460 05001	3030	12	36860 05140	3750	9	40570 05002	4010	37	41410 05106	4115	1	4408.539.001	3212	16
24249 05032	2421	16	30460 05001	4810	9	36870 05130	3750	10	40607 05101	4010	38	41420 05002	4115	2	4408.640.001	3212	44
24249 05032	2422	16	30510 05003	3020	1	36880 05140	3750	11	40608 05101	4010	39	41421 05000	4115	3	4408.648.001	3212	42
24261 05400	2421	15	30520 05900	3020	2	36890 05120	3750	7	40630 05000	4010	40	41423 08100	4115	4	4408.648.002	3212	42
24261 05400	2421	23	30530 05121	3020	5	40000 05309	4010	1	40636 05001	4411	16	41425 08000	4115	5	4408.648.003	3212	42
24261 05400	2422	15	30540 05012	3020	7	40010 05001	4010	2	40640 05000	4010	41	41431 03210	4115	6	4408.648.004	3212	42
24261 05400	2422	23	308734 008002	1311	23	40020 05001	4010	3	40650 05001	4010	42	41432 03210	4115	7	4408.648.005	3212	42
24310 05630	2422	9	308734 008003	1332	5	40111 05100	4010	5	40660 05100	4010	43	41441 06212	4115	8	4408.648.006	3212	42
24320 05120	2421	9	31730 06100	3710	3	40120 05100	4010	6	40670 05100	4010	44	41451 05000	4115	10	44210 05010	4411	1
24341 05130	2422	10	31730 06200	3710	3	40130 05301	4010	7	40680 05100	4010	44	41461 05000	4115	10	44301 05210	4411	3
24430 05451	2421	11	31750 05A00	3710	2	40132 05300	4010	8	40701 05100	4010	45	41510 05102	4116	1	44311 01001	4511	36
24430 05531	2422	11	31760 05A90	3710	4	40140 05002	4010	9	40702 05100	4010	45	41511 05101	4116	22	44311 05100	4411	5
24475 07440	2421	18	31830 08000	3176	1	40142 05300	4010	10	40711 05000	4010	46	41531 08000	4115	11	44311 05100	4511	6
24475 07440	2422	18	31831 08000	3176	3	40150 05301	4010	11	40720 05302	4010	47	41532 05000	4115	12	44312 05000	4420	6
24475 07450	2421	17	31832 08000	3176	4	40160 05051	4010	12	40730 05302	4010	48	41601 08000	4310	2	44312 05000	4514	24
24475 07450	2422	17	31833 08000	3176	2	40170 05006	4010	13	40740 05010	4010	49	41603 08000	4310	3	44312 05100	4411	6
24481 05032	2421	21	31834 08000	3176	6	40210 05101	4010	14	40740 05020	4010	49	41605 08000	4310	5	44312 05100	4511	7
24481 05032	2422	21	31835 08000	3176	5	40220 05101	4010	15	40760 05300	4010	50	41612 05000	4310	4	44312 05110	4411	33
24482 05631	2421	20	31930 05000	3710	10	40241 05001	4010	17	40821 05000	9110	3	41620 05002	4310	7	44312 05110	4511	42
24482 05631	2422	20	31932 05010	3710	9	40242 05001	4010	18	40828 01000	4010	51	41620 05102	4310	7	44313 05000	4420	7
24630 05432	2422	12	31932 05020	3710	9	40270 05000	4010	19	40830 32000	4180	4	41640 08000	4310	6	44313 05000	4511	8
24630 05442	2421	12	3203 0060 00	3212	34	40280 05000	4010	20	40830 32000	9110	2	41650 05000	4310	8	44313 05100	4411	32
24641 05110	2421	13	33102 05001	3310	2	403 997 06 20	1211	19	40840 08000	4180	6	41712 08210	4170	3	44313 05100	4511	41
24641 05110	2422	13	33102 05100	3310	5	403 997 06 20	1211	19	40855 05051	4180	7	41712 08220	4170	3	44313 05200	4411	31
26802 05113	2610	1	33110 05101	3310	3	403 997 11 72	1713	6	40856 05051	4180	7	41712 08240	4170	3	44313 05200	4511	40
26850 05000	2610	3	36711 05900	3740	2	40310 05001	4010	21	41070 08000	4310	1	41730 06530	4170	2	44401 05001	4410	1
26860 05300	2610	4	36730 05A00	3740	4	40330 05001	4010	22	41300 05101	4110	7	41730 06540	4170	2	44402 05001	4410	1
26910 05002	2610	6	36730 05A10	3740	4	40345 05000	4010	23	41310 05100	4110	8	41730 06620	4170	2	44430 03011	4410	6

PART NO. INDEX

PART NO.	GROUP NO.		PART NO.	GROUP NO.		PART NO.	GROUP NO.		PART NO.	GROUP NO.		PART NO.	GROUP NO.		PART NO.	GROUP NO.	
44451 05000	4410	2	45502 05302	4511	13	48110 050A0	4830	1	48660 05112	4821	8	51355 05000	5730	3	52286 05001	5230	2
44452 05000	4410	3	45551 05000	4511	14	48130 05012	4830	3	48691 05000	3020	19	51360 05001	5730	4	52301 05102	5240	1
44453 05000	4410	4	45601 05000	4511	15	48140 05013	4830	1	48691 05000	4821	11	51370 05101	5730	5	52302 05102	5240	1
44471 05161	4410	7	45621 05000	4511	16	48140 050A0	4830	1	48694 05000	4821	14	51373 05000	5730	6	52311 05101	5240	2
44472 05321	4410	7	45631 05000	4511	17	48170 05001	4830	4	48695 06300	4821	15	51383 05000	5730	6	52312 05100	5240	3
44473 05040	4410	8	45632 05000	4511	18	48180 05000	4821	18	48698 05000	4821	16	51501 05204	5730	27	52321 05101	5240	2
44473 05080	4410	8	45710 05002	4511	19	48180 05000	4841	5	48710 05020	4821	19	51551 05000	5230	10	52322 05100	5240	3
44473 05160	4410	8	45712 05000	4511	20	481KT 05000	4830	9	48716 03000	3020	28	51561 05000	5230	10	52330 05100	5240	4
44481 03000	4411	2	46101 06550	4611	2	48310 05100	4211	52	48716 03000	4821	20	51811 05224	5720	1	52340 05100	5240	4
44490 05001	4410	5	46103 06500	4611	13	48310 05202	4841	12	48716 03000	4830	6	51811 05602	5720	1	52371 05000	5210	22
44501 05005	4411	8	46141 06500	4611	10	48340 05100	4211	52	48716 03000	4841	6	51821 05224	5720	1	52376 05100	5210	23
44502 05005	4411	8	46142 06500	4611	10	48340 05202	4841	12	48720 05020	4821	21	51821 05602	5720	1	52381 05000	5210	22
44505 05001	4411	10	46172 06500	4611	9	483KT 05000	4841	15	48730 05120	4821	22	51891 05000	5720	13	52386 05100	5210	23
44550 05001	4411	9	46172 06500	7770	6	483KT 05010	4841	16	48735 03002	3020	15	51931 05000	5730	7	52430 05001	5210	24
44592 05000	4411	11	46210 05501	4613	2	48401 05102	4841	1	48735 03002	4821	24	51933 05003	5730	8	52440 05101	5210	24
44652 03000	4420	20	46310 06301	4613	3	4840G	3211	18	48740 05120	4821	23	51941 05000	5730	7	52510 05104	5210	1
44654 03001	4420	12	46311 05000	4613	7	48410 08001	4841	2	48751 05000	4821	25	51943 05002	5730	8	52513 05003	5210	3
44655 03000	4420	13	46500 05756	4620	2	48413 05051	4841	3	48752 05000	4821	25	52101 05037	5230	1	52514 05000	5210	4
44656 03001	4420	14	46510 05000	4620	5	48440 08001	4841	2	48800 05010	4810	1	52102 05037	5230	1	52520 05103	5210	1
44711 05101	4420	1	46510 05755	4620	1	48471 05000	4841	4	48800 05110	4810	1	52107 05104	5210	21	52523 05003	5210	3
44725 05000	4511	21	46511 05001	4620	6	48481 05000	4841	4	48800 05110	4810	1	52108 05104	5210	21	52524 05000	5210	4
44730 05100	4420	5	46515 05001	4620	7	48491 05000	4841	7	48866 03000	3030	4	52111 05001	5230	3	52527 05000	5210	5
44730 05100	4512	22	46516 05000	4620	4	484KT 05000	4841	9	48866 03000	4810	2	52113 05001	5230	4	52528 05000	5210	6
44750 0500	4513	23	465KT 05000	4620	10	48500 05700	4850	1	48871 08000	4810	3	52115 05000	5230	7	52531 05000	5210	7
44750 05001	4420	4	46660 05510	4620	3	48503 05000	4850	4	48872 05000	4810	10	52121 05001	5230	3	52533 05001	5210	2
44811 05100	4420	8	466KT 05000	4620	11	48504 05000	4850	3	48873 05100	4810	4	52123 05001	5230	4	52536 05010	5210	8
44821 05100	4420	8	47830 05012	4641	2	48505 05000	4850	2	48890 05002	4810	7	52125 05000	5230	7	52541 05000	5210	7
44831 05002	4420	9	47830 05042	4641	2	48510 05500	4850	6	48910 08000	4891		52131 05002	5230	5	52543 05001	5210	2
44850 05002	4420	11	47840 05520	4641	1	48520 05010	4850	8	48920 05100	4890	1	52137 05000	5230	13	52546 05001	5210	8
44891 05000	4420	15	47840 05530	4641	1	48540 05700	4850	7	48930 05100	4890	2	52141 05002	5230	5	52550 05101	5210	9
44892 05001	4420	16	47850 05201	4641	5	48580 05200	4850	9	48941 05000	4115	9	52147 05000	5230	13	52551 05101	5210	10
45110 05101	4511	1	47860 06000	4641	6	48580 05620	4850	9	49010 05121	4910	1	52151 05001	5230	9	52560 05101	5210	9
45191 05010	4511	2	47861 06102	4641	4	48582 06C00	4850	11	49020 05121	4910	2	52155 05000	5230	8	52561 05101	5210	10
45210 05000	4511	3	47861 06501	4641	4	48585 05600	4850	10	49100 05503	4910	4	52161 05001	5230	9	52570 05001	5210	11
45220 05000	4511	3	47869 06000	4641	7	48586 05000	4850	5	49219 03012	4910	7	52165 05000	5230	8	52580 05001	5210	11
45301 05210	4511	4	47869 06100	4641	8	48610 05A10	4821	1	49226 03012	4910	6	52191	7520	11	52590 05000	5210	12
45312 03000	4511	9	47870 05330	4641	3	48620 05A10	4821	2	50030 05400	5110	1	52250 05016	5230	11	52601 05103	5210	13
45351 05000	4511	10	47875 05001	4641	9	48630 05A01	4821	3	50030 05530	5110	1	52250 05026	5230	11	52602 05104	5210	13
45401 05001	4511	11	47875 05101	4641	10	48640 05A02	4821	5	51301 05303	5730	1	52260 05026	5230	11	52605 05108	5210	14
45421 05000	4511	12	48006	7440	3	48650 05A00	4821	7	51313 05011	5730	2	52260 05302	5230	11	52606 05108	5210	14
45501 05302	4511	13	48110 05013	4830	1	48655 03000	4821	9	51350 05001	5730	4	52276 05001	5230	2	52630 05502	5210	15

PART NO. INDEX

PART NO.	GROUP NO.		PART NO.	GROUP NO.		PART NO.	GROUP NO.		PART NO.	GROUP NO.		PART NO.	GROUP NO.		PART NO.	GROUP NO.	
52640 05502	5210	15	56575 05032	5620	15	57534 05000	5730	12	601 997 04 10	1221	9	62330 05002	7120	14	661 542 31 17	1521	26
52651 05601	5210	16	56582 05000	5620	8	57551 05002	5730	13	601 997 04 10	1221	23	62340 05002	7120	14	661 542 31 17	1541	12
52655 05100	5210	17	56586 05000	5620	8	57552 05000	5730	14	601030 054052	1130	23	62810 05001	6210	3	661 542 31 17	1542	10
52661 05001	5210	16	56591 05000	5620	13	57553 05000	5730	15	601030 054052	1130	23	62810 05001	6310	3	661 980 30 15	1130	21
52665 05100	5210	17	56710 05004	5610	2	58706	7520	25	60111 05000	5120	3	62820 05001	6210	3	661 990 32 12	1331	10
52711 05102	5210	18	56760 05004	5610	2	601 030 00 62	1130	24	60112 05000	5120	4	62820 05001	6310	3	661 990 32 12	1332	13
52721 05102	5210	18	57100 05108	5710	1	601 030 01 62	1130	24	60113 05000	5120	5	62901 05004	6210	4	661 991 30 41	1130	28
52730 05101	5210	19	57100 05145	5710	1	601 030 02 62	1130	24	60116 05000	5120	6	62901 05004	6310	4	661 991 30 41	1130	28
52731 05100	5210	20	57114 05005	5710	21	601 030 03 62	1130	24	60123 05001	5120	10	62902 05000	6210	5	661 991 30 41	1211	3
52740 05101	5210	19	57117 05000	5120	26	601 030 04 62	1130	24	60124 05000	5120	9	62902 05000	6310	5	661 991 32 29	1123	9
52741 05100	5210	20	57301 05247	5720	41	601 030 06 40	1130	23	60131 05000	5120	15	63003 05065	6310	2	661 991 32 29	1124	13
540 130 60 00	1211	10	57302 05263	5720	42	601 030 06 40	1130	23	60133 05001	5120	16	63003 05083	6310	2	661 991 33 29	1124	13
540 130 60 00	1211	10	57313 05000	5720	4	601 030 07 40	1130	23	60141 05000	5120	19	63004 05065	6310	2	661 995 33 44	1532	32
540 130 80 00	1211	5	57314 05001	5720	5	601 030 07 40	1130	23	60143 05000	5120	20	63004 05083	6310	2	661 997 30 45	1531	32
540 130 80 00	1211	5	57316 05000	5720	6	601 030 08 40	1130	23	60153 05001	5120	22	631 323 03 85	4420	2	661 997 30 45	1532	39
54111 05101	5620	9	57323 05000	5720	25	601 030 08 40	1130	23	60156 05000	5120	23	63610 05001	7090	8	661 997 31 47	1123	14
55111 05002	5510	1	57324 05001	5720	26	601 030 09 40	1130	23	60156 05100	5120	23	63810 05001	6310	3	661 997 31 47	1124	16
55111 05022	5510	1	57326 05000	5720	27	601 030 09 40	1130	23	60165 05000	5120	24	63820 05001	6310	3	661 997 36 46	1331	2
55112 05000	5510	3	57331 05002	5720	7	601 052 06 74	1311	7	60165 05100	5120	24	64040 05008	6410	1	661 997 36 46	1332	2
55121 05000	5510	4	57334 05041	5720	10	601 180 01 55	1531	4	603 014 08 22	1532	28	64810 05001	6410	43	661 201 35 39	1522	7
55122 05000	5510	3	57336 05000	5720	11	601 180 01 55	1532	4	603 053 03 25	1211	33	661 010 30 14	1123	15	662 991 30 68	1130	3
55310 05010	5510	6	57341 05002	5720	28	601 181 01 42	1532	6	603 053 03 25	1211	33	661 010 30 14	1124	17	662 997 30 72	1123	7
55321 05001	5510	7	57350 05024	5720	29	601 181 01 50	1532	21	603 181 00 56	1531	10	661 011 30 08	1123	13	662 997 31 30	1531	28
55331 05000	5510	5	57360 05032	5720	15	601 181 01 74	1531	9	603 181 00 56	1532	9	661 011 30 08	1124	15	662 997 31 30	1532	34
55341 05003	5510	8	57360 05032	5720	30	601 181 01 74	1532	8	603 181 01 12	1531	14	661 011 30 13	1123	2	662 997 31 72	1123	4
55350 05101	5510	9	57372 05000	5720	22	601 184 01 32	1542	4	603 993 02 01	1532	7	661 011 30 13	1124	2	662 997 31 72	1124	22
56110 05127	5610	1	57374 05000	5720	23	601 184 07 80	1542	8	604 014 00 22	1531	29	661 011 31 71	1123	3	665 200 30 70	1332	12
56115 03100	5620	11	57376 05001	5720	31	601 184 07 80	1542	13	604 181 06 20	1532	2	661 011 31 71	1124	3	665 990 00 01	1130	8
56511 05112	5620	1	57376 05040	5720	31	601 990 09 40	1531	15	604 990 00 40	1130	7	661 011 32 71	1124	4	68310 05032	6840	3
56513 05001	5620	2	57379 05000	5720	3	601 990 09 40	1532	17	61001 05080	6110	2	661 031 31 51	1130	20	68311 05001	6840	30
56515 05001	5620	12	57379 05000	5720	24	601 991 00 01	1311	15	61810 05000	6110	9	661 130 31 15	6820	2	68312 05000	6840	31
56522 05000	5620	3	57389 05000	5720	24	601 992 01 25	1123	12	61819 05001	5720	2	661 181 31 42	1531	7	68313 05001	6840	28
56523 05000	5620	4	57416 05010	5720	32	601 992 01 25	1124	14	61819 05001	6110	4	661 181 31 42	1532	6	68314 05030	6840	29
56530 05012	5620	10	57422 05020	5720	18	601 992 03 25	1123	6	61820 05000	6110	9	661 186 01 01	1531	5	68320 05001	6820	18
56533 05001	5620	2	57428 05011	5720	34	601 992 03 25	1124	12	61830 05001	6110	3	661 186 30 80	1531	38	68410 05030	6850	4
56552 05100	5620	7	57436 05020	5720	12	601 992 04 25	1211	18	61840 05001	6110	3	661 201 33 39	1522	14	68420 05431	2120	5
56558 05000	5620	5	57445 05040	5720	38	601 992 04 25	1522	8	61860 05001	6110	5	661 202 30 22	1331	11	68420 06351	2120	5
56559 05000	5620	6	57446 05040	5720	19	601 992 04 25	1531	6	62003 05066	6210	1	661 202 30 22	1332	14	68430 05030	6820	21
56562 05100	5620	7	57500 05109	5730	11	601 992 04 25	1532	12	62003 05084	6210	1	661 323 37 40	4420	3	68510 05250	6820	6
56569 05000	5620	6	57500 05117	5730	11	601 993 08 01	1531	8	62004 05066	6210	1	661 542 30 17	1521	24	68610 05221	6850	8
56571 05010	5620	14	57512 05001	5610	4	601 997 04 10	1130	2	62004 05084	6210	1	661 542 30 17	1522	15	68610 05241	6850	8

PART NO. INDEX

PART NO.	GROUP NO.		PART NO.	GROUP NO.		PART NO.	GROUP NO.		PART NO.	GROUP NO.		PART NO.	GROUP NO.		PART NO.	GROUP NO.	
68620 05510	6820	9	71161 05001	6110	7	71452 05000	6410	7	72201 05503	7115	1	72430 05010	7210	9	72945 05001	7220	13
68620 05520	6820	9	71171 05050	5710	7	71455 05000	6410	8	72201 05553	7115	1	72434 05010	7110	10	72980 05010	7210	13
68630 05250	6820	10	71172 05000	5710	18	71460 05000	6410	9	72201 05900	7115	1	72434 05010	7210	10	73110 05002	7221	1
68640 05250	6820	11	71173 05000	5710	14	71469 05000	6410	10	72201 05950	7115	1	72440 05010	7110	9	73120 05002	7221	1
68710 05420	8210	21	71180 05000	5710	8	71470 05020	7310	3	72202 05503	7115	1	72440 05010	7210	9	73130 05003	7221	2
68891 05003	2120	33	71181 05001	5710	9	71476 05002	7310	4	72202 05553	7115	1	72450 05010	7110	11	73140 05003	7221	2
69100 05231	6810	2	71190 05050	5710	10	71477 05001	6410	13	72202 05900	7115	1	72460 05010	7110	11	73201 05502	7215	1
69112 05031	6810	7	71201 05004	7110	1	71478 05001	6410	13	72202 05950	7115	1	72470 05000	7110	12	73201 05552	7215	1
69200 06212	6810	4	71202 05004	7110	1	71479 05001	6410	14	72215 05020	7115	3	72470 05000	7210	11	73201 05900	7215	1
69210 05401	6810	6	71209 05001	7110	18	71480 05030	6410	15	72215 05020	7215	3	72472 05000	6410	30	73201 05950	7215	1
69220 05000	6810	20	71209 05001	7210	18	71484 05000	6410	17	72236 05500	7115	13	72472 05000	7110	13	73202 05502	7215	1
69321 05050	6830	1	71250 05000	7110	2	71485 05000	6410	18	72236 05500	7215	11	72472 05000	7115	10	73202 05552	7215	1
69322 05053	6830	2	71250 05000	7210	1	71486 05004	6410	19	72246 05500	7115	13	72472 05000	7210	12	73202 05900	7215	1
69323 05053	6830	2	71271 05010	7110	3	71489 05000	6410	20	72246 05500	7215	11	72472 05000	7215	7	73202 05950	7215	1
69324 05051	6830	3	71272 05010	7110	3	71491 05000	6410	21	72270 05500	7115	4	72510 05003	7121	11	73291 05103	7221	3
69330 05400	7610	6	71273 05001	7115	2	71492 05000	6410	21	72278 05001	7115	8	72512 05001	7121	12	73301 05106	7220	1
69341 05000	6830	6	71273 05001	7215	2	71495 05001	6410	22	72279 05000	6410	27	72512 05001	7221	13	73302 05106	7220	1
69346 05400	7610	11	71278 05000	7110	4	71497 05000	7610	16	72279 05000	7115	9	72512 05010	7121	12	73311 05103	7840	22
69411 05020	6820	27	71287 05031	7110	22	71498 05002	6410	23	72280 05500	7115	4	72520 05003	7121	11	73312 05002	7220	5
69411 05040	6820	28	71288 05041	7110	22	71610 05001	7090	1	72290 03000	7310	5	72530 05011	7121	13	73314 05000	7220	4
69420 05020	6820	30	71295 05002	7110	6	71628 05000	5710	11	72290 05000	7115	17	72540 05011	7121	13	73317 05103	7840	23
69431 05000	6820	31	71296 05002	7110	6	71628 05000	7090	2	72290 05000	7215	16	72551 05500	7115	6	73321 05103	7840	22
69520 05402	7610	30	71297 05002	7110	15	71628 05000	7820	11	72291 05103	7121	5	72561 05500	7115	6	73327 05103	7840	23
69523 11000	7610	13	71297 05002	7210	16	71629 05000	7090	3	72292 05000	7121	8	72610 05501	7115	11	73450 05010	7210	15
69525 05402	7610	30	71301 05002	7210	2	71640 05001	7090	4	72292 05000	7221	6	72620 05501	7115	11	73460 05010	7210	15
69530 05402	7610	5	71302 05002	7210	2	71660 05000	7090	6	72296 03000	7110	7	72651 05500	7115	25	73510 05001	7221	11
69610 05403	7610	9	71352 05000	7210	3	71741 03001	7950	1	72296 03000	7210	7	72661 05500	7115	25	73520 05001	7221	11
69620 05403	7610	10	71362 05001	7210	3	72110 05004	7121	1	72296 03000	7310	6	72680 05500	7115	31	73530 05003	7221	12
69630 05403	7610	4	71370 05002	7210	4	72120 05004	7121	1	72311 05103	7840	21	72690 05500	7115	31	73540 05003	7221	12
69635 05402	7610	5	71371 05010	7210	5	72130 05003	7121	2	72312 05002	7120	8	72831 05011	7120	6	73610 05501	7215	8
69640 05403	7610	8	71372 05010	7210	5	72140 05003	7121	2	72314 05000	7120	7	72841 05011	7120	6	73620 05501	7215	8
71043 05000	7010	5	71380 05002	7210	4	72150 05000	7121	3	72321 05103	7840	21	72880 05010	7110	14	73651 05500	7215	25
71080 05400	7610	26	71387 05000	7110	20	72152 01001	5710	12	72330 05103	7120	1	72910 05002	7220	11	73661 05500	7215	25
71110 06002	5710	6	71399 05020	7210	6	72153 21000	5710	13	72340 05103	7120	1	72914 05001	7220	14	73671 03001	7010	3
71120 05003	5710	2	71403 05000	6410	41	72154 05000	7121	4	72410 05010	7110	8	72920 05002	7220	11	74001 05744	7410	1
71130 05000	5710	3	71404 05000	6410	41	72160 05000	7121	3	72410 05010	7210	8	72931 05001	7220	6	74001 05833	7410	1
71140 05050	5710	4	71409 08000	6410	16	72164 05000	7121	4	72420 05010	7110	8	72932 05000	7220	12	74002 05623	7410	2
71142 05002	5710	16	71415 05000	6410	3	72191 05000	6410	25	72420 05010	7210	8	72933 05000	7220	10	74002 05892	7410	2
71150 05050	5710	5	71416 05000	6410	4	72191 05000	7121	6	72424 05010	7110	10	72935 05001	7220	13	74008 050A0	7410	24
71152 05002	5710	16	71417 05001	7310	1	72191 05000	7121	6	72424 05010	7210	10	72941 05001	7220	6	74103 05000	7420	7
71160 05053	6110	6	71451 05000	7310	2	72191 05000	7221	4	72430 05010	7110	9	72943 05000	7220	10	74105 05000	7420	7

PART NO. INDEX

PART NO.	GROUP NO.		PART NO.	GROUP NO.		PART NO.	GROUP NO.		PART NO.	GROUP NO.		PART NO.	GROUP NO.		PART NO.	GROUP NO.	
74110 05000	7440	7	76560 05404	7610	15	77470 05021	7740	8	77962 05402	7630	9	78844 05000	7880	9	79419 05000	5730	28
74110 05020	7440	1	76580 05405	7610	17	77480 05005	7730	8	77975 05402	7630	7	78845 05000	7880	8	79421 05003	5730	21
74110 05030	7440	1	76590 05404	7610	12	77490 05005	7730	8	78200 05003	7810	7	78855 05000	7880	11	79430 07010	7910	1
74110 05070	7440	7	76630 05501	7610	18	77510 05700	7330	2	78310 05000	7810	2	78862 05010	7880	7	79452 05001	7910	13
74115 05000	7410	5	76640 05501	7610	19	77515 08000	7330	1	78320 05000	7810	2	78872 05010	7880	10	79491 05000	5730	24
74116 05000	7410	5	76650 05404	7610	20	77595 05404	7610	12	78350 05000	7810	3	78881 05002	7880	19	79511 05800	7930	1
74634 05001	7430	4	76810 05108	7740	2	77610 05003	7330	4	78359 03011	7720	22	78930 05013	7120	5	79516 05800	7930	2
74635 05001	7430	4	76813 05000	7740	3	77612 05001	7330	5	78359 03011	7720	23	78940 05013	7120	5	79516 05810	7930	10
74636 05000	7530	12	76830 05201	7740	4	77612 05001	7330	5	78360 05000	7810	4	78960 05001	7120	4	79521 05800	7930	1
75000 05272	7510	14	76832 05006	7740	6	77613 05000	7330	6	78420 05010	7820	1	78970 05001	7120	4	79526 05800	7930	2
75000 05581	7510	14	76833 05003	7740	7	77613 05000	7330	6	78422 05011	7820	18	78980 05061	7850	1	79526 05810	7930	10
75000 05601	7510	14	76840 05003	7740	5	77615 05001	7330	7	78426 05000	7820	17	78985 05010	7850	5	79531 05800	7930	4
75103050A0	7520	44	76842 05005	7740	6	77615 05001	7330	7	78480 05011	7820	16	78990 05061	7850	2	79531 05811	7930	13
75106 05000	7420	7	76861 05002	6410	32	77620 05003	7330	4	78481 05002	7820	7	78995 05010	7850	5	79536 05800	7930	3
75600 05000	7520	6	76890 05010	7740	9	77631 05000	7330	8	78510 05000	7830	1	79110 05311	7840	1	79536 05810	7930	11
75660 05000	7530	11	77110 05105	7720	1	77681 05000	7730	9	78514 05000	7830	7	79110 05321	7840	1	79539 05800	7930	34
75910 05001	7510	15	77118 06000	7720	4	77681 05020	7730	10	78515 05000	7830	8	79110 05331	7840	1	79541 05800	7930	4
76110 05012	7770	1	77119 06000	7720	19	77681 05020	7730	11	78516 05000	7830	10	79111 05301	7840	2	79541 05811	7930	13
76120 05250	7770	1	77141 05131	7720	3	77710 05405	7610	21	78520 05001	7830	3	79112 05000	7840	4	79546 05800	7930	3
76142 05002	7770	2	77146 05000	7720	7	77714 05410	7630	15	78530 05000	7830	9	79120 05001	7840	8	79546 05810	7930	11
76151 05000	6410	29	77147 05000	7720	8	77750 05402	7610	23	78550 05001	7820	3	79122 05000	7840	9	79551 05100	7930	9
76151 05000	7740	1	77148 05000	7720	9	77769 05405	7630	12	78570 05003	7820	4	79127 05000	7840	6	79551 05800	7930	5
76151 05000	7770	3	77149 05000	7720	10	77900 05222	7630	1	78571 05000	7820	12	79132 05002	7840	10	79551 05800	7930	14
76414 06000	7770	8	77210 05323	7720	12	77901 05222	7630	1	78573 05000	7820	13	79134 05000	7840	11	79554 05000	7930	44
76422 05001	7840	3	77230 05022	7720	24	77902 05402	7630	17	78574 05000	7820	14	79135 05000	7840	12	79556 05801	7930	6
76422 05800	7840	3	77260 05005	7720	14	77910 05405	7630	14	78580 05003	7820	5	79136 05001	7840	20	79557 06000	7930	17
76470 05000	7770	4	77265 05002	7720	15	77911 05401	7630	11	78708 05002	7870	15	79142 05002	7840	13	79559 05800	7930	45
76470 05980	7770	4	77270 05005	7720	14	77913 05401	7630	10	78710 05123	7870	1	79144 05000	7840	14	79561 05100	7930	9
76474 05980	7770	9	77275 05002	7720	15	77915 05402	7630	8	78710 05801	7870	1	79145 05000	7840	15	79561 05800	7930	5
76501 05409	7610	1	77280 05000	7720	16	77923 05401	7630	10	78711 05801	7870	2	79230 05012	7840	16	79561 05800	7930	14
76513 05401	7610	39	77285 05115	7720	18	77925 05411	7630	4	78722 05800	7870	3	79240 05012	7840	16	79564 05001	7930	57
76515 05404	7610	22	77288 08B20	9110	7	77930 05414	7630	2	78723 05800	7870	3	79251 05000	7840	17	79566 05801	7930	6
76520 05401	7610	40	77290 05400	7720	17	77930 05814	7630	2	78726 05000	7870	14	79311 05012	7840	19	79568 05002	7930	16
76522 05402	7610	25	77301 05003	7730	1	77932 05400	7630	3	78761 05800	7870	5	79320 05014	7840	18	79568 05002	7930	18
76523 05402	7610	29	77302 05003	7730	1	77932 05800	7630	3	78762 05800	7870	5	79410 05008	5730	22	79571 05800	7930	8
76524 05404	7610	14	77335 05001	7730	3	77935 05402	7630	5	78810 05801	7880	1	79411 05003	5730	21	79571 05800	7930	15
76525 05000	7610	3	77345 05001	7730	3	77940 05404	7610	33	78811 05800	7880	2	79415 05000	5730	23	79576 05800	7930	7
76526 05402	7610	14	77350 0500A	7730	6	77946 05401	7610	31	78834 05800	7880	6	79416 05000	7870	4	79579 05800	7930	78
76530 05403	7610	2	77360 05005	7730	6	77950 05401	7630	13	78835 05800	7880	6	79416 05000	7880	10	79581 05800	7930	8
76550 05406	7610	7	77390 05003	7730	5	77952 05404	7630	6	78836 05800	7880	5	79417 05001	5730	26	79581 05800	7930	15
76556 05402	7610	41	77460 05020	7740	8	77960 05404	7630	16	78837 05800	7880	5	79418 05000	5730	29	79586 05800	7930	7

PART NO. INDEX

PART NO.	GROUP NO.		PART NO.	GROUP NO.		PART NO.	GROUP NO.		PART NO.	GROUP NO.		PART NO.	GROUP NO.		PART NO.	GROUP NO.	
79610 05811	7940	12	83202 05502	7870	10	85520 05701	8510	13	89311 05000	8610	5	914005 008027	1221	3	914021 006016	1430	3
79611 05801	7940	1	83401 05301	8310	13	85710 05030	4810	6	89312 05000	8610	1	914005 008027	1311	33	914021 008020	1332	20
79620 05811	7940	12	83401 05301	8310	13	85720 05010	4910	5	89320 06100	8610	2	914005 008029	1331	13	914034 008000	1453	3
79710 05800	7920	1	83601 05752	8320	2	85730 05111	8510	15	89420 07002	8920	15	914005 008029	1332	16	914034 008005	1542	12
79716 05002	7920	3	83601 07001	8320	2	85740 05000	8510	16	900271 015144	1542	17	914005 008029	1453	2	914034 008013	1542	12
79717 05000	7530	13	83602 05752	8320	3	85760 06001	3030	26	91098 14801	4511	30	914005 008029	1531	26	914034 008015	1542	12
79717 05000	7920	4	83604 07001	8320	3	85760 06001	8510	17	91098 14951	4511	28	914005 008029	1532	27	914035 006011	1441	5
79720 05800	7920	1	83701 05101	8320	1	85780 05020	8510	18	91247 1035D	2421	22	914005 008029	1532	30	914035 008004	1332	4
79726 05002	7920	3	83710 05801	8610	19	85790 05000	3740	3	91247 1035D	2422	22	914005 008044	1332	18	914126 008077	1331	18
79730 05800	7920	2	83720 05801	8610	3	85801 05901	3740	6	91247 1245D	4411	19	914007 006012	1531	23	914126 010068	1453	4
79736 05003	7920	5	83730 05801	8610	6	85810 05711	8510	19	913017 006000	1430	7	914007 006025	1440	2	914141 006502	1311	32
79740 05800	7920	2	83740 05102	8610	7	85820 05700	7115	19	91304 0825D	4410	14	914007 008017	1332	3	914145 006401	1123	16
79756 05002	7920	8	83745 05102	8610	7	85830 05700	7115	20	91347 10301	3030	28	914007 008017	1453	5	915013 008002	1713	6
79766 05002	7920	8	83750 05001	8610	20	85830 05700	7215	19	914005 006002	1532	23	914008 008009	1522	19	915023 010001	1712	6
79922 05001	7950	8	83850 05002	8320	9	85890 05702	8510	9	914005 006005	1124	18	914008 008009	1522	33	91504 06200	7610	35
79955 05010	7950	18	83850 05102	8320	9	85901 05192	8510	25	914005 006005	1531	3	914010 006008	1532	31	916026 016001	1542	19
79957 05000	7950	17	83860 05001	8320	6	85920 05101	8810	6	914005 006005	1531	25	914010 006012	1531	25	916026 028000	1521	14
79961 05020	7950	14	83870 05000	8320	7	85921 06000	8510	28	914005 006005	1532	3	914010 006012	1532	31	916026 036000	1522	24
79962 05010	7950	16	83901 05100	8320	8	86110 05073	7810	11	914005 006005	1532	31	914010 008003	1331	15	91604 0830D	2312	9
79977 05000	7950	13	83902 05100	8320	8	86150 05010	7830	16	914005 006008	1221	4	914010 008018	1221	4	91607 0825D	6820	24
81110 05700	8510	32	84130 05000	8410	1	86320 05000	7820	10	914005 006009	1521	6	914010 008018	1311	10	91607 0825D	6850	24
82110 05001	8210	2	84150 01300	8410	2	86320 05000	7820	15	914005 006009	1521	22	914010 008018	1311	33	91627 06081	7110	23
82121 06000	8210	4	84150 01300	8410	2	86510 05002	8610	12	914005 006017	1531	25	914010 008027	1453	3	91627 06081	7210	23
82190 05000	8210	32	84150 01300	8410	2	86511 05101	8610	13	914005 006020	1531	34	914010 008027	1521	6	91627 0610D	6410	34
82310 05011	2610	7	84150 01300	8410	2	86550 05002	8610	12	914005 006020	1531	36	914010 008027	1521	21	91627 0610D	7120	10
82320 05020	8210	8	84170 05102	8410	3	86960 11000	7010	6	914005 006020	1532	25	914010 008033	1521	15	91627 0610D	7220	19
82512 05000	6830	4	84190 01301	8410	5	86970 05800	7010		914005 006020	1542	22	914010 008033	1112	7	91630 12651	4410	12
82512 05000	7090	7	84190 05100	8410	4	87310 05800	7420	37	914005 006038	1521	6	914010 008033	1331	17	91708 08181	3010	4
82900 05000	8210		84210 05001	8410	8	87930 08700	8610	23	914005 006038	1521	23	914010 010021	1453	4	92014 10001	4810	12
82911 05001	8210	26	84210 05001	8410	8	88100 05002	7120	2	914005 006041	1311	10	914011 006018	1221	10	92024 0800D	2610	5
82952 05010	7090	5	84410 05100	8410	6	88100 05002	7220	2	914005 006041	1521	6	914011 006019	1221	10	92034 10001	3030	6
82952 05020	4641	11	84410 06100	8410	1	88100 05102	7120	2	914005 006041	1521	19	914011 008013	6820	3	92036 1200D	1990	5
82952 05030	6820	17	85210 05701	8510	2	88100 05102	7220	2	914005 008005	1331	18	914020 006017	1331	24	92036 1200D	4411	13
82960 05101	8210		85241 05700	8510	14	88350 05051	7110	21	914005 008008	1112	3	914020 006017	1332	7	92036 14001	4611	11
82960 05301	8210		85250 05701	8510	3	88350 05061	7110	21	914005 008008	1113	3	914020 008004	1453	8	92064 0800D	4410	11
82980 05010	3740	5	85260 05711	8510	5	88360 05050	7210	14	914005 008009	1211	11	914020 008004	1542	12	92076 1200D	4411	20
83101 05332	8310	2	85270 05701	8510	6	88360 05060	7210	14	914005 008011	1522	31	914020 008009	1532	13	92076 1600D	4511	38
83102 05332	8310	2	85330 05010	6810	8	88370 05050	7310	8	914005 008015	1112	7	914020 008009	1531	13	92114 10001	3030	29
83201 05502	7870	10	85340 05000	8510	10	89105 06002	8910	11	914005 008015	1221	3	914020 008013	1713	2	92286 14001	4620	8
83201 05502	8310	3	85350 06000	8510	11	89108 05700	8910	16	914005 008020	1112	9	914021 006001	1332	11	92316 1400D	4310	10
83201 05502	8310	3	85510 05701	8510	12	89310 05001	8610	14	914005 008020	1113	7	914021 006001	1521	8	92864 10001	4810	14

PART NO. INDEX

PART NO.	GROUP NO.		PART NO.	GROUP NO.		PART NO.	GROUP NO.		PART NO.	GROUP NO.		PART NO.	GROUP NO.		PART NO.	GROUP NO.	
92884 0600D	2312	28	93674 40081	4115	15	95814 0835D	4821	28	98274 0620D	3710	8	H7201-05004	3162	39	PB03A-2707	4121	13
92884 0600D	3710	6	93685 80301	7110	16	95817 0825D	4180	8	98274 0620D	7090	9	H7201-05004	3164	06	PB03A-2708	4121	11
92884 0600D	3740	12	93685 80301	7210	17	95817 0825D	5120	25	98274 0625D	2010	23	H8105-55001	8310	18	PB03A-2709	4121	18
92884 0600D	5710	20	93685 80301	7310	7	95820 1035D	3310	6	98274 0625D	3740	11	PA04A-0022	4211	14	PB03A-2710	4121	7
92884 0600D	6410	35	93704 4012D	7115	14	95827 1040D	3710	12	98274 0625D	6820	26	PA04A-0023	4211	15	PB03A-2711	4121	8
92884 0800D	2421	25	93704 4012D	7115	14	95837 1025D	4511	25	98284 0620D	6810	17	PA04A-0024	4211	19	PB03A-2712	4121	20
92884 0800D	2422	25	93704 4012D	7215	12	95837 1030D	4420	17	98294 0616D	2421	26	PA04A-0031	4211	17	PB03A-2801	4121	6
92884 0800D	2610	16	93704 6020D	7090	10	95837 1030D	4511	32	98294 0616D	2422	26	PA04A-0032	4211	16	PB03A-2801	4121	6
92884 0800D	3020	3	93705 50200	8310	15	95837 1030D	7440	2	98294 0630D	2120	22	PA04A-0033	4211	12	PB03A-2813	4121	6
92884 0800D	3710	7	93804 5012B	7110	24	95837 1030D	7520	42	98294 0630D	6850	25	PA04A-0035	4211	13	PB03A-3503	4121	40
92894 10001	4411	12	93804 5012B	7210	24	95907 0816D	6410	33	98297 0620D	5710	19	PA04A-0056	4211	5	PB03A-3504	4121	40
92894 10001	4420	19	93804 50162	6410	38	95917 0830D	4613	5	98414 4020D	7940	11	PA04A-0059	4211	7	PB03A-3505	4121	37
92896 1000D	1990	7	93804 50162	7610	34	95917 0830D	7410	21	98414 5020B	8010	12	PA04A-0068	4211	23	PB03A-3506	4121	38
92896 1000D	2421	24	93804 50162	8910	14	95917 0830D	7510	21	98464 4010D	7215	13	PA04A-0069	4211	22	PB03A-3507	4121	36
92896 1000D	2422	24	93804 5018B	7740	13	95917 0840D	7410	22	99003 08100	7110	17	PA04A-0083	4121	5	PB03A-5501	4121	30
92896 1000D	3710	11	93804 6016D	7110	19	9600653	7520	29	99004 06000	2610	15	PA04A-0083	4211	25	PB03A-5504	4121	30
92896 1000D	5120	12	93804 6016D	7210	19	9600659	7520	2	99012 08201	3710	5	PA04A-0128	4211	42	PB03A-5505	4121	31
92896 1000D	5120	13	93804 6016D	7215	14	9600685	7520	1	99020 10003	3010	7	PA04A-0144	4211	26	PB03A-5508	4121	2
92896 1200D	4310	9	93804 6016D	7720	20	96610 60550	8310	16	99060 10001	4411	29	PA04A-2311	4211	22	PB03A-5511	4121	2
92898 1000D	3310	8	93804 6016D	7720	21	96660 00211	8310	19	99060 10001	4420	18	PA07C-0006	3162	37	PB03A-5514	4121	3
92944 08000	5120	28	93814 4008B	7121	22	96660 H1550	8310	17	99060 10001	4511	33	PA07C-0011	3141	11	PB03A-5517	4121	3
93054 08001	4613	6	93814 4008B	7221	22	9701401	7420	18	99060 12001	4410	13	PA07C-0011	3161	11	PB03A-5520	4121	39
93074 06001	4641	12	94201 40640	7880	14	9701402	7420	18	99060 12003	4511	27	PA07C-0020	3146	03	PB03A-5521	4121	4
93074 06001	7870	12	94407 08001	6820	25	9701405	7420	17	99060 14000	4410	15	PA07C-0020	3166	03	PB03A-5524	4121	34
93310 0800D	2610	14	946 572 40 07	1522	26	9701408	7420	17	99060 14000	4411	22	PA07C-0021	3141	10	PB04A-1005	4211	1
93310 0800D	4410	10	94600 22001	2210	16	9701410	7520	29	99060 14000	4511	29	PA07C-0021	3161	10	PB04A-1006	4211	1
93310 0800D	4613	8	94657 14007	2130	20	9701411	7520	1	99060 14001	4310	13	PB03A-1501	4121	1	PB04A-1006	4211	1
93310 10001	3030	7	94657 14007	2130	20	9701412	7520	2	99065 08000	3740	10	PB03A-1501	4121	1	PB04A-1025	4211	1
93310 10001	4810	11	94911 05000	8310	14	98054 0610D	7120	11	99126 08100	8310	12	PB03A-1505	4121	1	PB04A-1026	4211	1
93310 1200D	3310	7	95140 16300	2312	33	98054 0610D	7220	20	99131 04000	2130	21	PB03A-2605	4121	19	PB04A-1026	4211	1
93310 1200D	4310	11	95140 40120	5120	11	98064 0512B	7610	34	99131 04000	2130	21	PB03A-2606	4121	21	PB04A-2101	4211	10
93310 1200D	4411	18	95304 3025D	4620	9	98074 0616D	7740	14	99131 05500	2210	11	PB03A-2607	4121	22	PB04A-2101	4211	10
93310 1200D	4830	7	95304 3030D	4410	17	98207 06121	7120	9	99131 05500	2210	55	PB03A-2608	4121	23	PB04A-2113	4211	10
93310 1200D	4841	10	95304 3030D	4411	30	98207 06121	7220	17	EA600D0010	1490	1	PB03A-2609	4121	24	PB04A-2201	4211	2
93310 1600D	4511	37	95314 10001	3030	27	98264 0625D	4890	4	EA600D0020	1490	1	PB03A-2610	4121	25	PB04A-2201	4211	2
933101000D	4110	17	95314 10001	4810	15	98274 0520B	4821	27	G23K-210	1112	1	PB03A-2611	4121	27	PB04A-2203	4211	2
93384 0800D	3010	5	95669 1095D	1990	8	98274 0612D	4115	16	G32K-211	1113	1	PB03A-2612	4121	26	PB04A-2203	4211	2
93384 14001	4611	12	95717 0830D	4910	8	98274 0612D	4841	8	H0106-06129	3166	21	PB03A-2701	4121	9	PB04A-2205	4211	2
93414 1200D	1990	6	95767 1235D	4115	13	98274 0620D	2111	13	H1098 14001	4411	23	PB03A-2702	4121	10	PB04A-2205	4211	2
93414 1200D	4310	12	95767 12551	4411	15	98274 0620D	2120	12	H1647 10201	5120	13	PB03A-2703	4121	15	PB04A-2301	4211	3
93414 1400D	4411	21	95804 0830D	6850	23	98274 0620D	2120	12	H5977 10101	5120	7	PB03A-2704	4121	17	PB04A-2301	4211	3
93554 4020D	7610	36	95804 1025D	3020	9	98274 0620D	2130	34	H7201-05004	3142	35	PB03A-2705	4121	14	PB04A-2303	4211	4
93654 60161	8920		95814 0820D	4810	13	98274 0620D	2130	34	H7201-05004	3144	06	PB03A-2706	4121	16	PB04A-2304	4211	8

PART NO. INDEX

PART NO.	GROUP NO.		PART NO.	GROUP NO.		PART NO.	GROUP NO.		PART NO.	GROUP NO.		PART NO.	GROUP NO.		PART NO.	GROUP NO.	
PB04A-2305	4211	6	PB07C-0004	3166	18	PB07C-0011-012	3162	01	PB07C-0037-002	3162	05	PB07C-0050-006	3162	34	PB07C-0058	3143	04
PB04A-2306	4211	9	PB07C-0005	3144	02	PB07C-0011-013	3142	01	PB07C-0037-003	3142	05	PB07C-0050-006	3164	03	PB07C-0058	3163	05
PB04A-2308	4211	18	PB07C-0005	3164	02	PB07C-0011-013	3162	01	PB07C-0037-003	3162	05	PB07C-0050-007	3142	34	PB07C-0059	3143	06
PB04A-2309	4121	29	PB07C-0006	3141	9	PB07C-0011-014	3142	01	PB07C-0038	3142	23	PB07C-0050-007	3144	03	PB07C-0059	3163	07
PB04A-2309	4211	21	PB07C-0006	3161	09	PB07C-0011-014	3162	01	PB07C-0038	3162	23	PB07C-0050-007	3162	34	PB07C-0060	3143	05
PB04A-2310	4211	23	PB07C-0007	3141	6	PB07C-0012	3142	02	PB07C-0040	3142	26	PB07C-0050-007	3164	03	PB07C-0060	3163	06
PB04A-2312	4211	23	PB07C-0007	3144	04	PB07C-0012	3162	02	PB07C-0040	3162	26	PB07C-0050-008	3142	34	PB07C-0061	3146	23
PB04A-3002	4211	38	PB07C-0007	3146	14	PB07C-0013	3142	04	PB07C-0041	3142	25	PB07C-0050-008	3144	03	PB07C-0062	3144	08
PB04A-3003	4211	38	PB07C-0007	3161	06	PB07C-0013	3162	04	PB07C-0041	3162	25	PB07C-0050-008	3162	34	PB07C-0062	3164	08
PB04A-3102	4211	39	PB07C-0007	3164	04	PB07C-0014	3142	03	PB07C-0042	3142	29	PB07C-0050-008	3164	03	PB07C-0063	3144	07
PB04A-3103	4211	45	PB07C-0007	3166	17	PB07C-0014	3162	03	PB07C-0042	3162	29	PB07C-0051	3162	35	PB07C-0063	3164	07
PB04A-3104	4211	40	PB07C-0008	3141	3	PB07C-0017	3162	14	PB07C-0043	3142	30	PB07C-0052	3162	36	PB07C-0064	3144	05
PB04A-3105	4211	44	PB07C-0008	3161	03	PB07C-0021	3142	12	PB07C-0043	3162	30	PB07C-0053	3162	38	PB07C-0064	3164	05
PB04A-3106	4211	43	PB07C-0009	3141	4	PB07C-0021	3162	12	PB07C-0044	3142	27	PB07C-0054-001	3143	03	PB07C-0065	3144	10
PB04A-3107	4211	46	PB07C-0009	3146	02	PB07C-0022	3142	24	PB07C-0044	3142	32	PB07C-0054-001	3163	03	PB07C-0065	3164	10
PB04A-3109	4211	47	PB07C-0009	3146	19	PB07C-0022	3162	24	PB07C-0044	3162	27	PB07C-0054-002	3143	03	PB07C-0066	3144	11
PB04A-3110	4211	41	PB07C-0009	3161	04	PB07C-0023	3142	16	PB07C-0044	3162	32	PB07C-0054-002	3163	03	PB07C-0066	3164	11
PB04A-5001	4211	24	PB07C-0009	3166	02	PB07C-0023	3162	16	PB07C-0047	3142	31	PB07C-0054-003	3143	03	PB07C-0067	3144	12
PB04A-5002	4211	24	PB07C-0010	3141	5	PB07C-0024	3142	19	PB07C-0047	3162	31	PB07C-0054-003	3163	03	PB07C-0067	3164	12
PB04A-5003	4121	31	PB07C-0010	3161	05	PB07C-0024	3162	19	PB07C-0048	3142	33	PB07C-0054-004	3143	03	PB07C-0068	3144	09
PB04A-5003	4211	26	PB07C-0011-001	3142	01	PB07C-0025	3142	17	PB07C-0048	3162	33	PB07C-0054-004	3163	03	PB07C-0068	3164	09
PB04A-5006	4211	28	PB07C-0011-001	3162	01	PB07C-0025	3162	17	PB07C-0050-001	3142	34	PB07C-0054-005	3143	03	PB07C-0069	3145	16
PB04A-5009	4211	29	PB07C-0011-002	3142	01	PB07C-0026	3142	18	PB07C-0050-001	3144	03	PB07C-0054-005	3163	03	PB07C-0069	3165	16
PB04A-5011	4211	49	PB07C-0011-002	3162	01	PB07C-0026	3162	18	PB07C-0050-001	3162	34	PB07C-0054-006	3143	03	PB07C-0070	3145	03
PB04A-5012	4211	50	PB07C-0011-003	3142	01	PB07C-0027	3142	10	PB07C-0050-001	3164	03	PB07C-0054-006	3163	03	PB07C-0070	3165	03
PB04A-5013	4211	51	PB07C-0011-003	3162	01	PB07C-0027	3162	10	PB07C-0050-002	3142	34	PB07C-0054-007	3143	03	PB07C-0071	3145	09
PB04A-5014	4211	37	PB07C-0011-004	3142	01	PB07C-0028	3142	08	PB07C-0050-002	3144	03	PB07C-0054-007	3163	03	PB07C-0071	3165	09
PB04A-5015	4121	32	PB07C-0011-004	3162	01	PB07C-0028	3162	08	PB07C-0050-002	3162	34	PB07C-0054-008	3143	03	PB07C-0072	3145	04
PB04A-5015	4211	30	PB07C-0011-005	3142	01	PB07C-0029	3142	09	PB07C-0050-002	3164	03	PB07C-0054-008	3163	03	PB07C-0072	3165	04
PB04A-5016	4211	32	PB07C-0011-005	3162	01	PB07C-0029	3162	09	PB07C-0050-003	3142	34	PB07C-0054-009	3143	03	PB07C-0073	3145	01
PB04A-5017	4211	34	PB07C-0011-006	3142	01	PB07C-0030	3142	21	PB07C-0050-003	3144	03	PB07C-0054-009	3163	03	PB07C-0073	3165	01
PB04A-5018	4121	35	PB07C-0011-006	3162	01	PB07C-0030	3162	21	PB07C-0050-003	3162	34	PB07C-0054-010	3143	03	PB07C-0074	3145	02
PB04A-5018	4211	33	PB07C-0011-007	3142	01	PB07C-0031	3142	15	PB07C-0050-003	3164	03	PB07C-0054-010	3163	03	PB07C-0074	3165	02
PB04A-5019	4121	33	PB07C-0011-007	3162	01	PB07C-0031	3162	15	PB07C-0050-004	3142	34	PB07C-0054-011	3143	03	PB07C-0075	3145	12
PB04A-5019	4211	31	PB07C-0011-008	3142	01	PB07C-0033	3142	13	PB07C-0050-004	3144	03	PB07C-0054-011	3163	03	PB07C-0075	3165	12
PB04A-5020	4211	35	PB07C-0011-008	3162	01	PB07C-0033	3162	13	PB07C-0050-004	3162	34	PB07C-0054-012	3143	03	PB07C-0079	3145	07
PB04A-5021	4211	48	PB07C-0011-009	3142	01	PB07C-0035	3142	22	PB07C-0050-004	3164	03	PB07C-0054-012	3163	03	PB07C-0079	3165	07
PB07A-0500	3010	1	PB07C-0011-009	3162	01	PB07C-0035	3162	22	PB07C-0050-005	3142	34	PB07C-0055	3143	02	PB07C-0080	3145	06
PB07A-0600	3010	2	PB07C-0011-010	3142	01	PB07C-0036	3142	11	PB07C-0050-005	3144	03	PB07C-0055	3163	02	PB07C-0080	3165	06
PB07C-0002	3141	1	PB07C-0011-010	3162	01	PB07C-0036	3162	11	PB07C-0050-005	3162	34	PB07C-0056	3143	07	PB07C-0081	3145	10
PB07C-0002	3161	01	PB07C-0011-011	3142	01	PB07C-0037-001	3142	05	PB07C-0050-005	3164	03	PB07C-0056	3163	08	PB07C-0081	3165	10
PB07C-0003	3144	01	PB07C-0011-011	3162	01	PB07C-0037-001	3162	05	PB07C-0050-006	3142	34	PB07C-0057	3143	01	PB07C-0082	3145	13
PB07C-0003	3164	01	PB07C-0011-012	3142	01	PB07C-0037-002	3142	05	PB07C-0050-006	3144	03	PB07C-0057	3163	01	PB07C-0082	3165	13

PART NO. INDEX

PART NO.	GROUP NO.		PART NO.	GROUP NO.		PART NO.	GROUP NO.		PART NO.	GROUP NO.		PART NO.	GROUP NO.		PART NO.	GROUP NO.	
PB07C-0083	3145	14	PB07C-0106	3141	12	R101A-0028	7770	1	R101K-0005	7530	7	R160M-0210	2312	1			
PB07C-0083	3165	14	PB07C-0106	3161	12	R101A-0034	7720	6	R101K-0006	7530	8	R160N-0100	2010	24			
PB07C-0084	3145	11	PB07C-0106	3166	26	R101D-0075	5210	25	R101K-0007	7530	9	R201J-0007	7420	26			
PB07C-0084	3165	11	PB07C-0108	3166	23	R101D-0085	7330	9	R101T-1004	7010	1	R201J-0022	7420	10			
PB07C-0085	3145	15	PB07C-0109	3166	24	R101E-0014	7840	1	R101T-1005	7010	1	R201K -0057	7520	14			
PB07C-0085	3165	15	PB07C-0110	3166	25	R101H-0001	7950	27	R101T-1010	8810	4	R201K -0064	7520	13			
PB07C-0086	3141	2	PB07C-0111	3010	3	R101H-0004	7950	3	R101T-1020	8810	1	R201K-0055	7520	20			
PB07C-0086	3161	02	PB07C-0112	3141	8	R101J-0004	7420	32	R101T-1100	7010	4	R201K-0059	7520	16			
PB07C-0087	3146	04	PB07C-0112	3161	08	R101J-0008	7420	8	R101T-1101	7010		R201K-0063	7520	15			
PB07C-0087	3166	04	PB07C-0113	3141	13	R101J-0009	7420	28	R101T-1105	7010	4	R201K-0067	7520	21			
PB07C-0088	3166	01	PB07C-0113	3161	13	R101J-0011	7420	31	R101T-1106	7010		R201T-1200	8510	25			
PB07C-0090	3146	05	PB07C-0117	3141	14	R101J-0018	7420	20	R102B-0030	4010	52	R203A-0010	4411	28			
PB07C-0090	3166	05	PB07C-0117	3161	14	R101J-0019	7410	13	R107A-0500	3710	1	R203A-0010	4410	16			
PB07C-0091	3146	12	PB07C-0133	3162	35	R101J-0019	7420	21	R107A-0600	3740	1	R205F-0200	4821	4			
PB07C-0091	3166	11	PB07C-0134	3162	35	R101J-0021	7410	11	R112C-0100	8310	2	R205F-0300	4821	6			
PB07C-0092	3146	10	PB07C-0135	3142	07	R101J-0021	7420	9	R112C-0200	8310	2	R211B-0001	7950	28			
PB07C-0092	3166	09	PB07C-0135	3162	07	R101J-0022	7410	11	R112H-1003	8210	1	R112J-0003	8010	1			
PB07C-0093	3146	08	PB07C-0136	3142	20	R101J-0022	7420	9	R112H-1024	8210	1	R112J-0004	8010	1			
PB07C-0093	3166	07	PB07C-0136	3162	20	R101J-0023	7410	20	R112H-3011	8210	7	R112J-0006	8010	1			
PB07C-0094	3145	08	PB07C-0137	3142	28	R101J-0023	7420	29	R112H-3031	8210	7						
PB07C-0094	3146	09	PB07C-0137	3162	28	R101J-0024	7410	10	R112H-4051	8210	25						
PB07C-0094	3146	11	PB07C-0148	3146	18	R101J-0024	7420	14	R112H-4061	8210	25						
PB07C-0094	3165	08	PB07C-0149	3141	7	R101J-0033	7420	20	R112H-5001	8210	12						
PB07C-0094	3166	08	PB07C-0149	3161	07	R101J-0034	7410	11	R112H-6001	8210	22						
PB07C-0094	3166	10	PB07C-0150	3146	06	R101J-0034	7420	9	R112H-7001	8210	16						
PB07C-0095	3146	20	PB07C-0150	3166	06	R101J-0051	7520	18	R112H-7002	8210	17						
PB07C-0095	3166	16	PB07C-1200	3160		R101J-0052	7520	18	R112H-7003	8210	18						
PB07C-0096	3146	21	PB07C-2001	3146	16	R101J-0056	7520	26	R112H-7004	8210	18						
PB07C-0096	3166	15	PB07C-2002	3142	14	R101J-0059	7520	41	R112H-8011	8210	20						
PB07C-0097	3146	22	PB07C-2003	3146	01	R101J-0060	7520	24	R112H-8014	8210	3						
PB07C-0097	3166	14	PB07C-2004	3146	07	R101J-0061	7520	43	R112H-8020	8210							
PB07C-0098	3145	05	PB07C-2100	3140		R101J-0062	7520	43	R112J-0003	8010	1						
PB07C-0098	3165	05	PB07C-3003	3142	03	R101J-0063	7520	23	R112J-0004	8010	1						
PB07C-0100	3142	06	PB07D-0100	3610	1	R101J-0070	7510	23	R112J-0006	8010	1						
PB07C-0100	3162	06	PB150-2050	3310	4	R101J-0071	7510	23	R112M-0001	7610	32						
PB07C-0101	3146	15	PB150-2070	3310	4	R101J-0111	7430	3	R112M-0001	8510	33						
PB07C-0101	3166	13	PB150-2310	3310	4	R101J-0113	7430	2	R112M-0005	7740	15						
PB07C-0102	3146	13	PB150-3020	3310	1	R101J-0114	7430	2	R114A-0009	7870	13						
PB07C-0102	3166	12	PB150-3040	3310	1	R101J-0115	7430	1	R114A-0011	7870	16						
PB07C-0103	3146	17	PB150-3070	3310	1	R101J-0116	7430	1	R114A-0016	7880	12						
PB07C-0103	3166	19	PBO7C-0104	3166	27	R101J-0121	7420	38	R114A-0016	7880	13						
PB07C-0105	3166	20	PE07E-0100	3210	01	R101J-0136	7410	10	R160M-0001	2312	7						
PB07C-0105	3166	22	PE07E-0200	3210	01	R101J-0136	7420	14	R160M-0200	2312	1						

ILLUSTRATION INDEX

1. ENGINE

1112 ENGINE UNIT- G23D

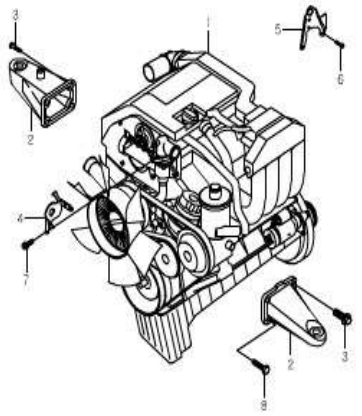

1113 ENGINE UNIT-G32D

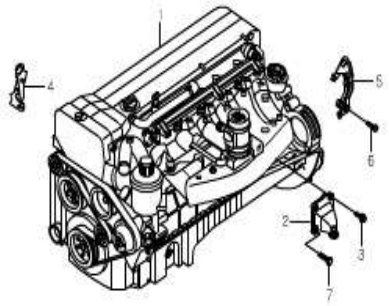

1123 CYLINDER BLOCK-G23D

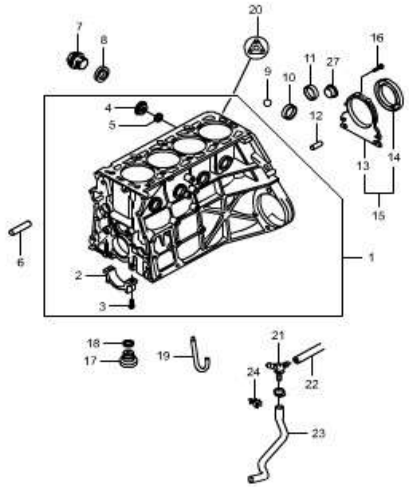

1124 CYLINDER BLOCK-G32D

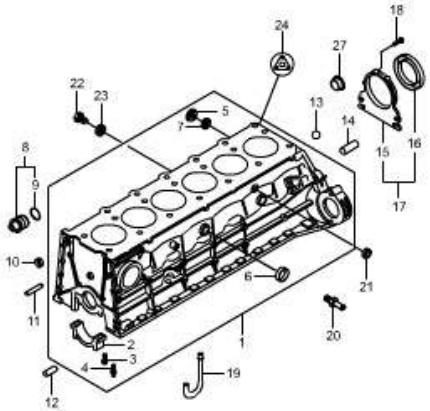

1130 CRANKSHAFT & FLYWHEEL

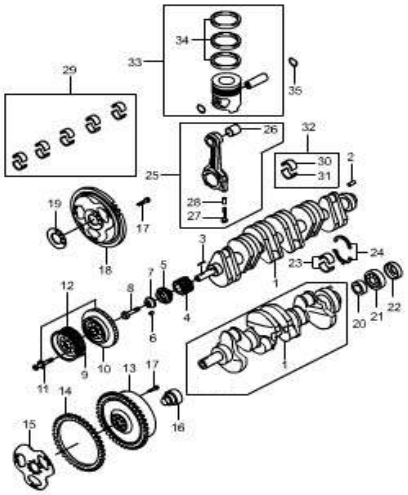

1211 CYLINDER HEAD & GASKET KIT

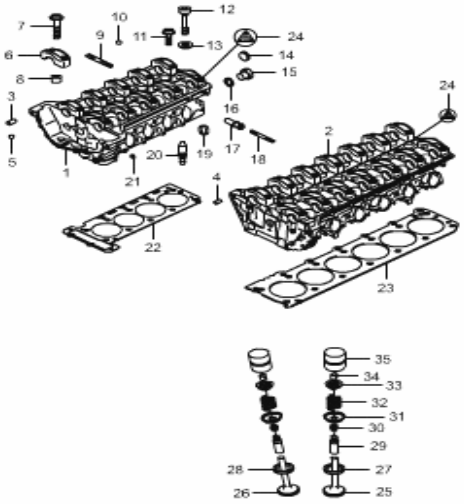

1221 CYLINDER HEAD COVER & CAMSHAFT

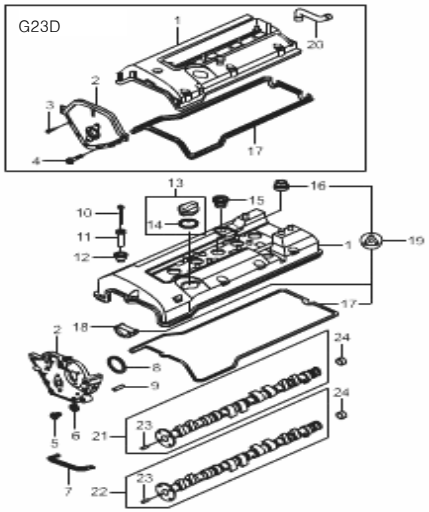

1311 CHAIN DRIVE

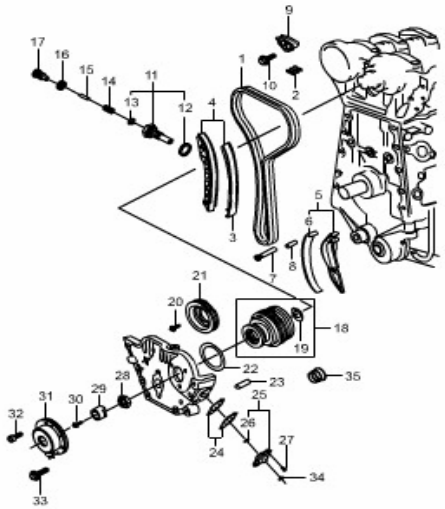

1. ENGINE

1331 TIMING CASE-G23D

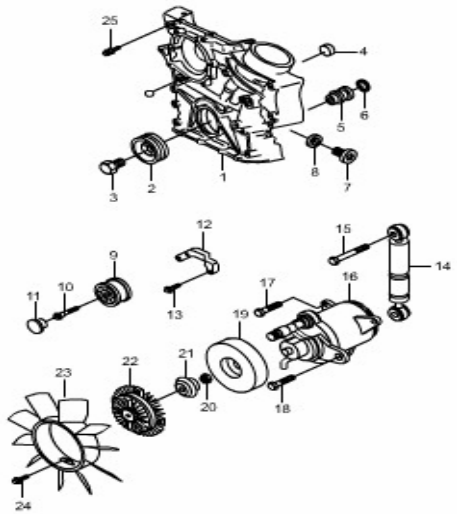

1332 TIMING CASE-G32D

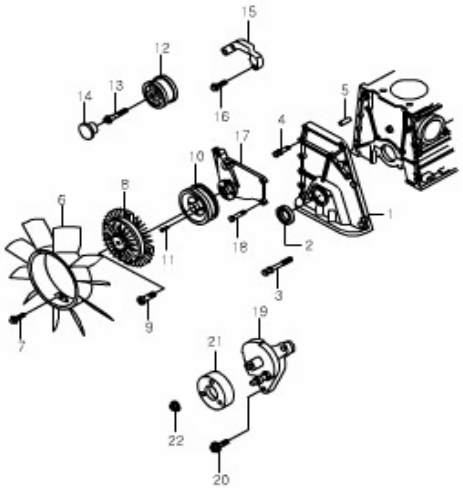

1350 BELT SYSTEM

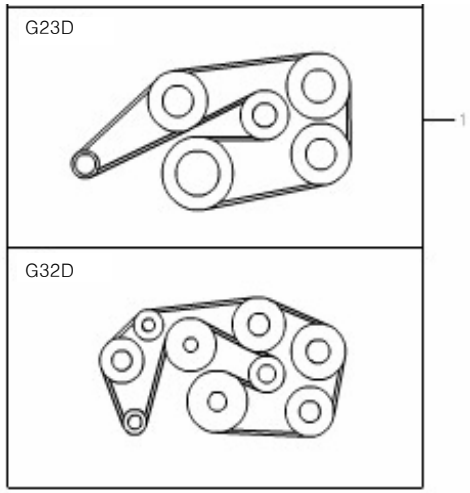

1411 ENGINE WIRING

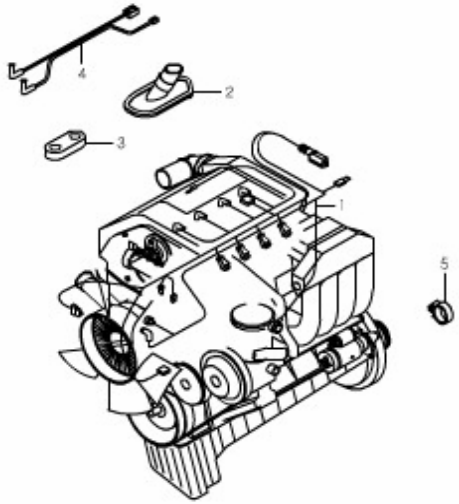

1430 SENSOR

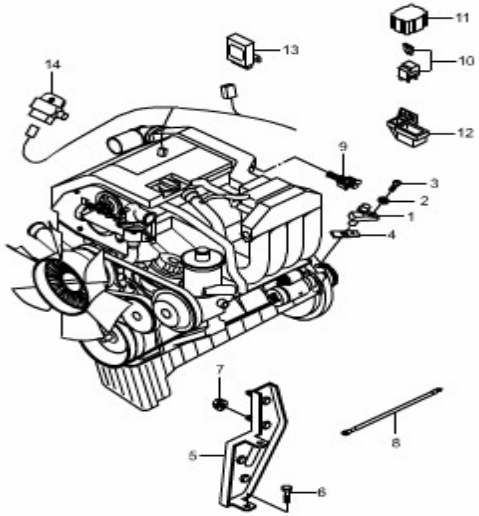

1440 IGNITION COIL-G23D

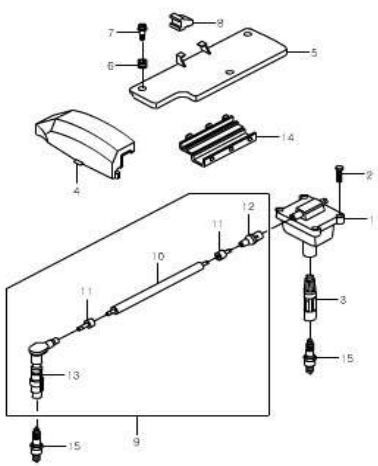

1441 IGNITION COIL-G32D

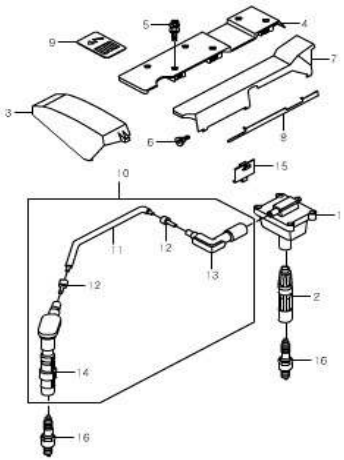

1452 ALTERNATOR

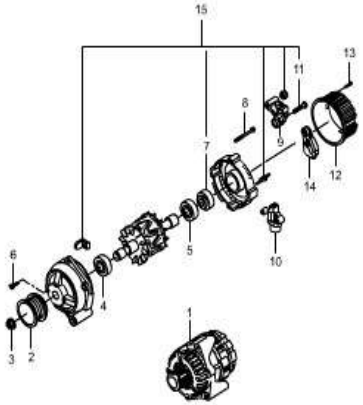

1. ENGINE

1453 ALTERNATOR MOUNTING

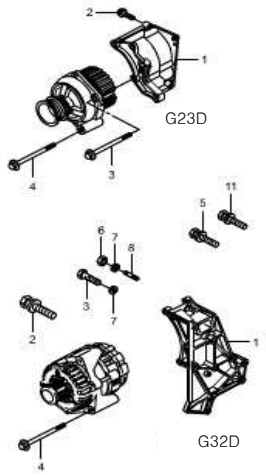

1462 STARTING MOTOR

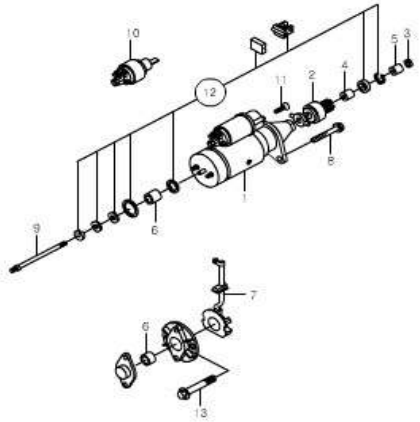

1490 EMISSION MODULE

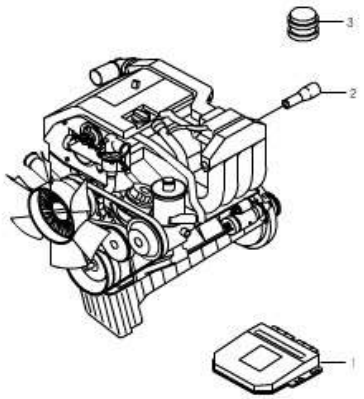

1521 COOLING SYSTEM-G23D

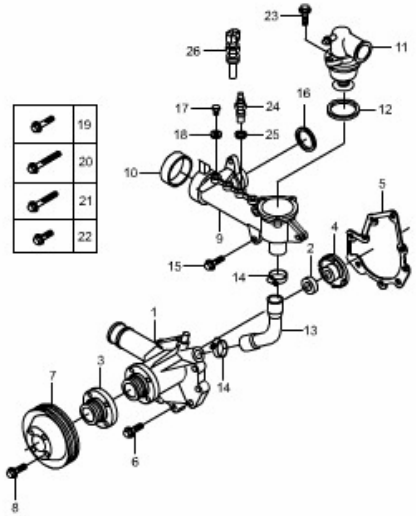

1522 COOLING SYSTEM-G32D

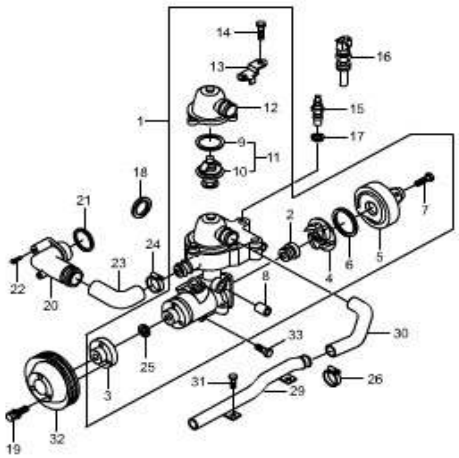

1531 OIL PAN & PUMP-G23D

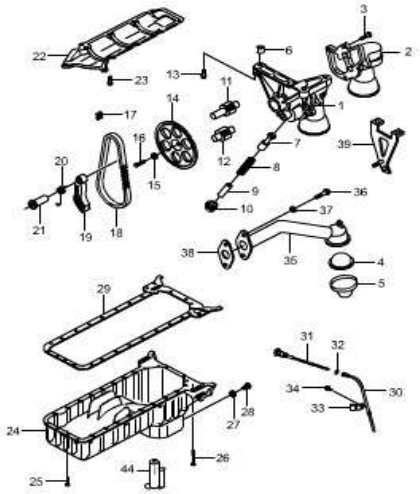

1532 OIL PAN & PUMP-G32D

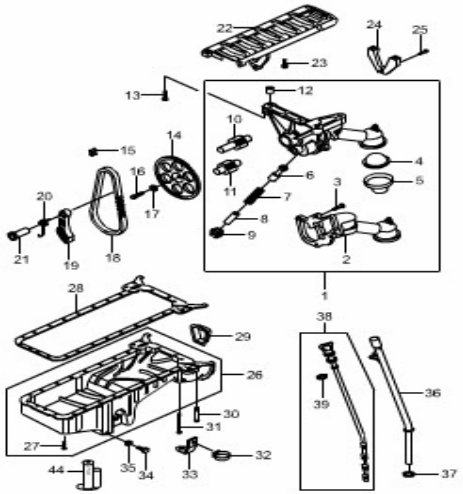

1541 OIL FILTER-G23D

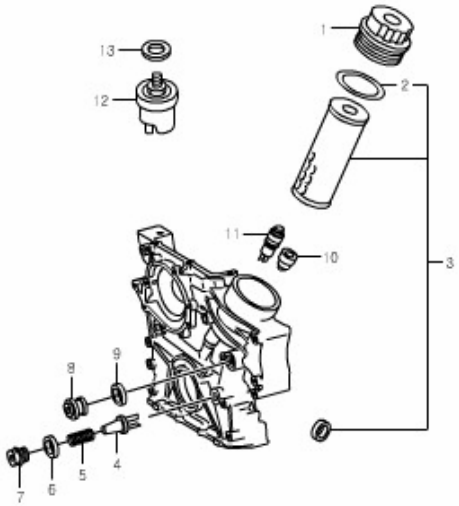

1. ENGINE

1542 OIL FILTER-G32D

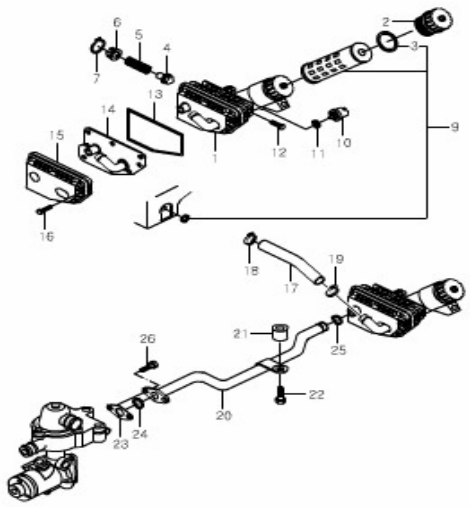

1623 VACUUM SYSTEM-G23D

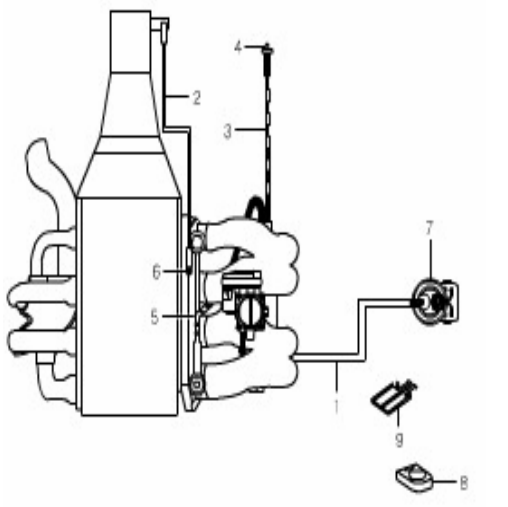

1624 VACUUM SYSTEM-G32D

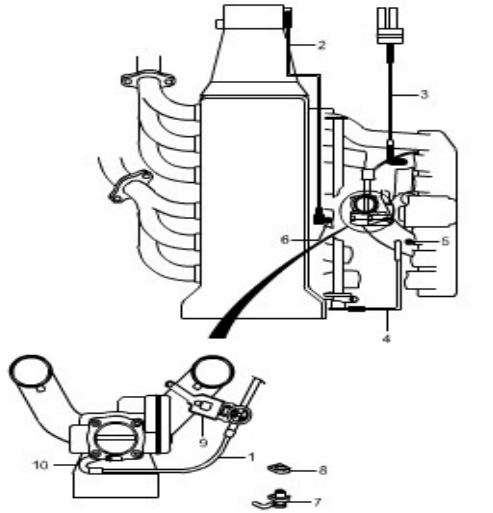

1712 INTAKE MANIFOLD-G23D

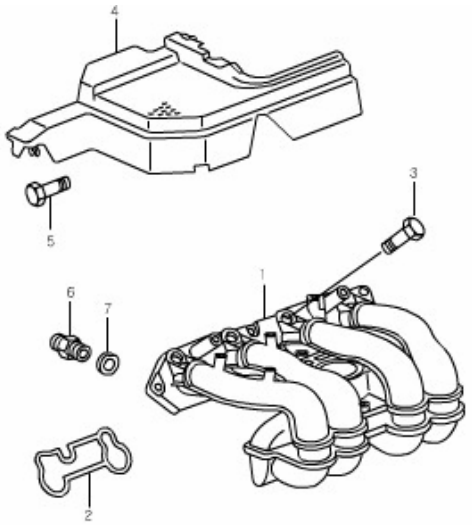

1713 INTAKE MANIFOLD-G32D

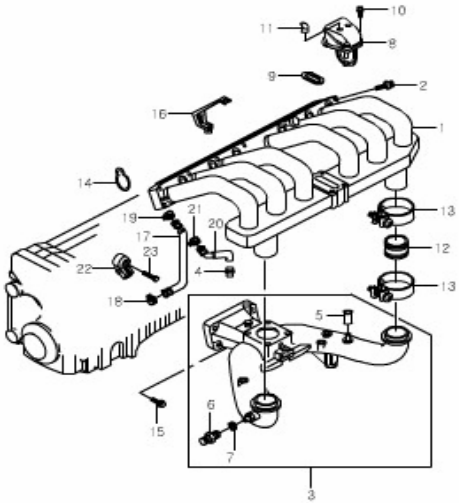

1722 EXHAUST MANIFOLD-G23D

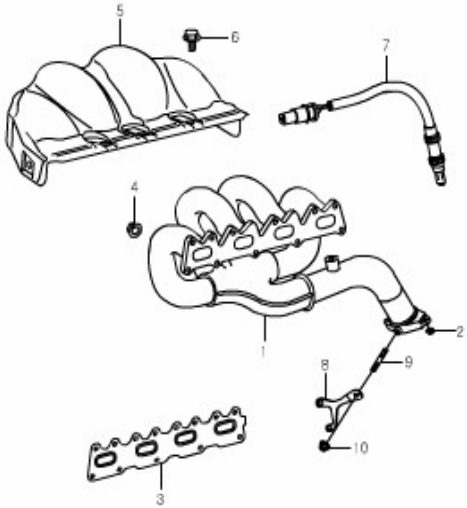

1723 EXHAUST MANIFOLD-G32D

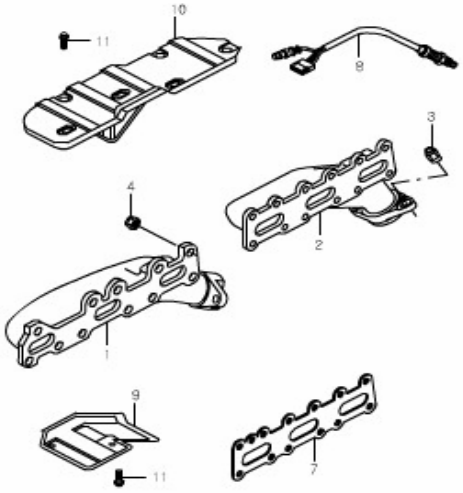

1842 INJECTION CONTROL SYSTEM-G23D

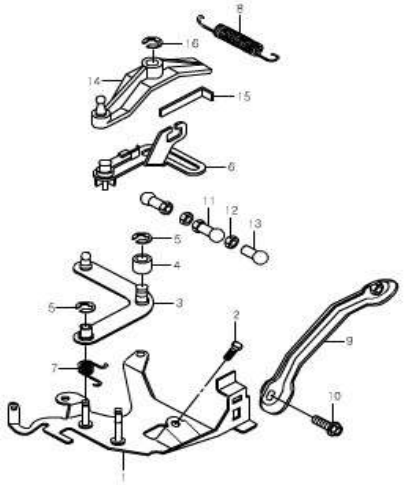

1. ENGINE

1843 INJECTION CONTROL SYSTEM-G32D

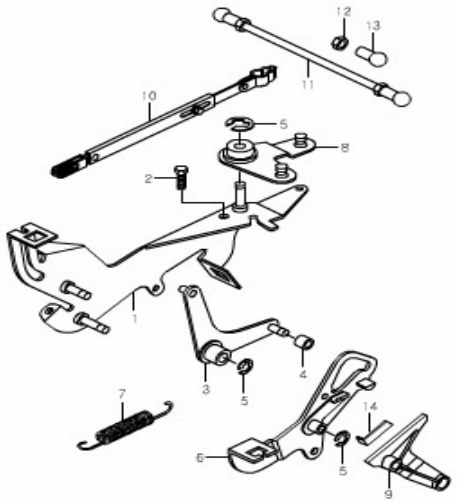

1990 ENGINE MOUNTING

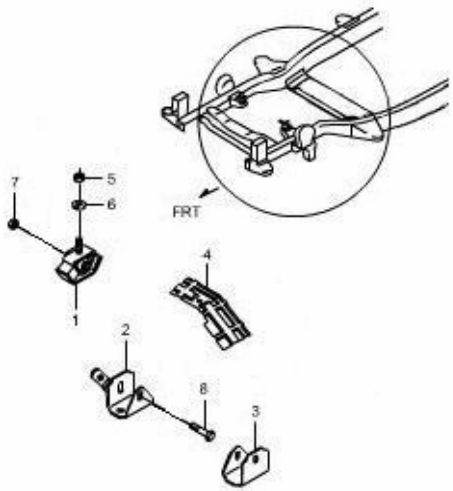

2. FUEL/ ENGINE CONTROL SYSTEM

2010 ACCELERATOR CONTROL

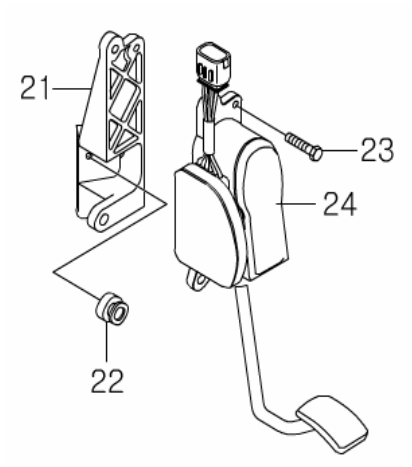

2111 RADIATOR

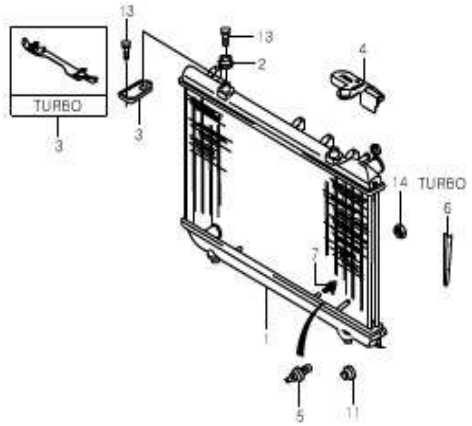

2120 COOLING FAN

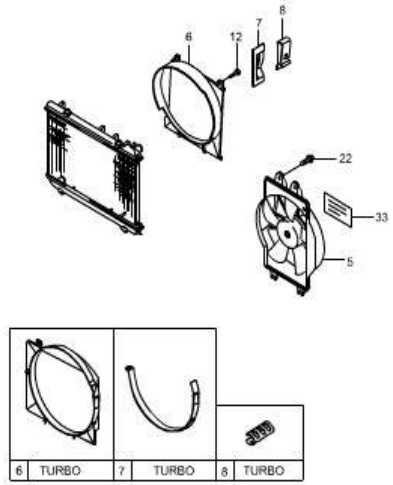

2130 RADIATOR HOSE & PIPE

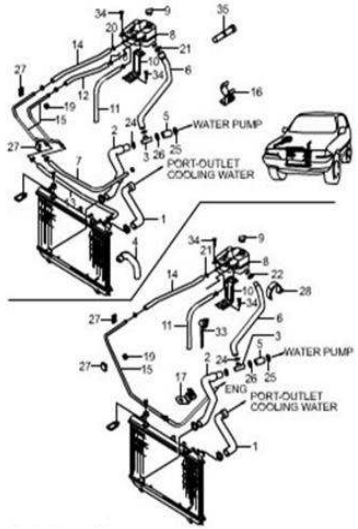

2210 FUEL TANK

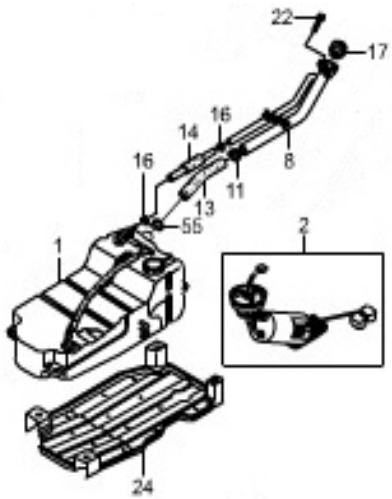

2221 FUEL LINE

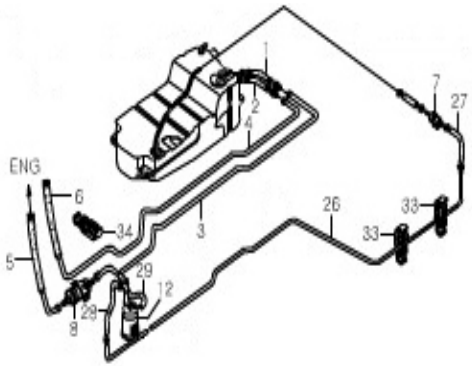

2312 AIR CLEANER

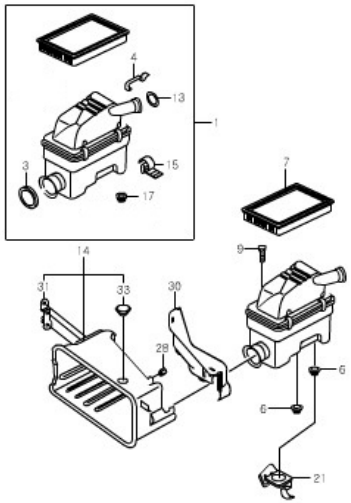

2421 EXHAUST SYSTEM-G23D

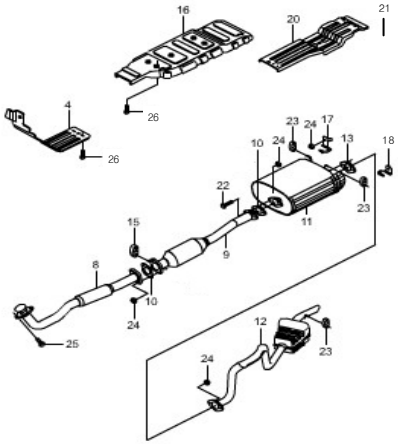

2. FUEL/ ENGINE CONTROL SYSTEM

2422 EXHAUST SYSTEM-G32D

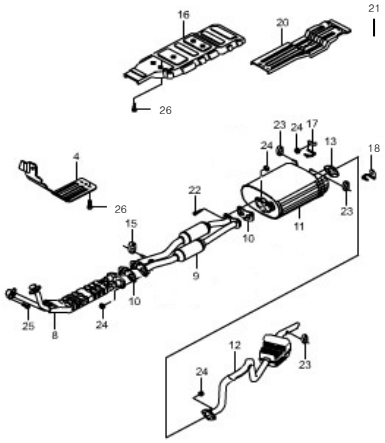

2610 BATTERY & CABLE

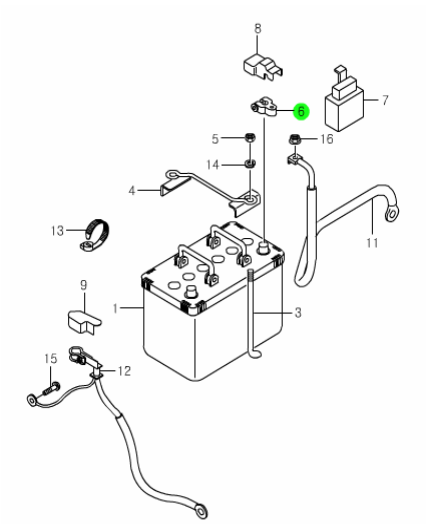

3. TRANSMISSION

3010 MANUAL TRANSMISSION CLUTCH DISC

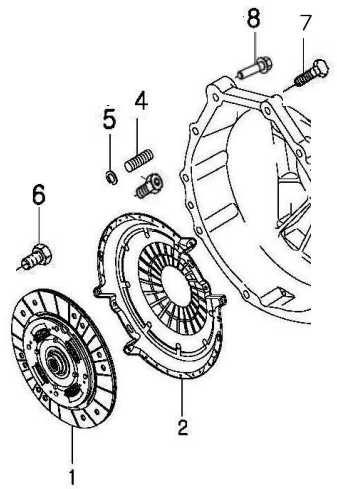

3020 CLUTCH CONTROL

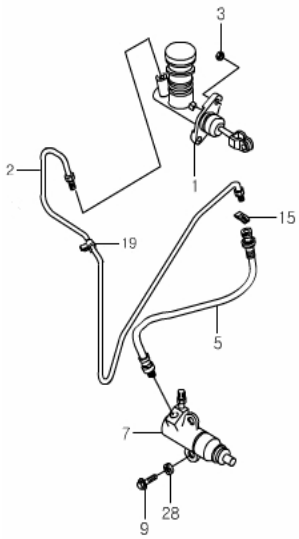

3030 CLUTCH PEDAL

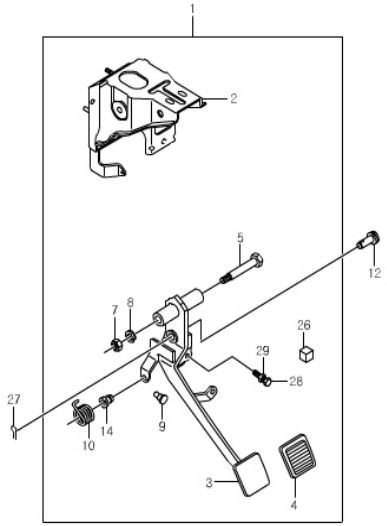

3110 TRANSMISSION(AT&MT) & TCU CONTROL SYSTEM

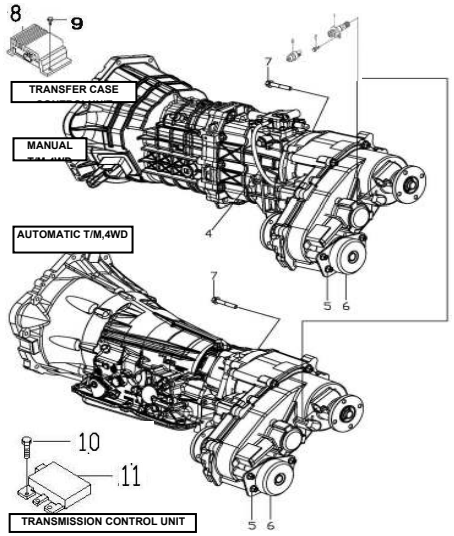

3140 MANUAL TRANSMISSION-4WD

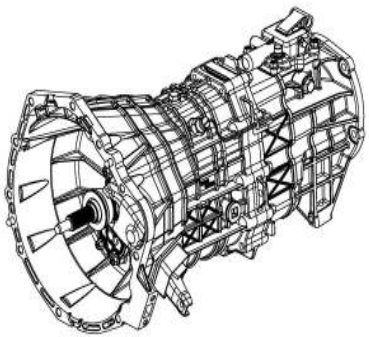

3141 CLUTCH HOUSING-4WD

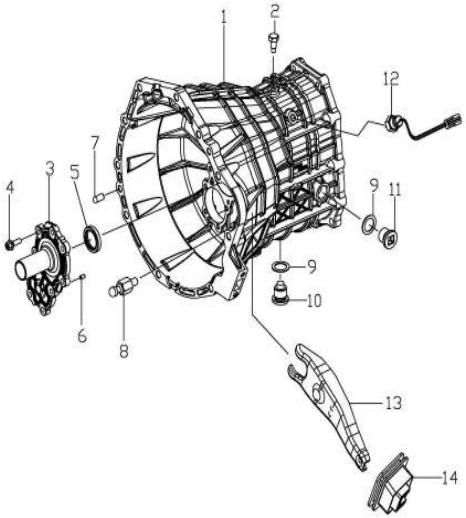

3142 OUTPUT & INPUT SHAFT-4WD

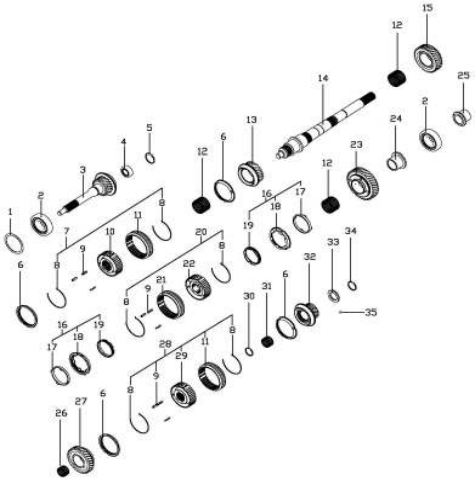

3143 COUNT SHAFT GEAR-4WD

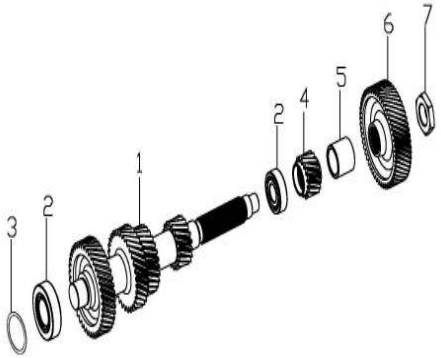

3. TRANSMISSION

3144 ADAPTOR-4WD

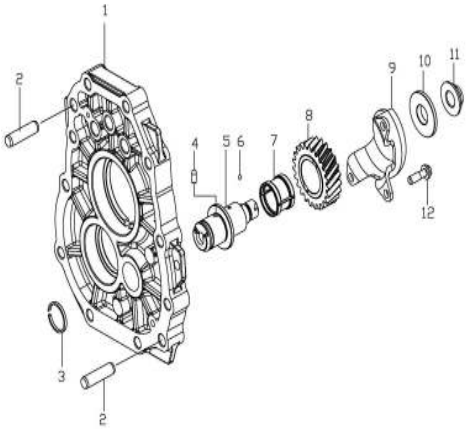

3145 RAIL & SHIFT FORK-4WD

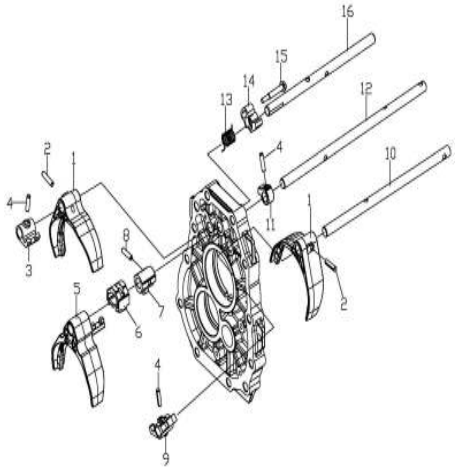

3146 SHIFTER & EXTENTION-4WD

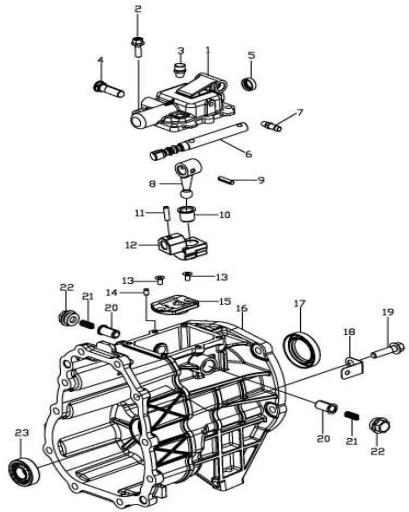

3160 MANUAL T/M-2WD

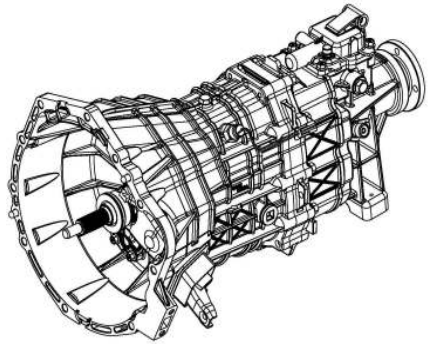

3161 CLUTCH HOUSING-2WD

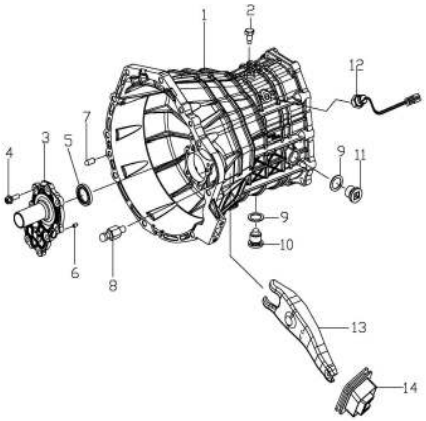

3162 OUTPUT & INPUT SHAFT-2WD

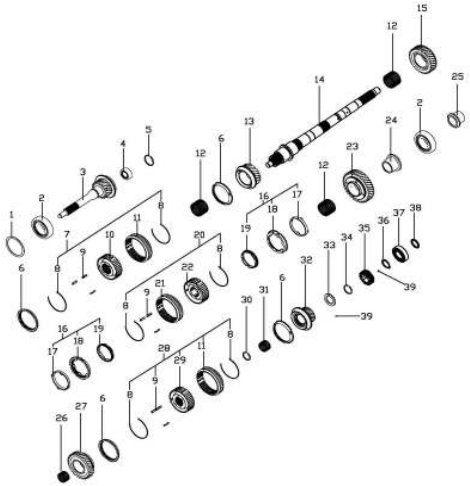

3163 COUNT SHAFT GEAR-2WD

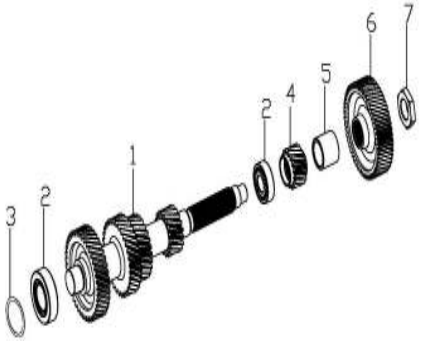

3164 ADAPTOR-2WD

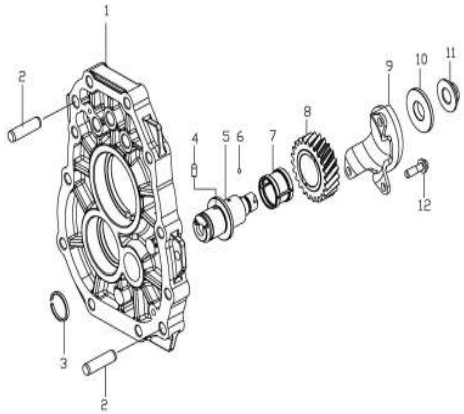

3. TRANSMISSION

3165 RAIL & SHIFT FORK-2WD

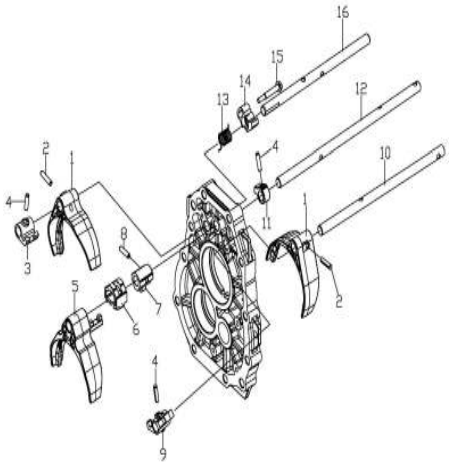

3166 SHIFT & EXTENSION-2WD

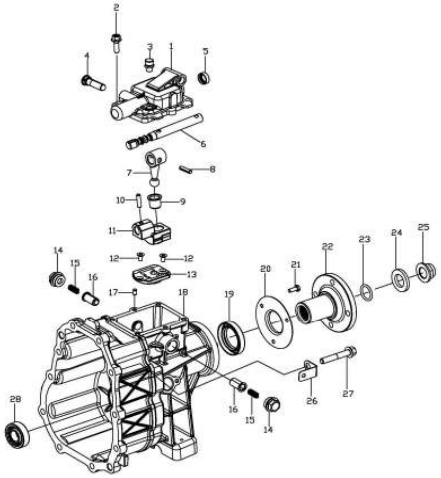

3176 SHIFTER & LEVEL-2WD

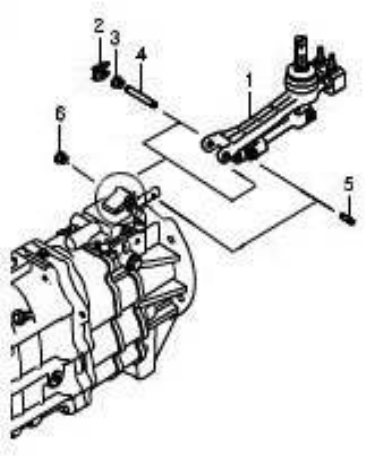

3210 TRANSFER CASE-PART TIME

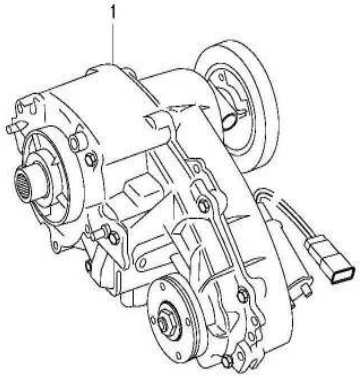

3211 TRANSFER CASE-PART TIME

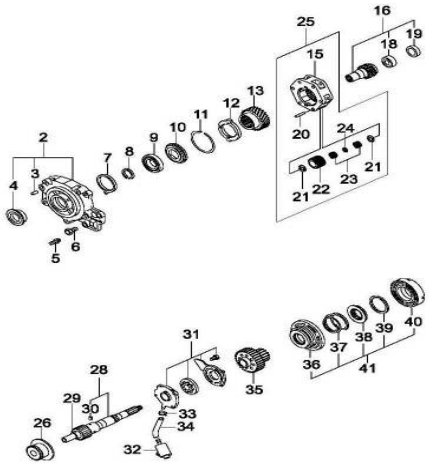

3212 TRANSFER CASE-PART TIME

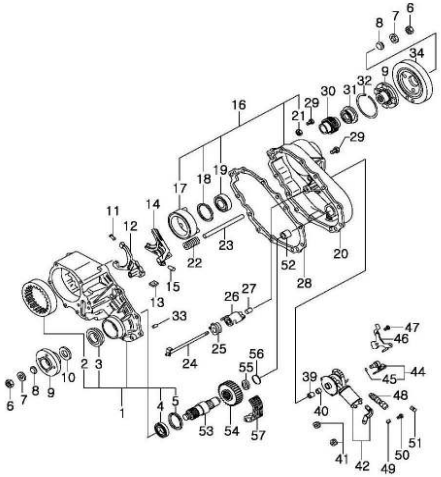

3310 PROPELLER SHAFT

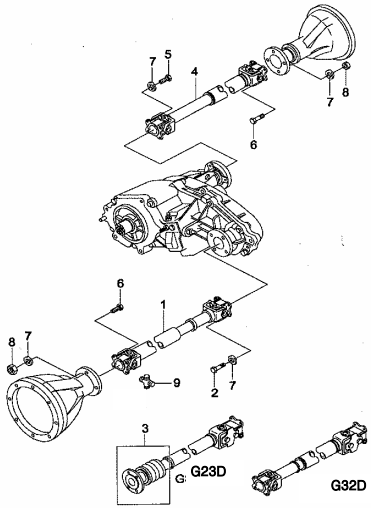

3610 AUTOMATIC TRANSMISSION-4WD(DSI M74)

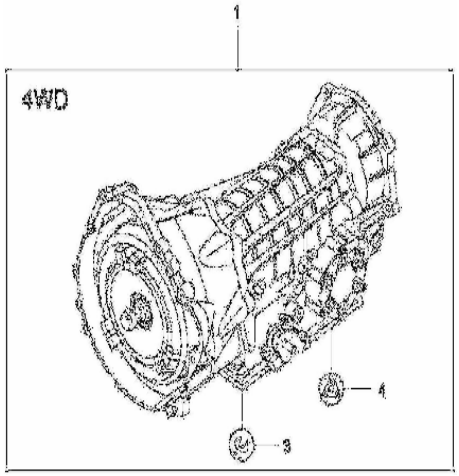

3. TRANSMISSION

3611 CONVERTER HOUSING & OIL PAN (DSI M74)

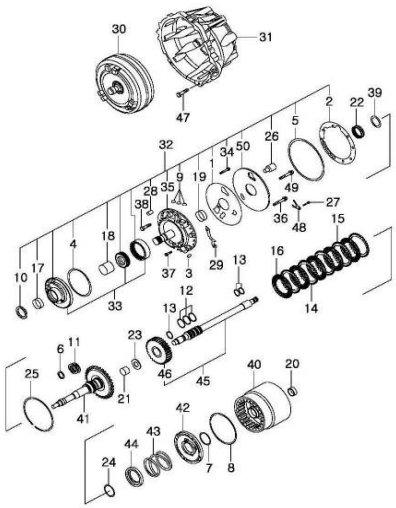

3612 TRANSMISSION HOUSING(DSI M74)

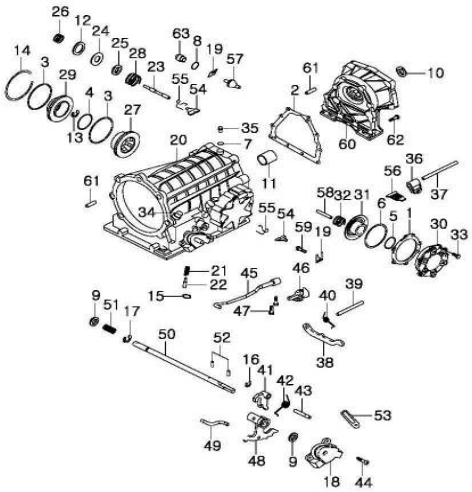

3613 VALVE BODY(DSI M74)

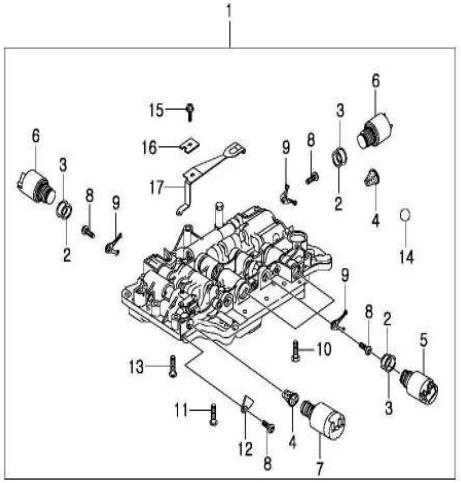

3614 OIL PAN(DSI M74)

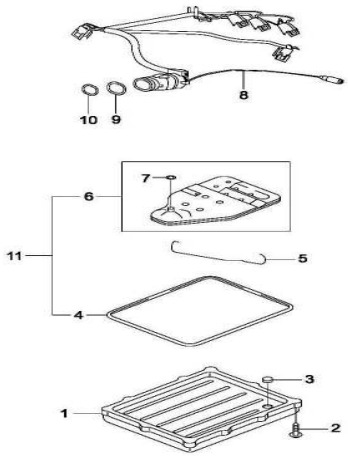

3615 CLUTCH(DSI M74)

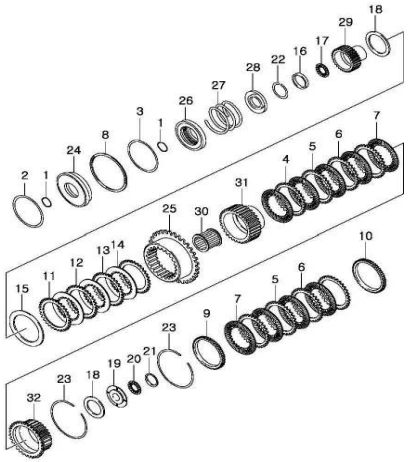

3616 OUTPUT SHAFT(DSI M74)

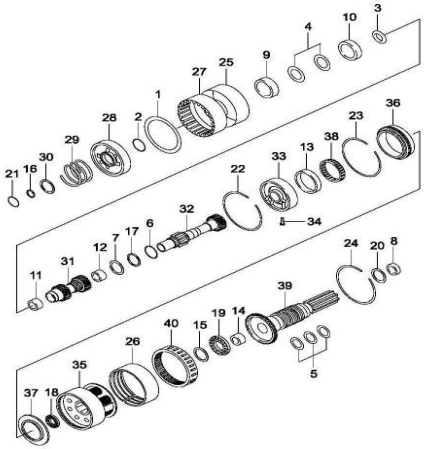

3710 MANUAL SHIFT CONTROL

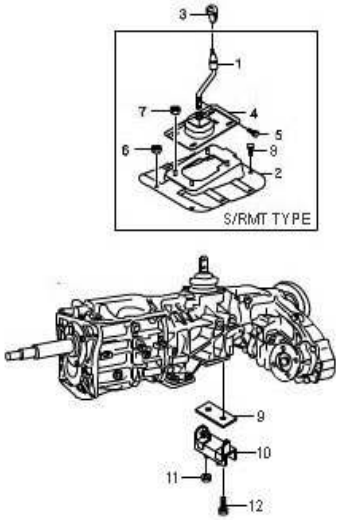

3740 AUTO SHIFT CONTROL

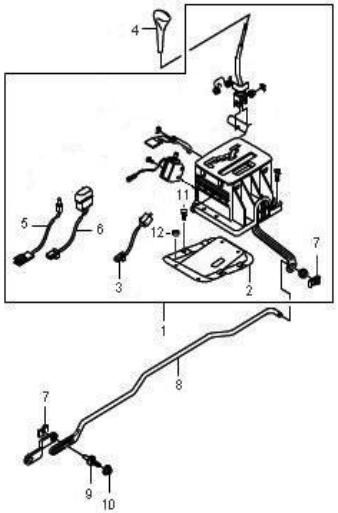

3. TRANSMISSION

3750 AUTO COOLING SYSTEM

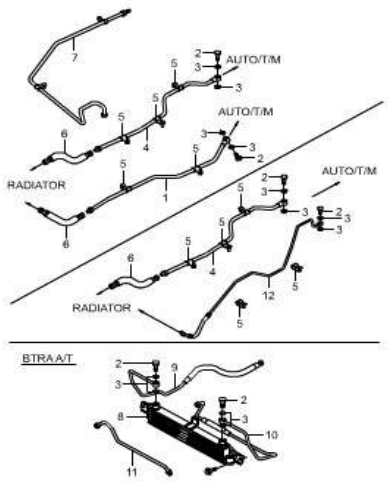

4. CHASSIS

4010 FRAME

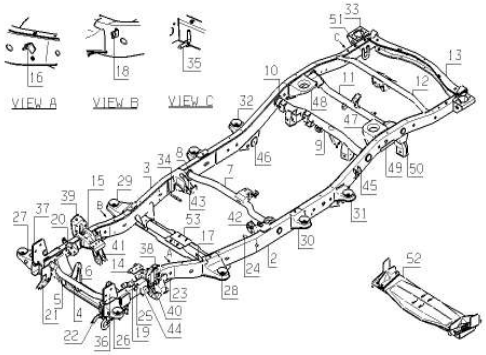

4110 AXLE SHAFT

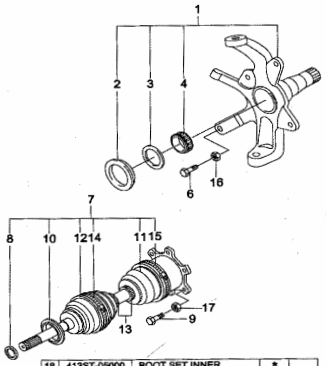

18	413ST-05000	BOOT SET INNER	*	
19	413ST-05010	BOOT SET OUTER		*
		CIRCULAR CIRCLIP	1	1
		SNAP RONG	1	1
11	41331-05000	D.O. J BOOT	1	
12	41332-05000	D.J BOOT		1
14	41334-05000	BOOT CLAMP		1
15	41335-05000	BOOT CLAMP	1	1
13	41333-05000	BOOT CLAMP	1	2
		GREASE PACKAGE		1
		GREASE PACKAGE	1	1

4115 FRONT HUB & DISC

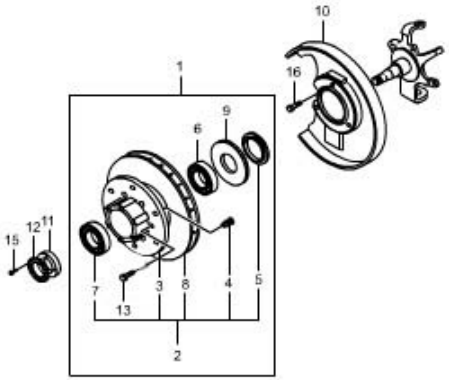

4116 LOCKING HUB

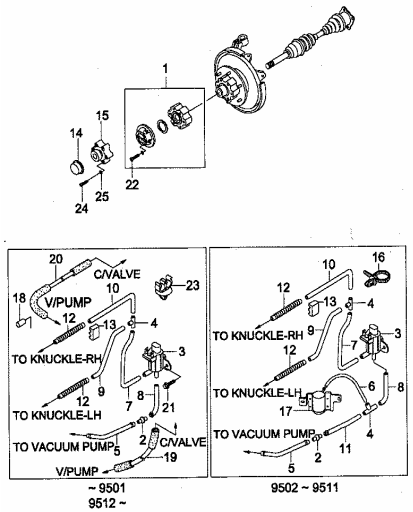

4121 FRONT AXLE

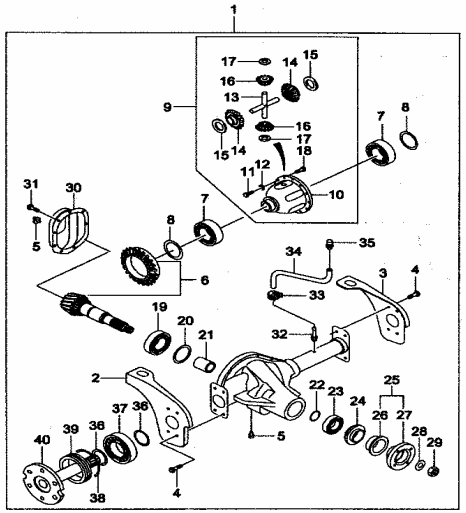

4170 TIRE & WHEEL DISC

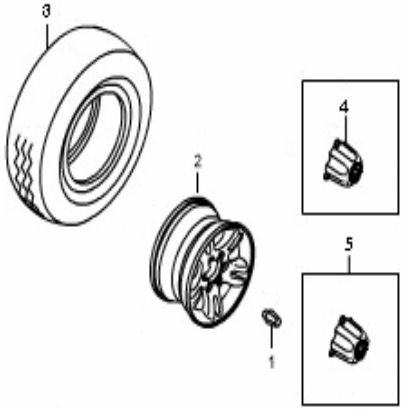

4180 ACCESSORIES TO FRAME

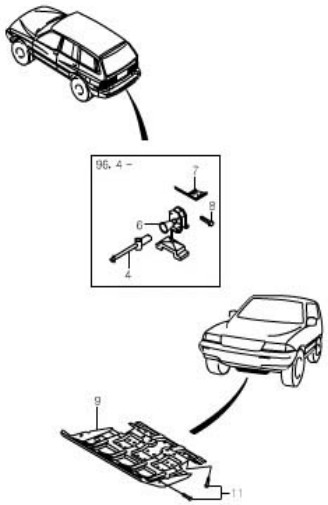

4211 REAR AXLE

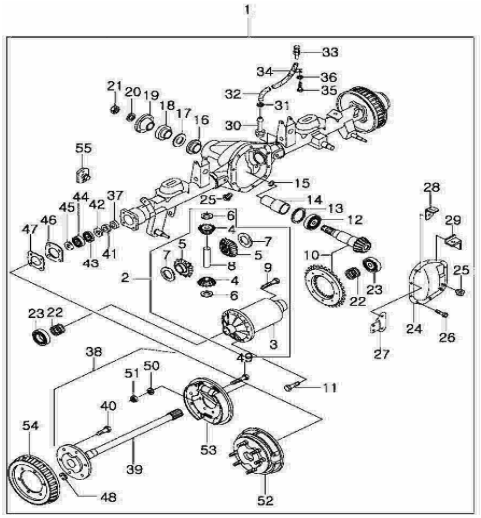

4. CHASSIS

4310 FRONT AXLE MOUNTING

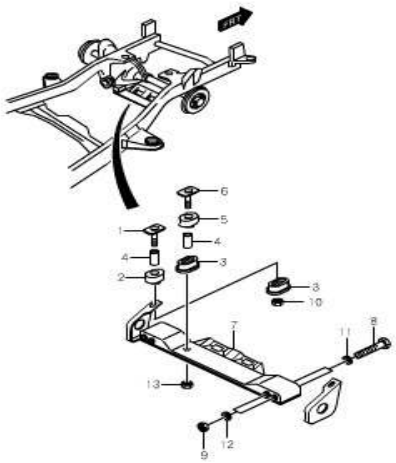

4410 FRONT SUSPENSION

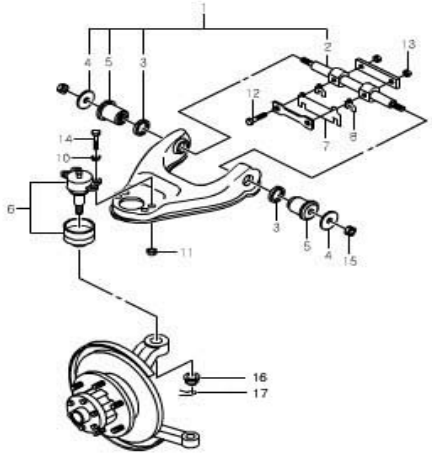

4411 FRONT SHOCK ABSORBER

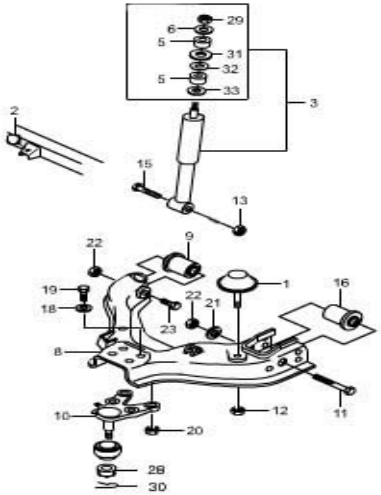

4420 STABILIZER BAR

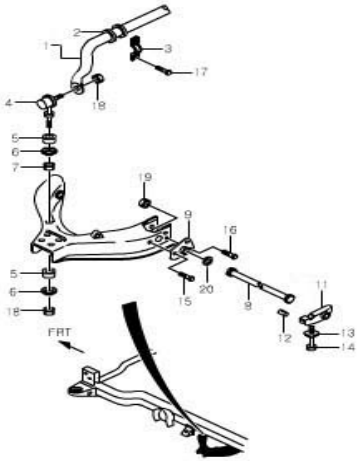

4511 REAR SHOCK ABSORBER

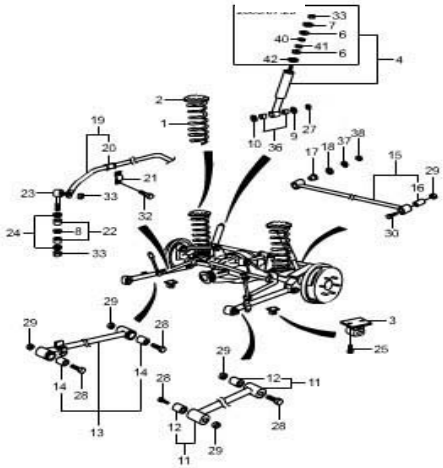

4611 STEERING WHEEL

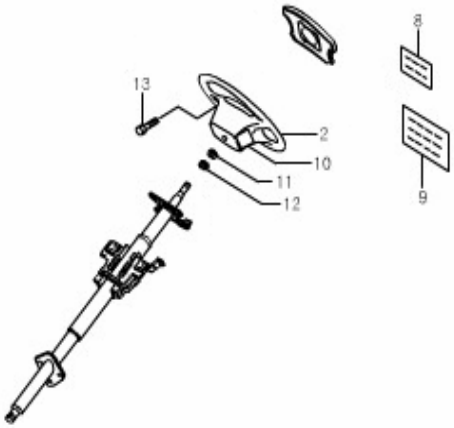

4613 STEERING COLUMN

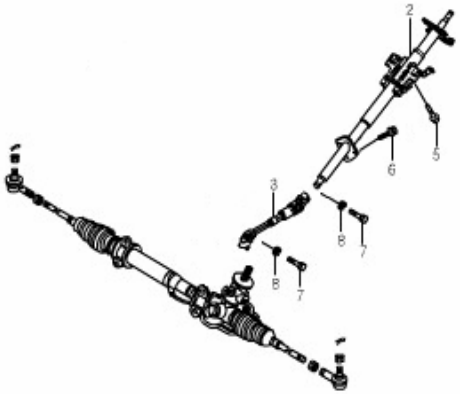

4620 STEERING GEAR LINKAGE

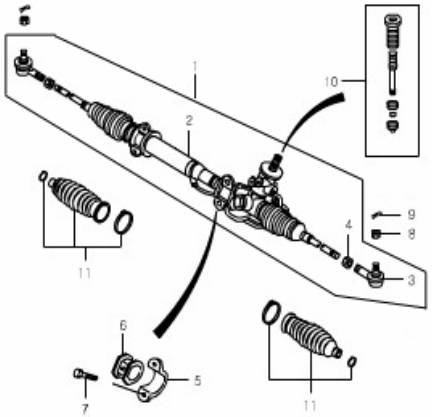

4. CHASSIS

4641 POWER STEERING PIPE LINE

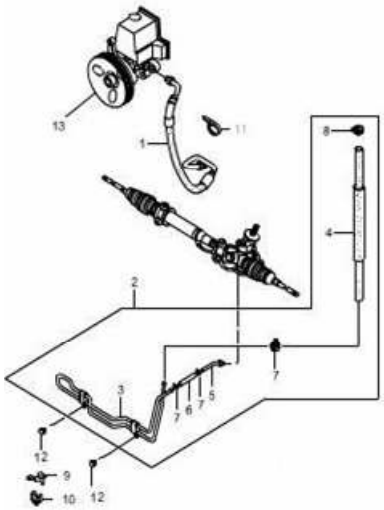

4810 BRAKE PEDAL

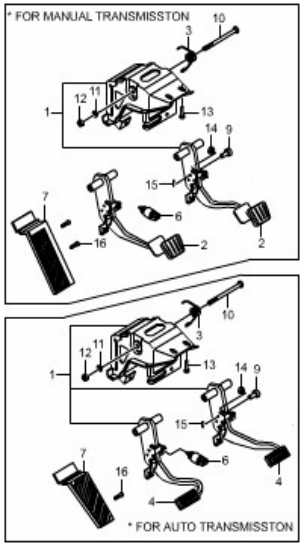

4821 BRAKE PIPE(ABS 5.3)

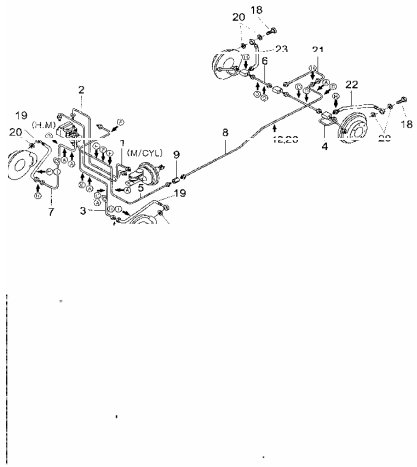

4830 FRONT BRAKE

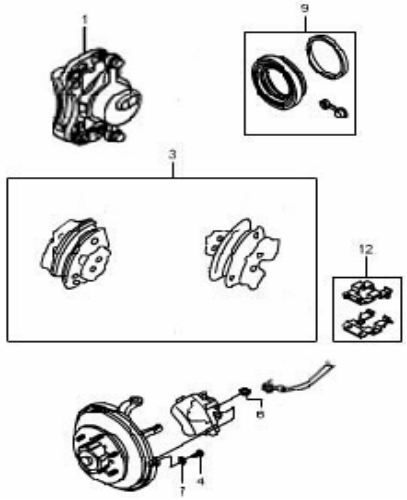

4841 REAR BRAKE(DISC)

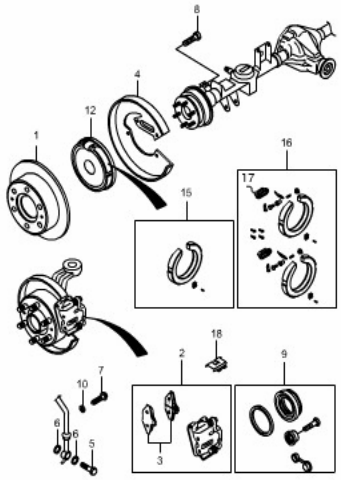

4850 MASTER & BOOSTER CYLINDER(MANDO)

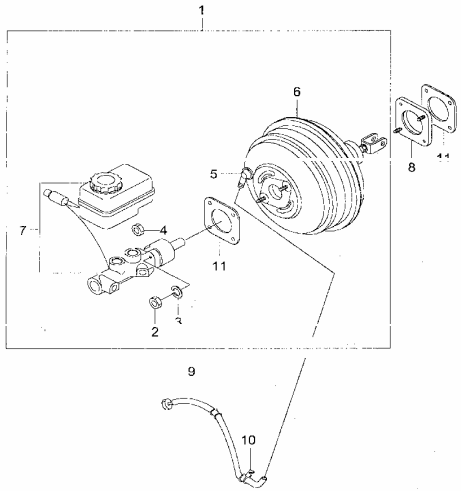

4890 ABS SYSTEM(5.3)

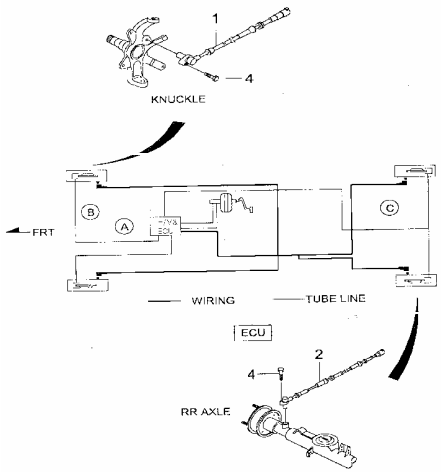

4891 HYDRAULIC MODULATOR(ABS 5.3)

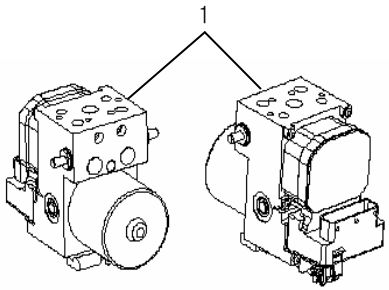

4. CHASSIS

4910 PARKING BRAKE

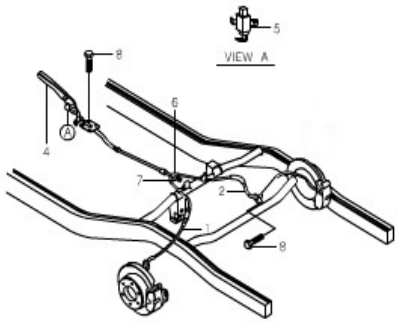

5. BODY

5110 BODY IN WHITE

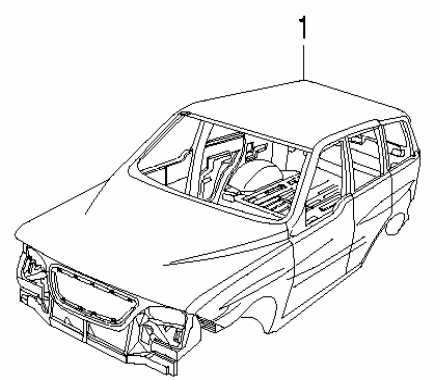

5120 BODY MOUNTING

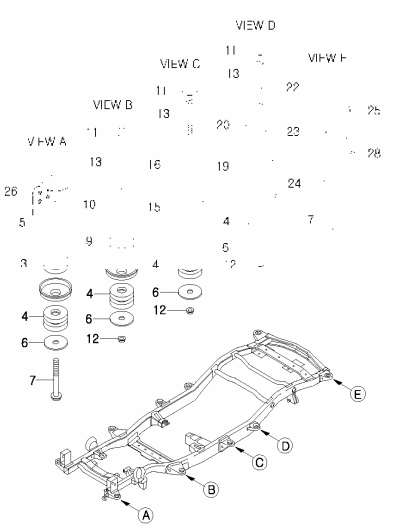

5210 SIDE & REAR BODY

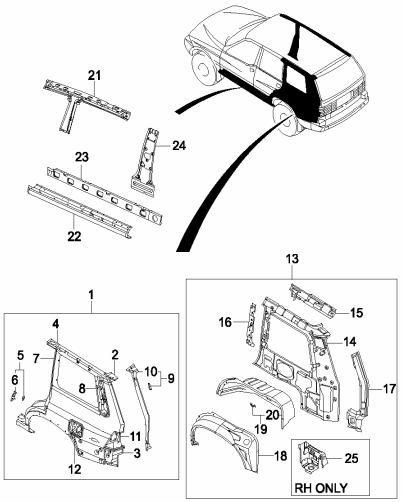

5230 A PILLAR

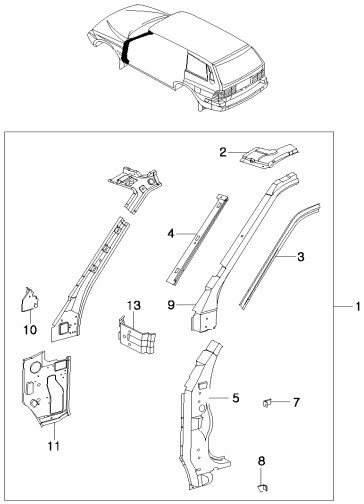

5240 B PILLAR

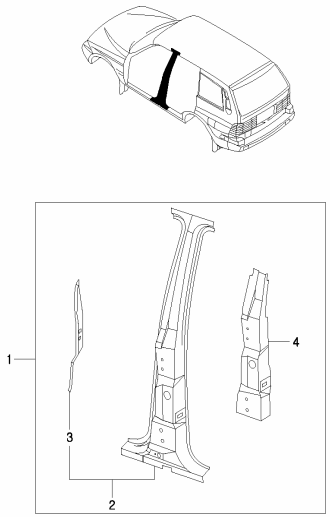

5510 ROOF PANEL

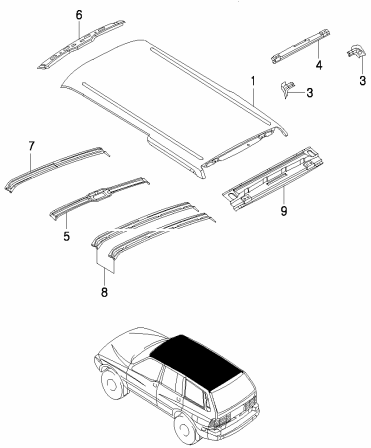

5610 FRONT FLOOR PANEL

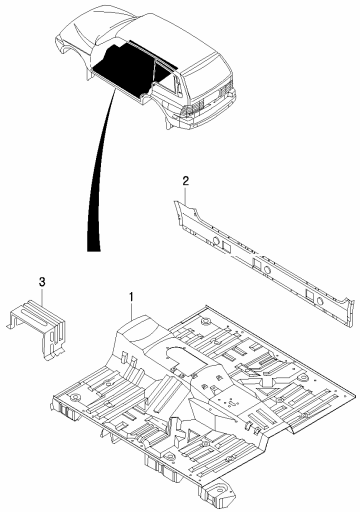

5620 REAR FLOOR PANEL

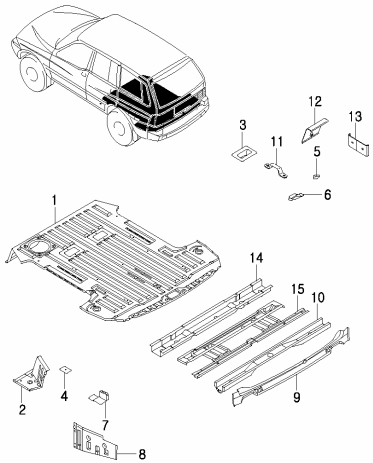

5. BODY

5710 FRONT PANEL

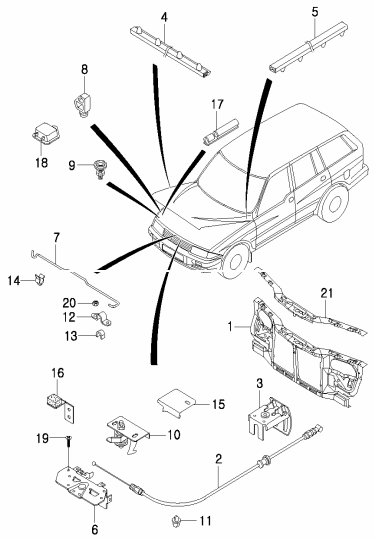

5720 FENDER & APRON PANEL

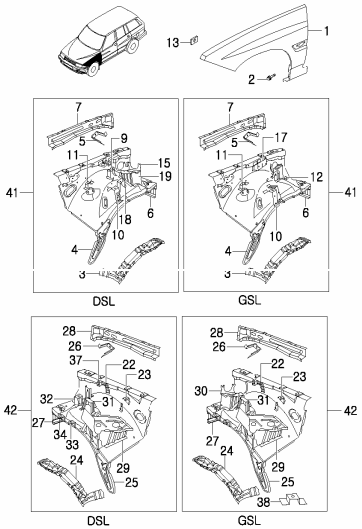

5730 DASH PANEL & COWL

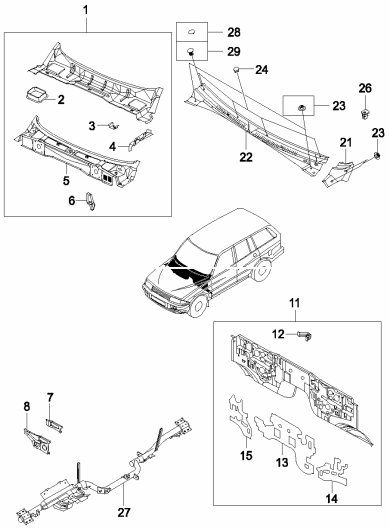

6. BODY HANGON PARTS

6110 HOOD PANEL

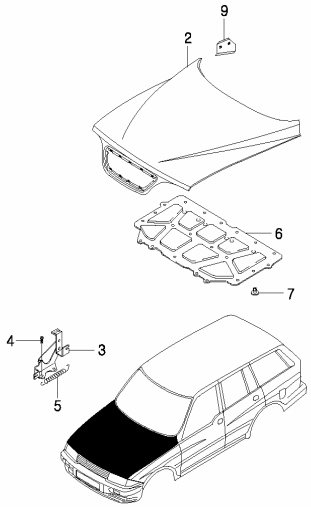

6210 FRONT DOOR PANEL

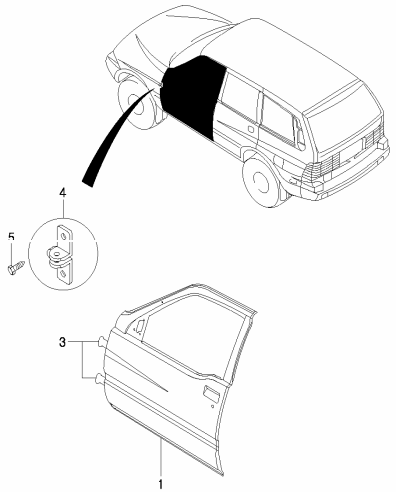

6310 REAR DOOR PANEL

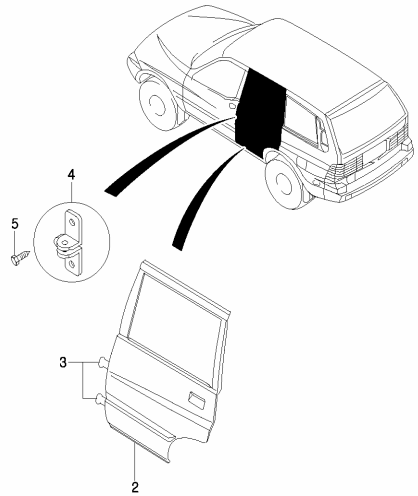

6410 TAIL GATE PANEL

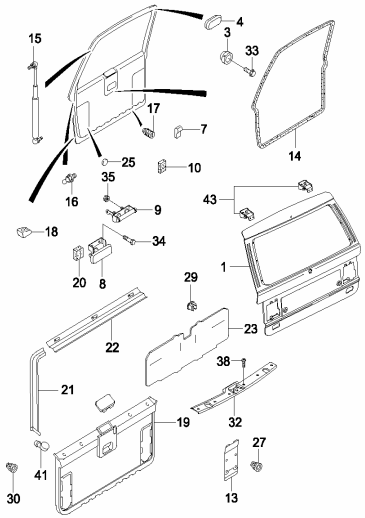

6810 AIR CONDITIONER KIT

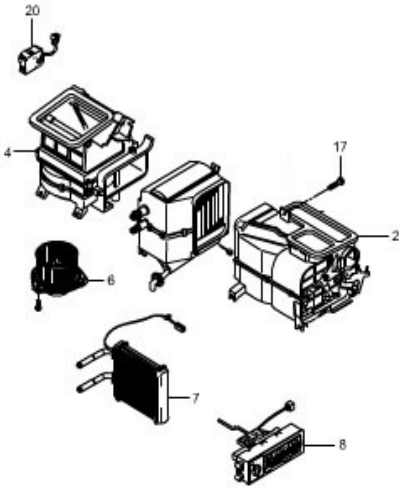

6820 AIR CONDITIONER HOSE & PIPE LINE

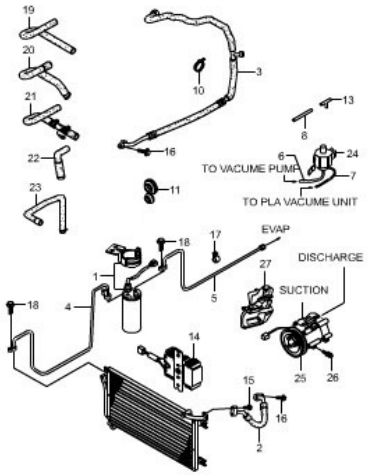

6830 AIR DISTRIBUTOR

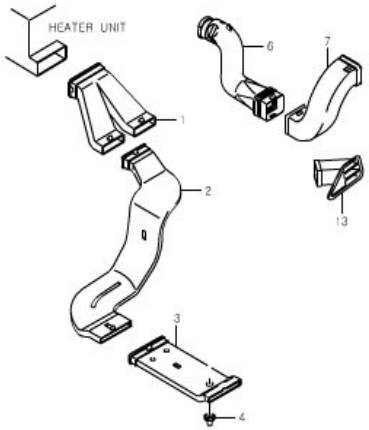

6840 EVAPORATOR

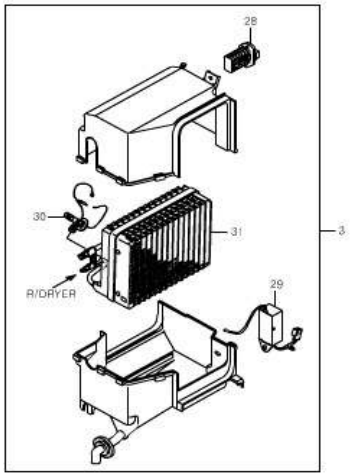

6. BODY HANGON PARTS

6850 CONDENSER

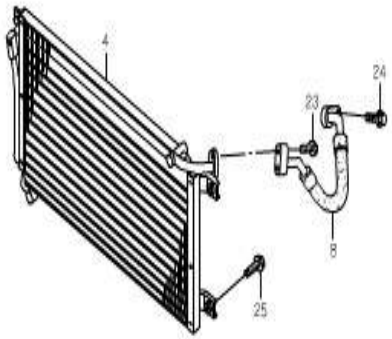

7. INTERIOR & EXTERIOR

7010 KEY SET

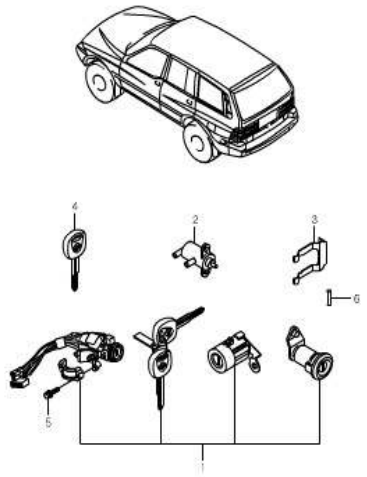

7090 FUEL FILLER DOOR LOCK

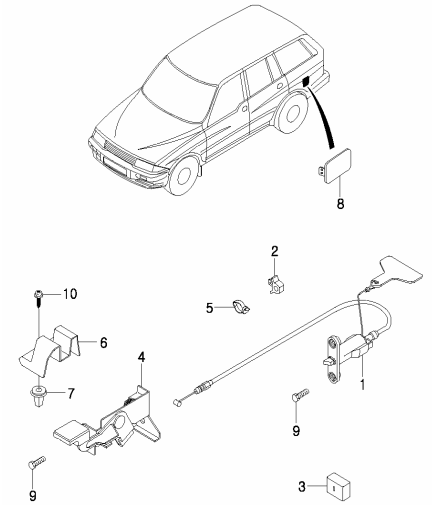

7110 FRONT DOOR OPENING SYSTEM

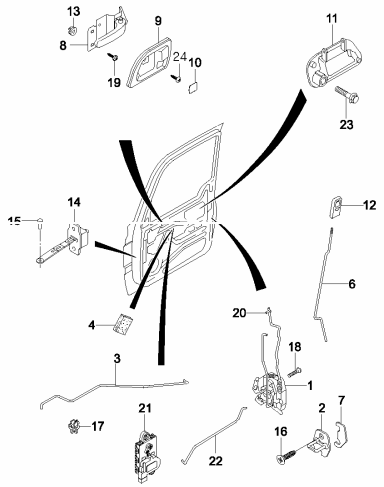

7115 FRONT DOOR TRIM

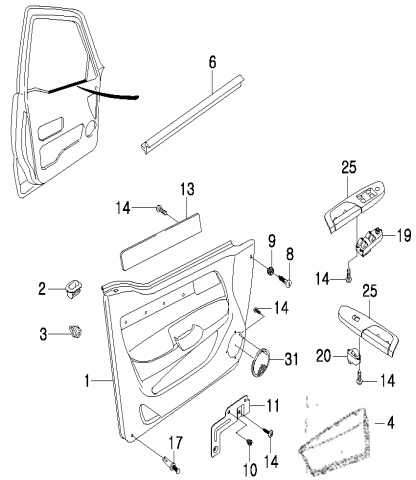

7120 FRONT WINDOW LIFTER

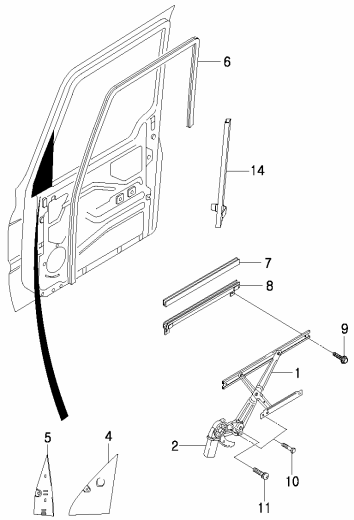

7121 FRONT WEATHER STRIP

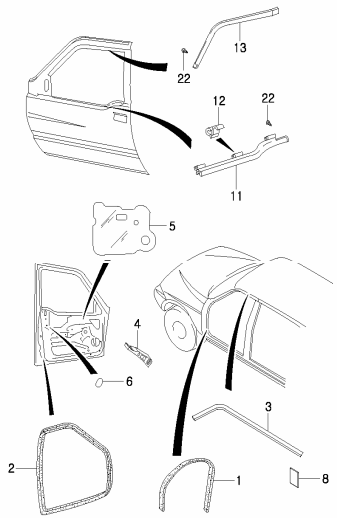

7210 REAR DOOR OPENING SYSTEM

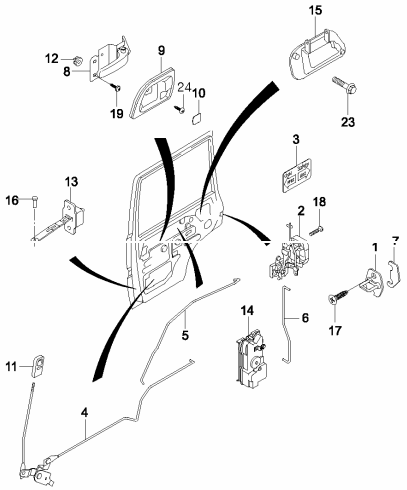

7215 REAR DOOR TRIM

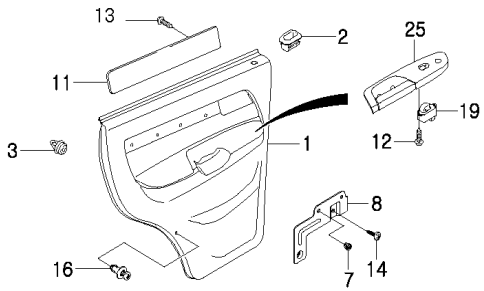

7. INTERIOR & EXTERIOR

7220 REAR WINDOW LIFTER

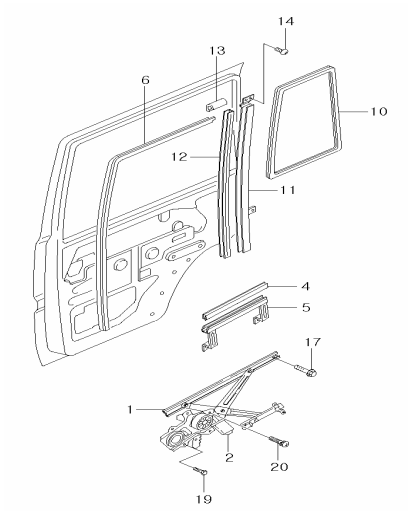

7221 REAR WEATHER STRIP

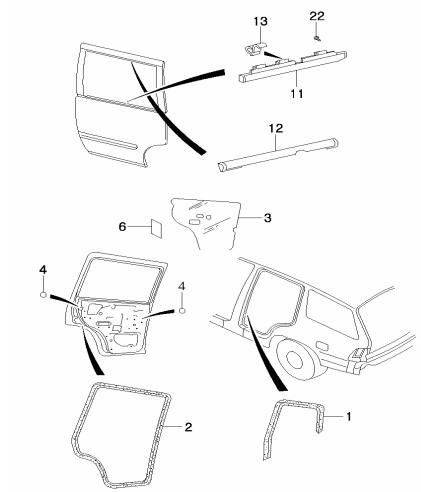

7310 TAIL GATE LOCK

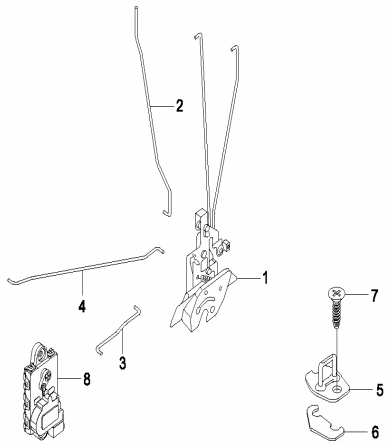

7330 HEADLINING

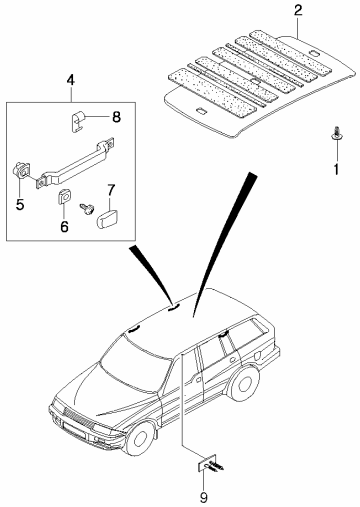

7410 FRONT SEAT

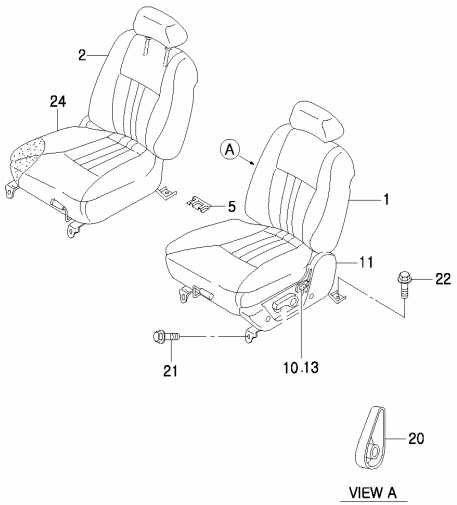

7420 FRONT SEAT PARTS

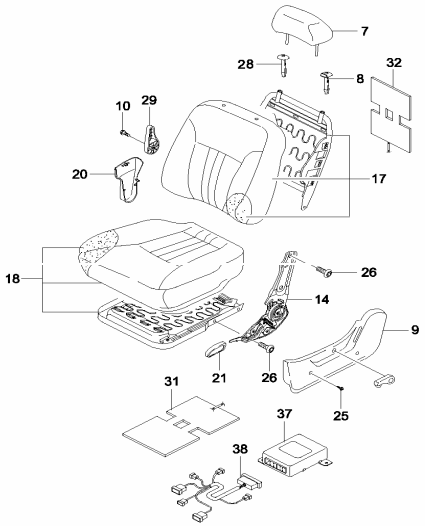

7430 FRONT SEAT BELT

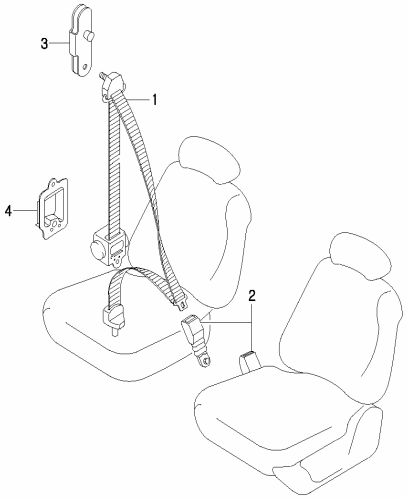

7440 SEAT GUIDE RAIL

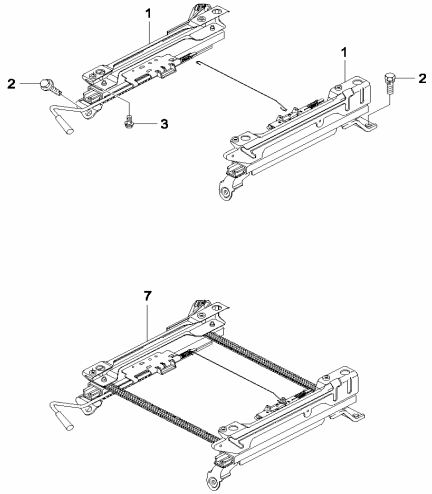

7. INTERIOR & EXTERIOR

7510 REAR SEAT

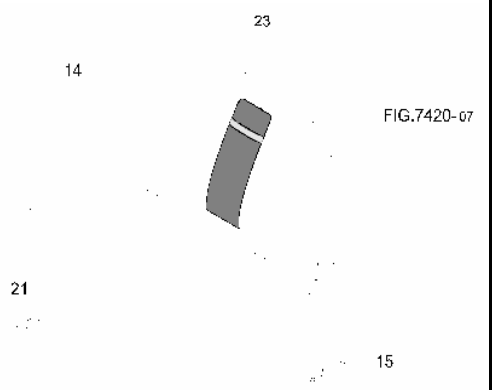

7520 REAR SEAT PARTS

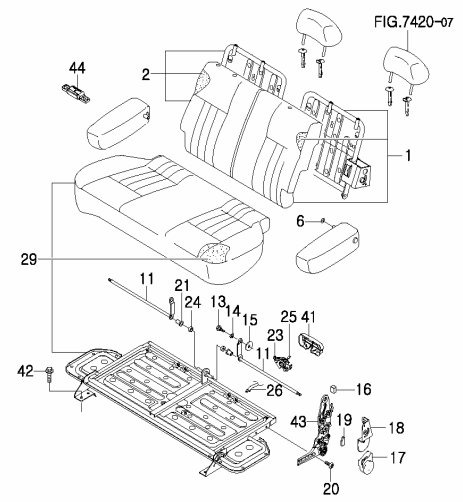

7530 REAR SEAT BELT

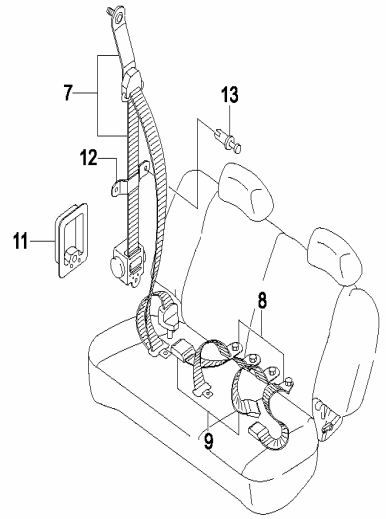

7610 INSTRUMENT PANEL

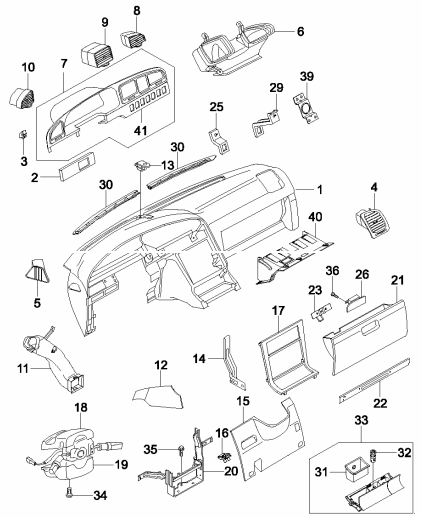

7630 CONSOLE

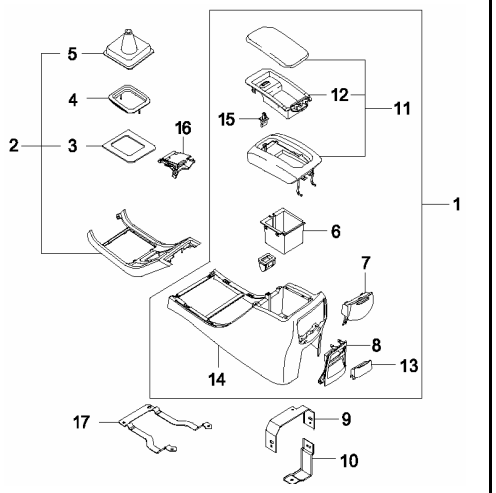

7720 FRONT FLOOR CARPET

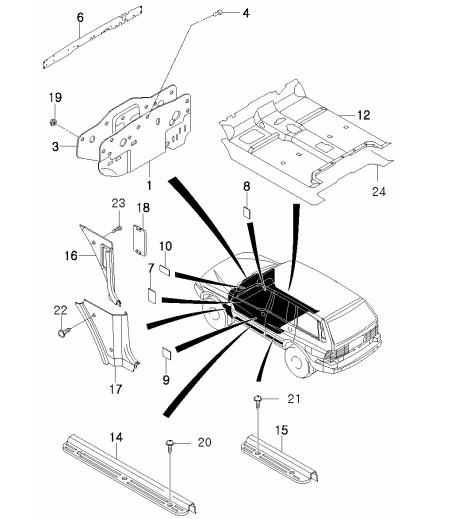

7730 PILLAR TRIM

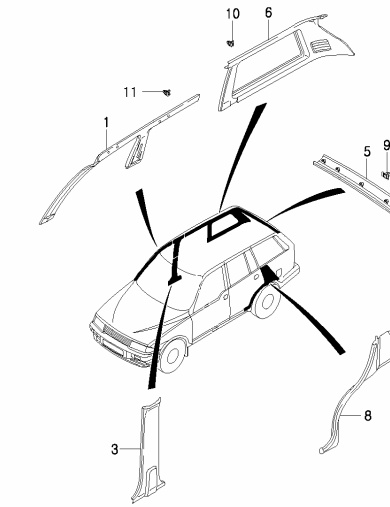

7740 LUGGAGE TRIM

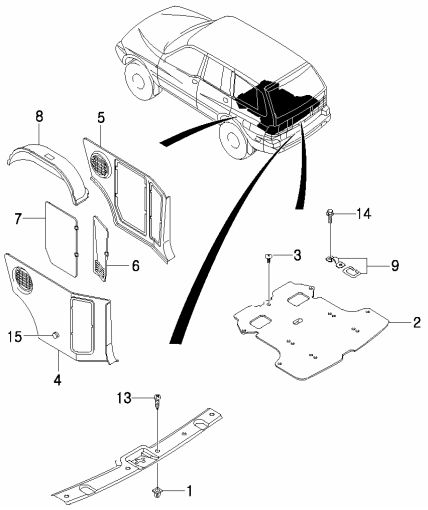

7. INTERIOR & EXTERIOR

7770 SUNSHADE & INSIDE MIRROR

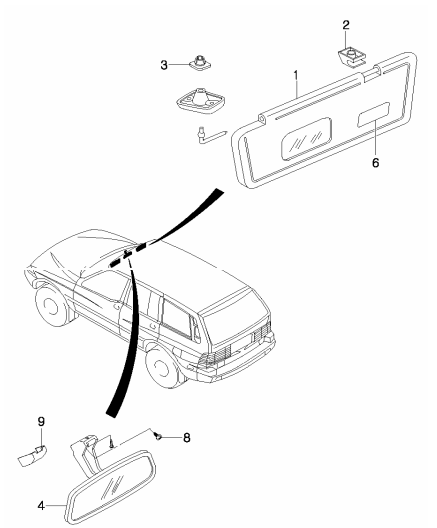

7810 WINDSHIELD WIPER

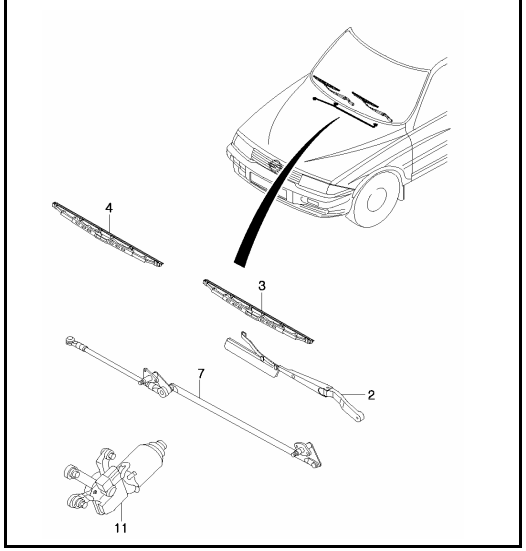

7820 WINDSHIELD WASHER

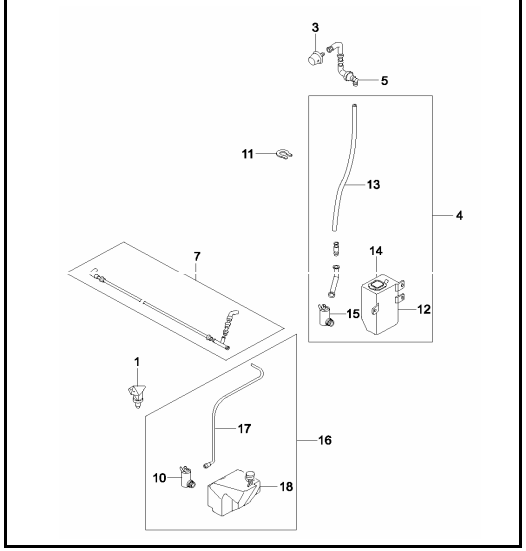

7830 REAR WINDOW WIPER

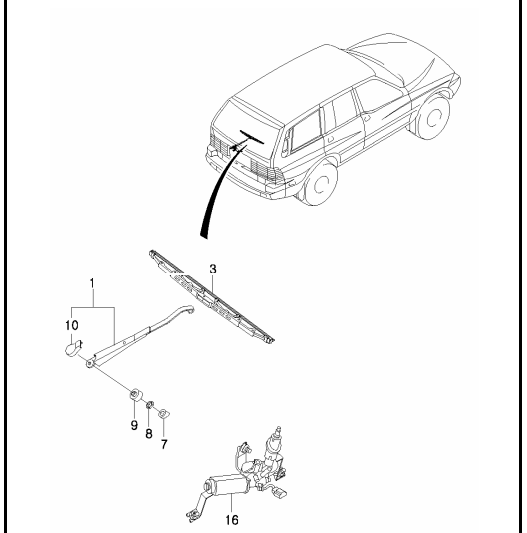

7840 GLASS

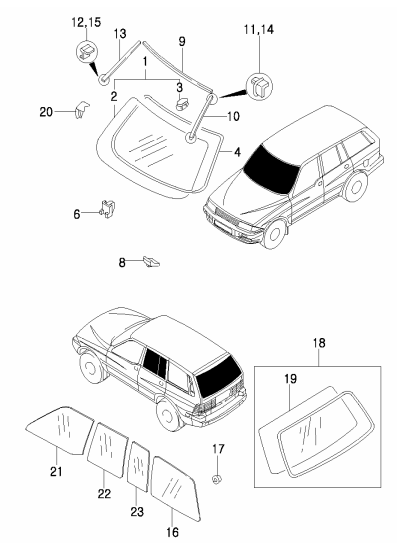

7850 OUTSIDE MIRROR

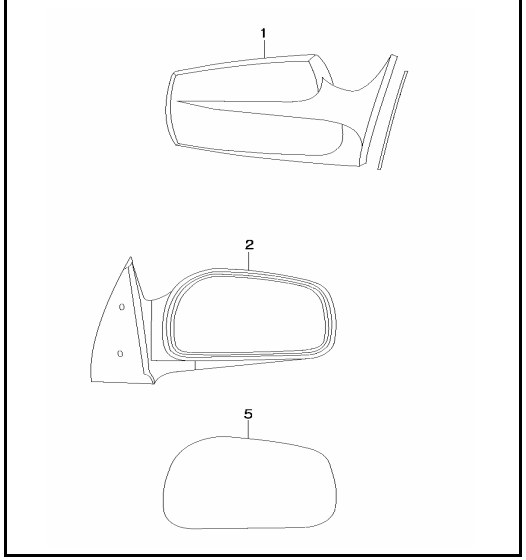

7870 FRONT BUMPER

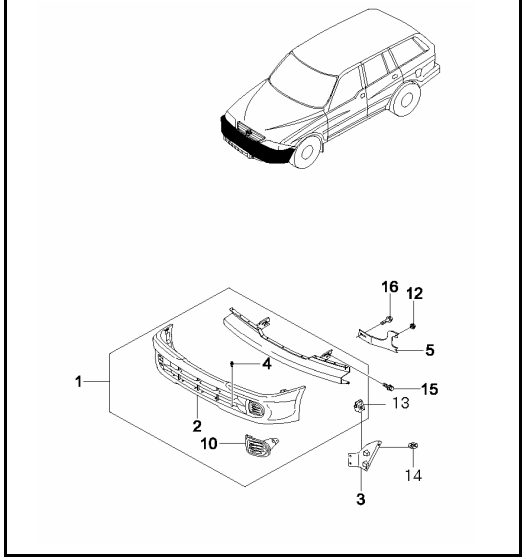

7880 REAR BUMPER

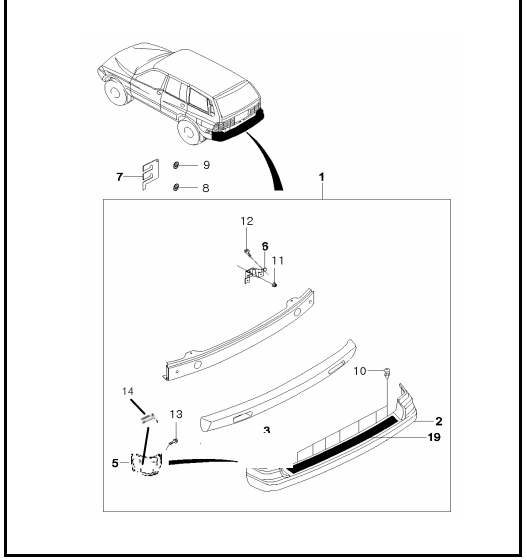

7. INTERIOR & EXTERIOR

7910 RADIATOR GRILLE

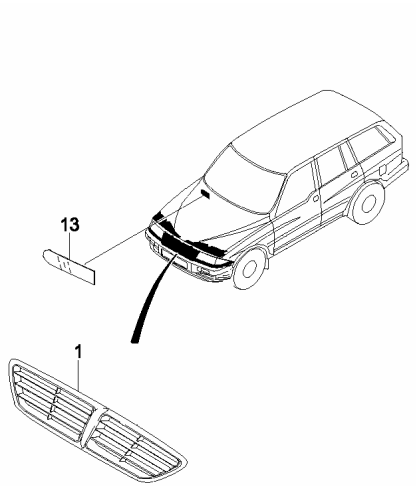

7920 MUD GUARD

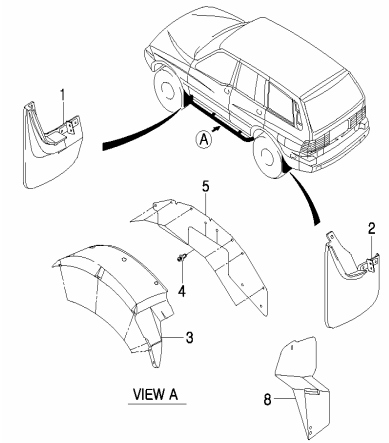

7930 SIDE BODY MOULDING

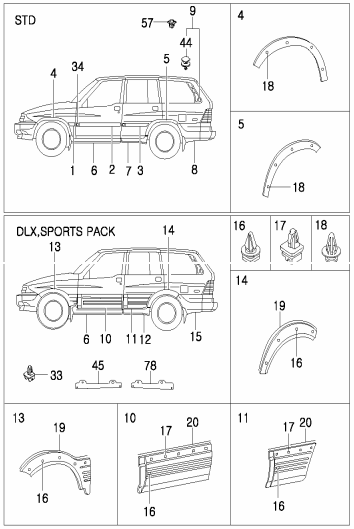

7940 REAR BODY MOULDING

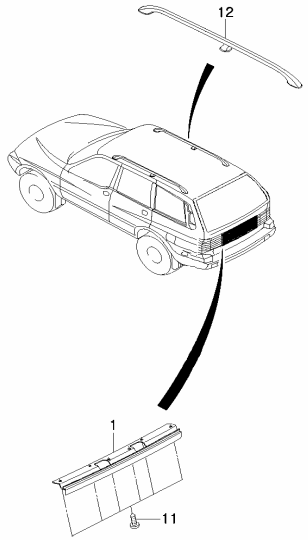

7950 EMBLEM & LETTERING

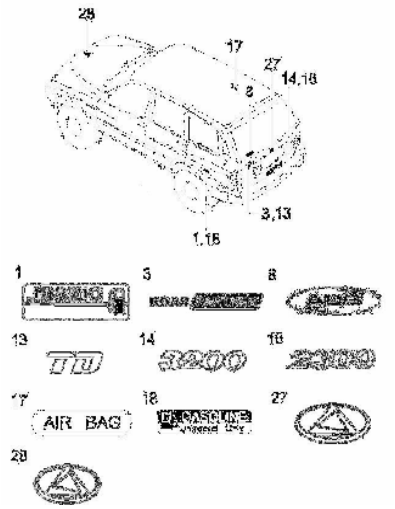

8. ELECTRICAL EQUIPMENTS

8010 INSTRUMENT CLUSTER

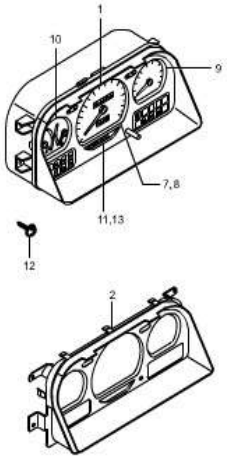

8210 WIRING

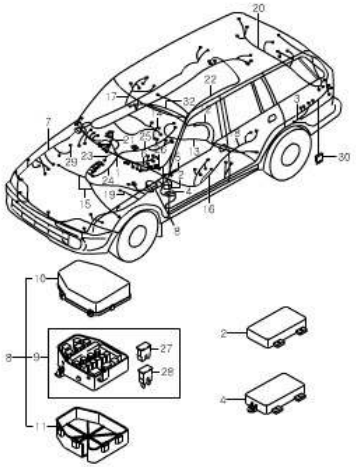

8310 FRONT LAMP

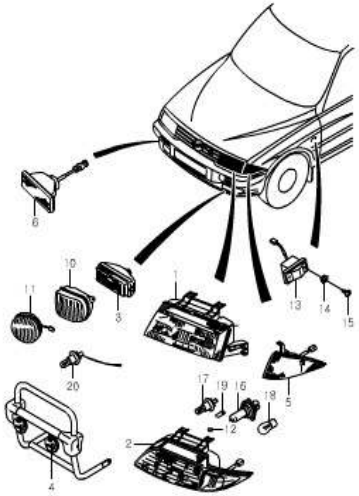

8320 REAR LAMP

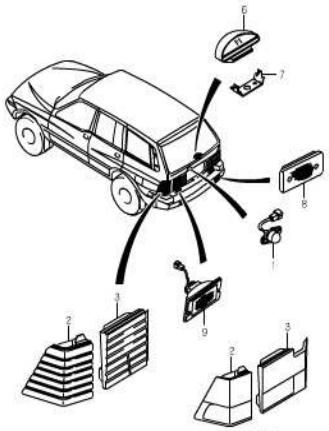

8410 FUSE & RELAY

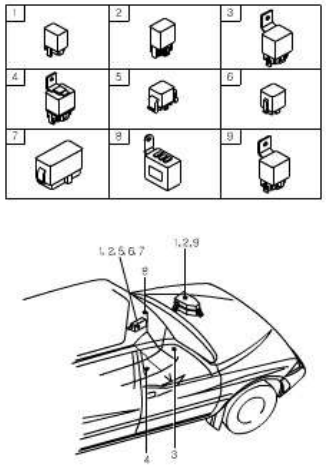

8510 SWITCH

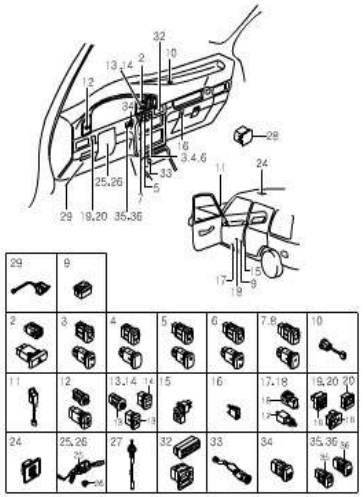

8610 ELECTRICAL PARTS

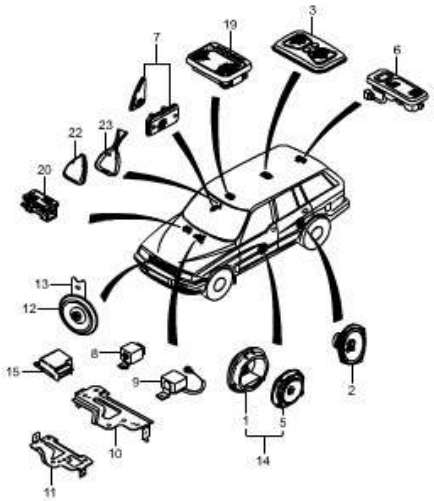

8810 AIR BAG SYSTEM

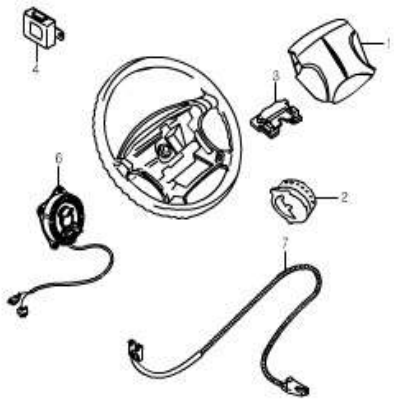

8. ELECTRICAL EQUIPMENTS

8910 AUDIO SYSTEM

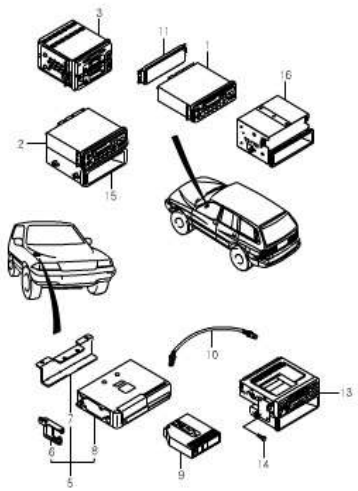

8920 ANTENNA

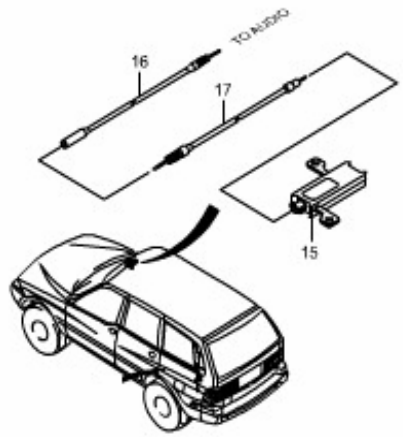

9. O.V.M. & ACCESSORY

9110 JACK A & OVM TOOL

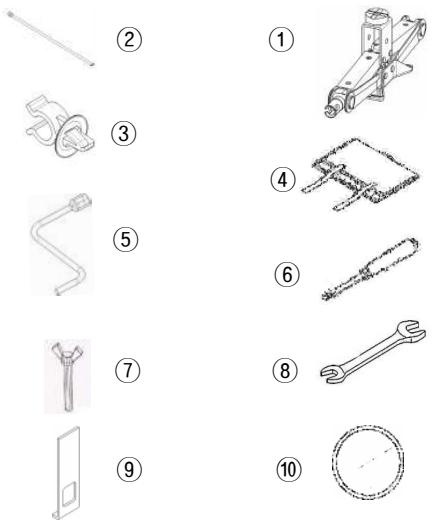

9210 OIL & ANTI FREEZE

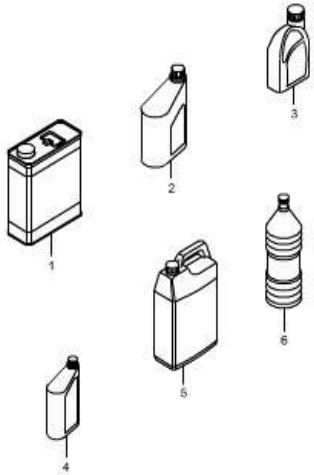

1 ENGINE

1112	ENGINE UNIT - G23D
1113	ENGINE UNIT - G32D
1123	CYLINDER BLOCK-G23D
1124	CYLINDER BLOCK-G32D
1130	CRANKSHAFT & FLYWHEEL
1211	CYLINDER HEAD & GASKET KIT
1221	CYLINDER HEAD COVER & CAMSHAFT
1311	CHAIN DRIVE
1331	TIMING CASE - G23D
1332	TIMING CASE - G32D
1350	BELT SYSTEM
1411	ENGINE WIRING
1430	SENSOR
1440	IGNITION COIL - G23D
1441	IGNITION COIL - G32D
1452	ALTERNATOR
1453	ALTERNATOR MOUNTING
1462	STATING MOTOR
1490	EMISSION MODULE
1521	COOLING SYSTEM - G23D
1522	COOLING SYSTEM - G32D
1531	OIL PAN & PUMP - G23D
1532	OIL PAN & PUMP - G32D
1541	OIL FILTER - G23D
1542	OIL FILTER - G32D
1623	VACUUM SYSTEM - G23D
1624	VACUUM SYSTEM - G32D
1712	INTAKE MANIFOLD - G23D
1713	INTAKE MANIFOLD - G32D
1722	EXHAUST MANIFOLD - G23D
1723	EXHAUST MANIFOLD - G32D
1842	INJECTION CONTROL SYSTEM-G23D
1843	INJECTION CONTROL SYSTEM-G32D
1990	ENGINE MOUNTING

1112

ENGINE UNIT - G23D

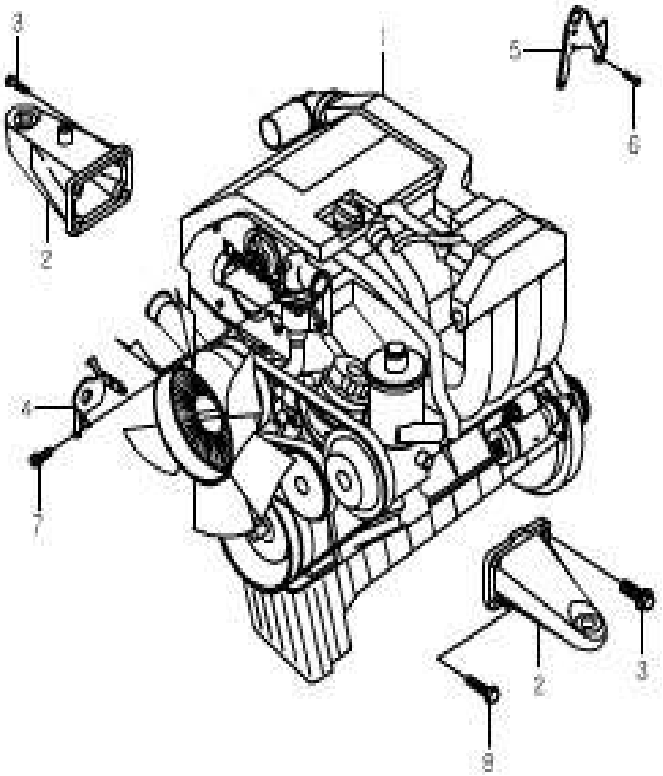

KEY NO.		PART NAME										
			ENGINE							APPLICATION		
ITC	PART NO.	T/M	G23D	G32D			OPTION	L/R	Q'TY	FROM	TO	REMARK
	[01]		ENGINE ASSY									
	G23K-210	M	S				ENGINE A-COMP		1			161 010 80 00
	161 010 81 00	A	S				ENGINE A-COMP		1			
	[02]		BRACKET-ENGINE MOUNTING									
	161 223 35 04		S					LH	1			
	161 223 43 04		S					RH	1			
	[03]		BOLT									
	914005 008008		S						8			M8X30 8.8 L8451.21
	[04]		BRACKET-ENGINE HANGER FRT									
	161 220 31 41		S						1			
	[05]		BRACKET-ENGINE HANGER RR									
	161 223 36 41		S						1			
	[06]		BOLT									
	000933 008214		S						2			M8X16 8.8 DBL8451.21
	[07]		BOLT									
	914005 008015		S						1			M8X35 8.8 L8451.21
	914010 008033		S						1			M8X75 N14010-8
	[08]		BOLT									
	914005 008020		S						2			M8X50 8.8 L8451.21

1113

ENGINE UNIT - G32D

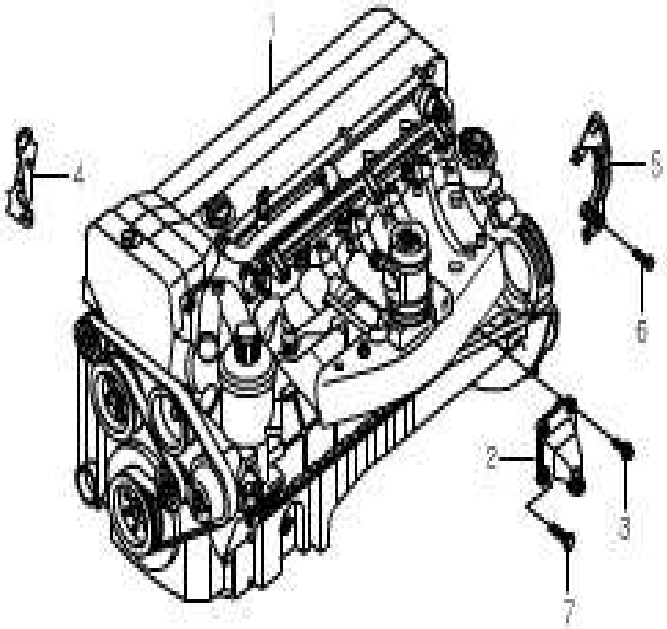

KEY NO.		PART NAME										
			ENGINE							APPLICATION		
ITC	PART NO.	T/M	G23D	G32D			OPTION	L/R	Q'TY	FROM	TO	REMARK
	[01]		ENGINE ASSY									
	G32K-211		S				ENGINE A-COMP		1			
	[02]		BRKT-ENG MTG									
	161 223 35 04		S					L	1			
	161 223 43 04		S					R	1			
	[03]		BOLT-COMB									
	914005 008008		S						6			M8X30 8.8 L8451.21
	[04]		BRACKET-ENG HANGER FRT									
	162 223 32 41		S						1			
	[05]		BRKT ASSY-ENG.HANGER,RR									
	162 220 33 41		S						1			
	[06]		BOLT									
	000912 008009		S						2			M8X20 DBL8451.21
	[07]		BOLT									
	914005 008020		S						2			M8X50 8.8 L8451.21

1123

CYLINDER BLOCK-G23D

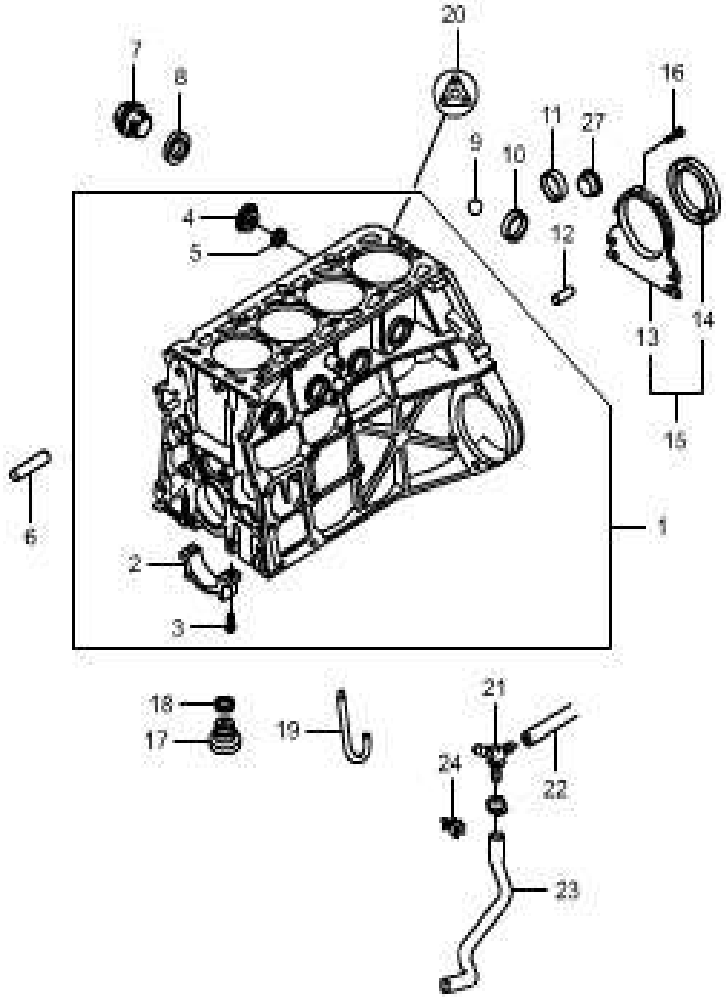

KEY NO.		PART NAME										
			ENGINE							APPLICATION		
ITC	PART NO.	T/M	G23D	G32D			OPTION	L/R	Q'TY	FROM	TO	REMARK
	[01]		BLOCK ASSY-CYLINDER									
	161 010 34 08		S						1			
	[02]		CAP-CRANKSHAFT BEARING									
	102 011 04 11		S						4			MAIN
	661 011 30 13		S						1			TRUST
	[03]		BOLT									
	661 011 31 71		S						10			
	[04]		PLUG-SCREW									
	662 997 31 72		S						1			
	[05]		RING-O									
	006 997 75 48		S						1			
	[06]		PIN-SPRING									
	601 992 03 25		S						4			
	[07]		SCREW									
	662 997 30 72		S						1			
	[08]		SEAL-RING									
	007603 018100		S						1			A18X22-AL
	[09]		BALL									
	661 991 32 29		S						1			15.08mm

1123

CYLINDER BLOCK-G23D

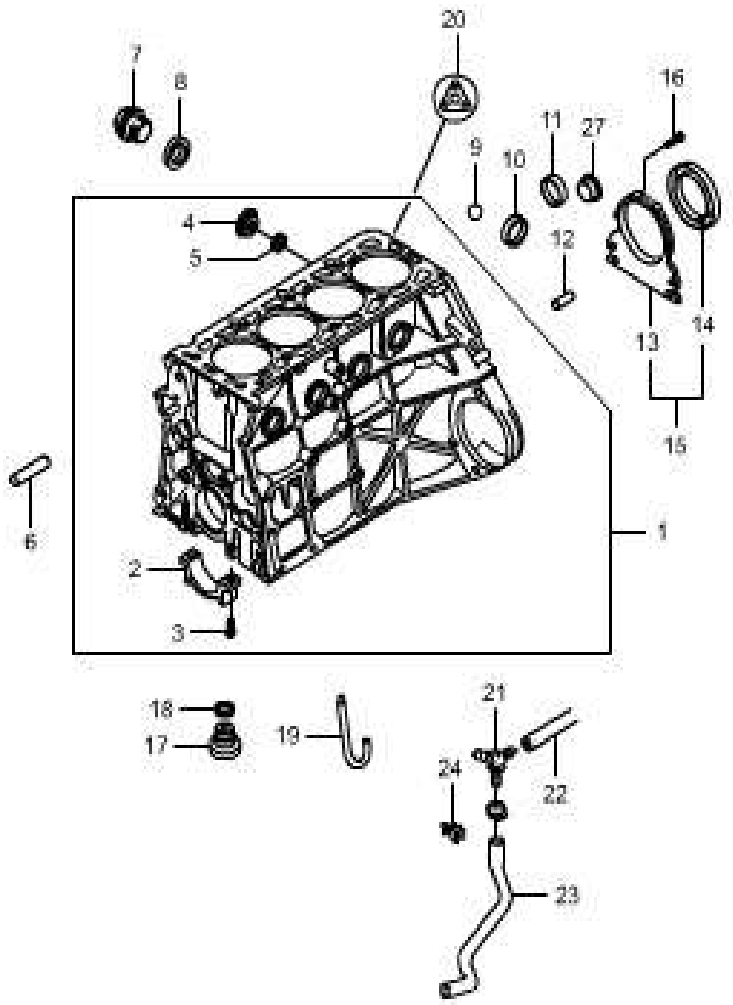

KEY NO.		PART NAME										
			ENGINE							APPLICATION		
ITC	PART NO.	T/M	G23D	G32D			OPTION	L/R	Q'TY	FROM	TO	REMARK
	[10] 000443 011001		PLUG-EXPANSION S						7			
	[11] 000443 020004		PLUG-EXPANSION S						1			A20 DBL8451.11
	[12] 601 992 01 25		PIN-SPRING S						2			
	[13] 661 011 30 08		COVER-CRK/SHT SEALING,RR S						1			
	[14] 661 997 31 47		SEALING-CRANK SHAFT RR S						1			
	[15] 661 010 30 14		COVER ASSY-CRK/SHT SEALING,RR S						1			
	[16] 914145 006401		BOLT-COMB. S						6			M6X20 8.8 L8451.21
	[17] 104 180 04 32		VALVE ASSY-REVERSE S						1			
	[18] 017 997 22 48		O-RING S						1			

1123

CYLINDER BLOCK-G23D

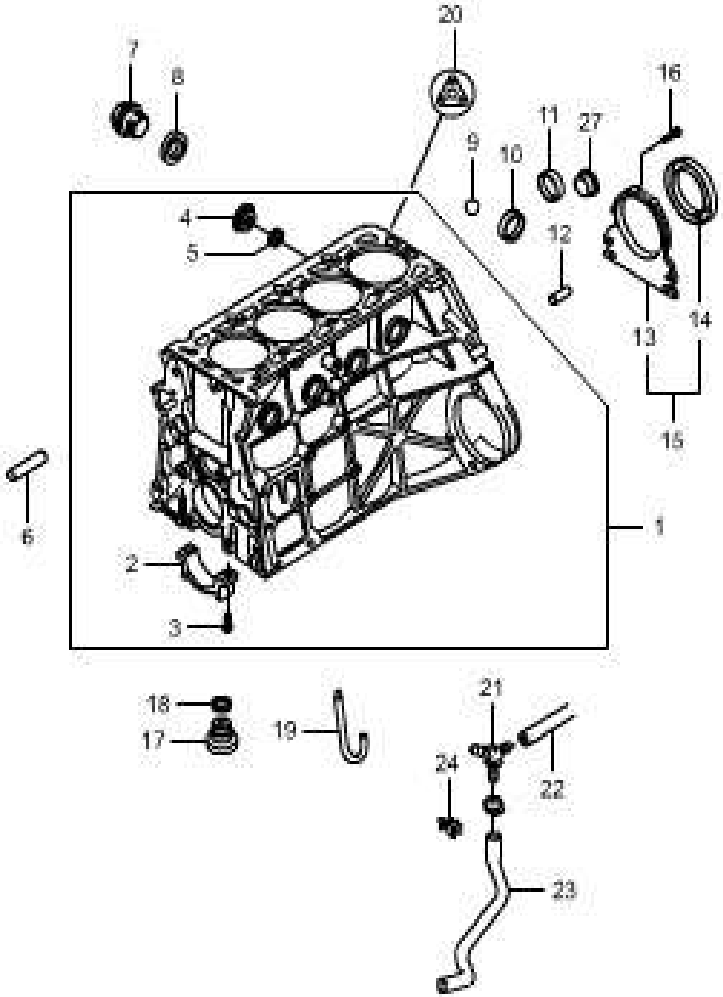

KEY NO.		PART NAME										
			ENGINE							APPLICATION		
ITC	PART NO.	T/M	G23D	G32D			OPTION	L/R	Q'TY	FROM	TO	REMARK
	[19] 161 014 32 77		TUBE-OIL DRAIN S						1			
	[20] 111 010 31 08		GASKET KIT-CYLINDER BLOCK S						1			
	[21] 111 018 02 70		CONNECTOR S						1			
	[22] 111 094 00 82		HOSE S						2			
	[23] 111 010 02 82		HOSE ASSY-VENTILATION S						1			
	[24] 111 018 00 40		CLAMP S						1			

1124

CYLINDER BLOCK-G32D

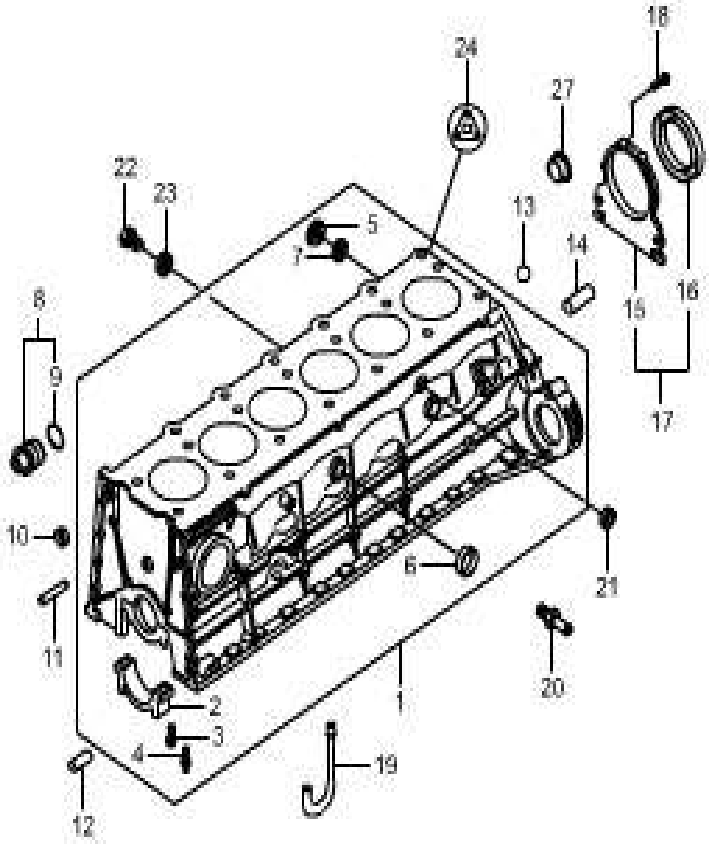

KEY NO. ITC	PART NO.	T/M	ENGINE G23D	ENGINE G32D			OPTION	L/R	Q'TY	APPLICATION FROM	APPLICATION TO	REMARK
	[1]		BLOCK ASSY-CYL.MECH									
	162 010 35 08		S						1			
	[02]		CAP-CRANKSHAFT BEARING									
	102 011 04 11		S						6			MAIN
	661 011 30 13		S						1			THRUST
	[03]		BOLT									
	661 011 31 71		S						10			
	[04]		BOLT									
	661 011 32 71		S						12			
	[05]		PLUG-SCREWED									
	117 997 02 30		S						1			
	[06]		PLUG-EXPANSION									
	000443 014001		S						7			
	[07]		RING-O									
	006 997 75 48		S						1			
	[08]		VALVE ASSY-REVERSE									
	104 180 04 32		S						1			
	[09]		RING-O									
	017 997 22 48		S						1			

1124

CYLINDER BLOCK-G32D

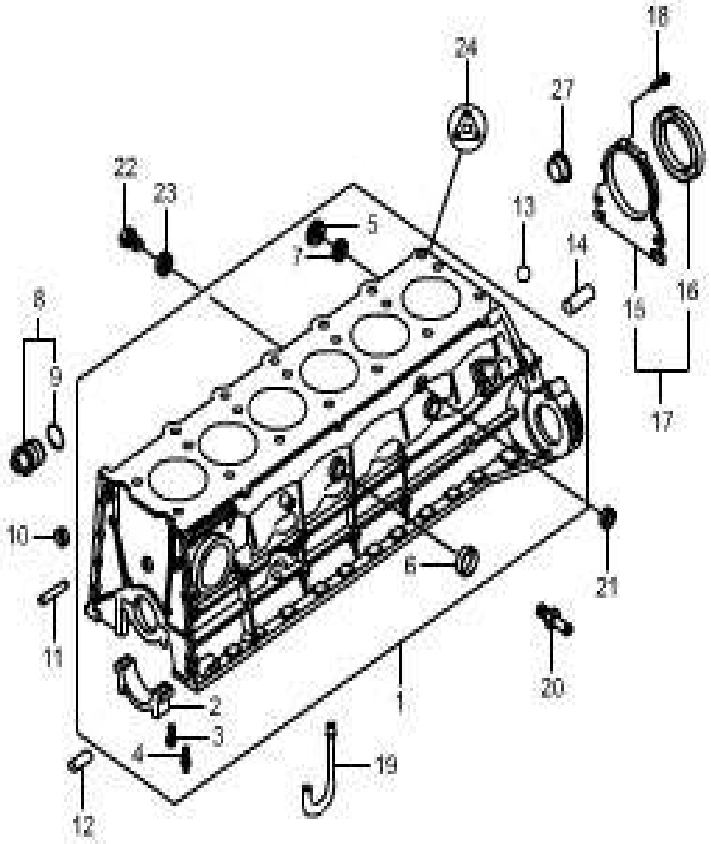

KEY NO. ITC	PART NO.	T/M	ENGINE G23D	ENGINE G32D	ENGINE	ENGINE	OPTION	L/R	Q'TY	APPLICATION FROM	APPLICATION TO	REMARK
	[10] 000443 017000		PLUG-EXPANSION S						1			A17 DBL8400.00
	[11] 104 187 00 36		NOZZLE-OIL PUMP CHAIN LUBG. S						1			
	[12] 601 992 03 25		PIN-SPRING S						4			
	[13] 661 991 32 29		BALL S						1			15mm
	661 991 33 29		S						1			6.35mm
	[14] 601 992 01 25		PIN-SPRING S						2			
	[15] 661 011 30 08		COVER-CRK/SHT SEALING,RR S						1			
	[16] 661 997 31 47		SEALING-CRANK SHAFT RR S						1			
	[17] 661 010 30 14		COVER ASSY-CRK/SHT SEALING,RR S						1			
	[18] 914005 006005		BOLT-COMB. S						6			M6X20 8.8 L8451.21

1124

CYLINDER BLOCK-G32D

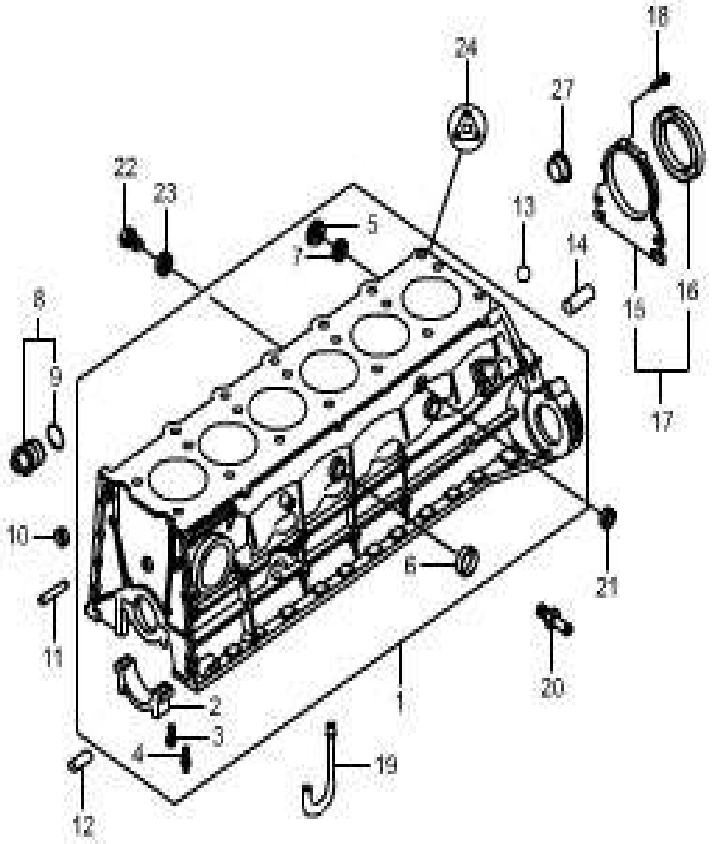

KEY NO.		PART NAME										
ITC	PART NO.	T/M	ENGINE G23D	ENGINE G32D	ENGINE	ENGINE	OPTION	L/R	Q'TY	APPLICATION FROM	APPLICATION TO	REMARK
	[19] 162 014 30 77		TUBE-OIL DRAIN S						1			
	[20] 103 997 00 72		BOLT-CONNECTING S						1			
	[21] 007603 022100		SEAL RING S						1			A22X27-AL
	[22] 662 997 31 72		PLUG-SCREW S						1			
	[23] 007603 018100		SEAL-RING S						1			A18X22-AL
	[24] 104 010 14 08		GASKET KIT-CYLINDER BLOCK S						1			

1130

CRANKSHAFT & FLYWHEEL

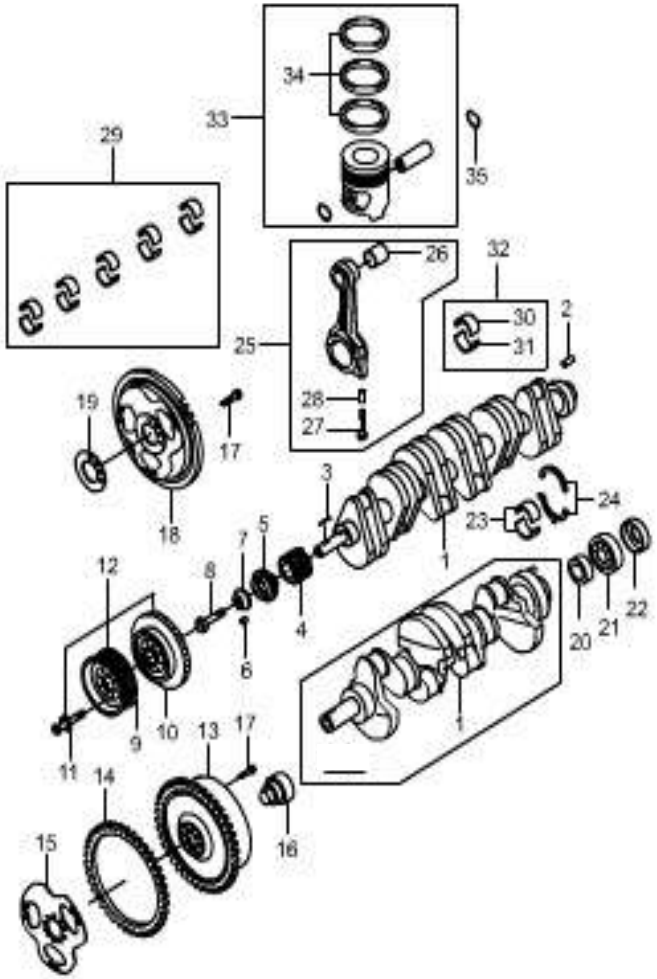

KEY NO.		PART NAME										
			ENGINE							APPLICATION		
I T C	PART NO.	T / M	G 2 3 D	G 3 2 D			OPTION	L / R	Q ' T Y	FROM	TO	REMARK
	[1]		CRANK SHAFT									
	161 031 30 01		S						1			
	162 031 30 01			S					1			
	[02]		PIN-CYLINDRICAL									
	601 997 04 10		S	S					1			
	[03]		KEY-CRANKSHAFT									
	662 991 30 68		S	S					1			
	[04]		SPROCKET ASSY-CRANKSHAFT									
	162 052 30 03		S	S					1			
	[07]		DISC-CRK/SHT VIB.DAMPER									
	604 990 00 40		S	S					1			
	[08]		BOLT-CRK/SHT,CTR									
	161 990 33 01		S						1			
	665 990 00 01			S					1			M18X50-12.9
	[12]		DAMPER ASSY-VIBRATION									
	161 030 31 03		S						1			
	162 030 31 03			S					1			
	[13]		FLYWHEEL ASSY MECH									
	161 030 32 05	M	S						1			

1130

CRANKSHAFT & FLYWHEEL

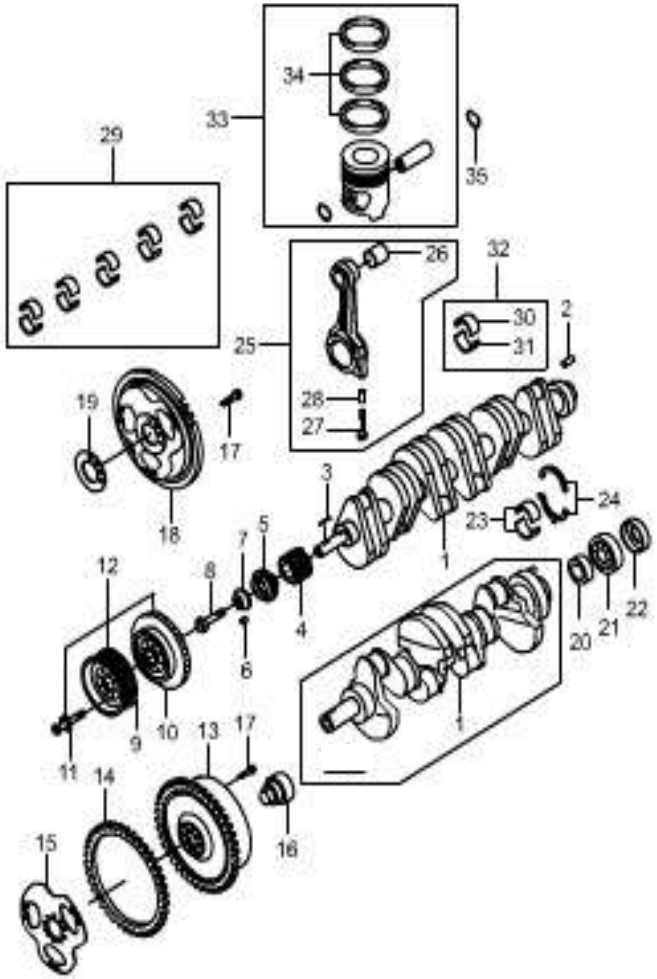

KEY NO.		PART NAME										
			ENGINE							APPLICATION		
ITC	PART NO.	T/M	G23D	G32D			OPTION	L/R	Q'TY	FROM	TO	REMARK
	[14]		GEAR-RING									
	102 032 05 05		S	S					1			
	[[15]		PLATE -DRIVE									
	162 032 30 06			S					2			
	[17]		BOLT-FLYWHEEL MTG									
	111 990 03 12		S	S					8			
	[18]		PLATE ASSY-DRIVE									
	161 030 35 12		S						1			
	161 030 43 12			S					1			
	[19]		PLATE									
	161 032 30 76		S						1			T = 2.6
	161 032 31 76			S					1			T = 2.4
	[20]		CRK/SHT SPACER RING									
	661 031 31 51		S						1			
	[21]		BEARING-GROOVED BALL									
	661 980 30 15		S						1			
	[22]		RING-CRANKSHAFT COVER									
	102 031 01 33		S						1			

1130

CRANKSHAFT & FLYWHEEL

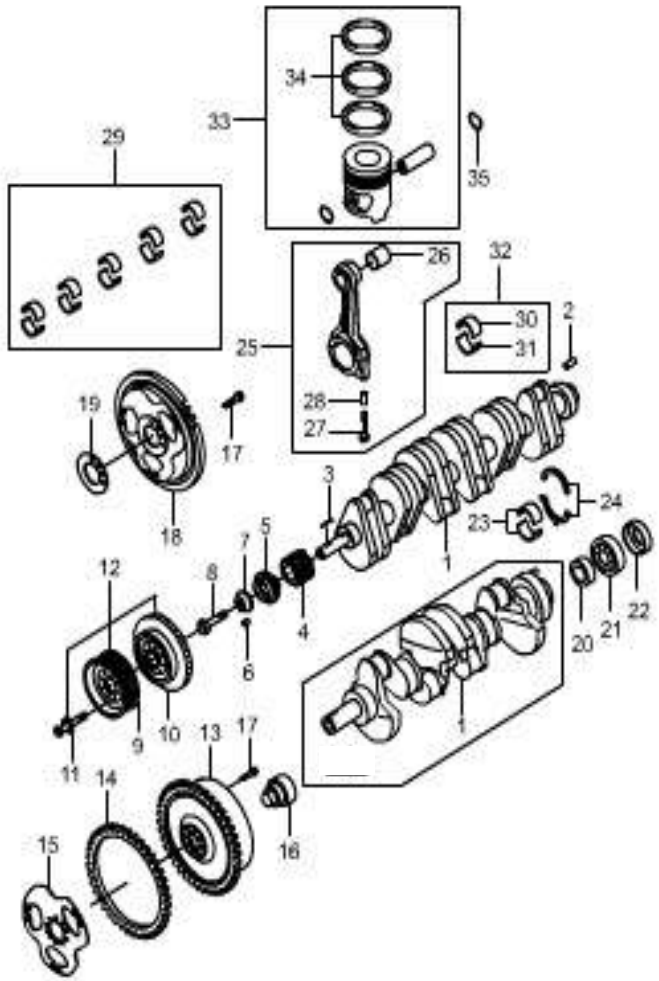

KEY NO.		PART NAME										
			ENGINE							APPLICATION		
I T C	PART NO.	T / M	G 2 3 D	G 3 2 D			OPTION	L / R	Q ' T Y	FROM	TO	REMARK
	[23]		BEARING SET-CRANKSHAFT									
	601030 054052		S						5			BLUE
	601030 054052			S					7			BLUE
	061030 054054		S						5			YELLOW
	061030 054054			S					7			YELLOW
	061030 054056		S						5			RED
	061030 054056			S					7			RED
	601 030 06 40		S						5			R/SIZE I : 57.75MM
	601 030 06 40			S					7			R/SIZE I : 57.75MM
	601 030 07 40		S						5			R/SIZE II : 57.75MM
	601 030 07 40			S					7			R/SIZE II : 57.75MM
	601 030 08 40		S						5			R/SIZE III : 57.75MM
	601 030 08 40			S					7			R/SIZE III : 57.75MM
	601 030 09 40		S						5			R/SIZE IV : 57.00MM
	601 030 09 40			S					7			R/SIZE IV : 57.00MM
	[24]		BEARING SET-THRUST									
	601 030 00 62		S	S					2			2.15MM
	601 030 01 62		S	S					2			2.20MM
	601 030 02 62		S	S					2			2.25MM
	601 030 03 62		S	S					2			2.35MM
	601 030 04 62		S	S					2			2.35MM

1130

CRANKSHAFT & FLYWHEEL

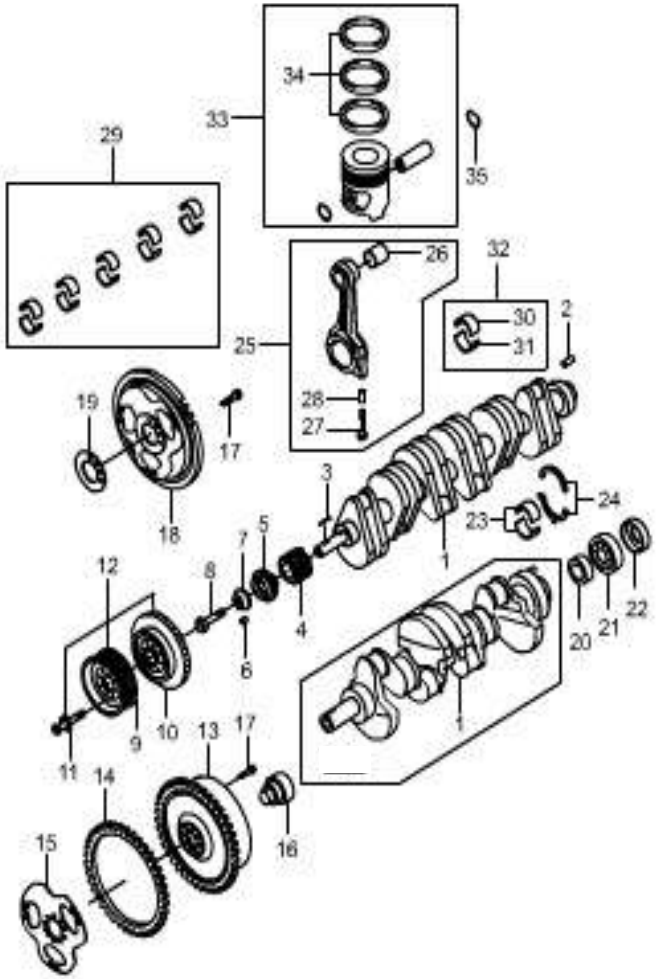

KEY NO.		PART NAME										
			ENGINE						APPLICATION			
ITC	PART NO.	T/M	G23D	G32D			OPTION	L/R	Q'TY	FROM	TO	REMARK
	[25]		CON-ROD ASSY									
	161 030 35 20		S						4			
	162 030 32 20			S					6			
	[26]		BUSHING									
	111 038 02 50		S						4			
	111 038 02 50			S					6			
	[27]		BOLT									
	161 038 30 71		S						8			
	161 038 30 71			S					12			
	[28]		SLEEVE									
	661 991 30 41		S						8			
	661 991 30 41			S					12			
	[30]		BEARING-CONNECTING ROD STD UPR									
	163 038 01 10		S						4			
	163 038 01 10			S					6			
	[31]		BEARING-CONNECTING ROD STD LWR									
	163 038 01 11		S						4			
	163 038 01 11			S					6			

1130

CRANKSHAFT & FLYWHEEL

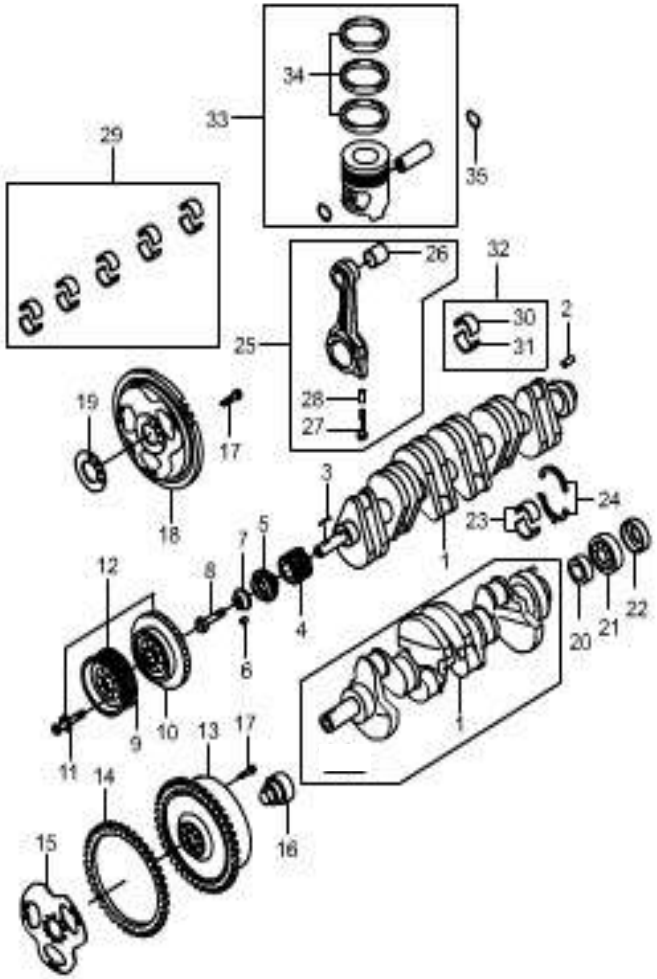

KEY NO. ITC	PART NO.	T/M	ENGINE G23D	ENGINE G32D			OPTION	L/R	Q'TY	APPLICATION FROM	APPLICATION TO	REMARK
	[32]		BEARING KIT-CONNECTING ROD									
	111 038 10 10		S						4			R/SIZE Ⅰ : 47.75MM
	111 038 10 10			S					6			R/SIZE Ⅰ : 47.75MM
	111 038 11 10		S						4			R/SIZE Ⅱ : 47.50MM
	111 038 11 10			S					6			R/SIZE Ⅰ : 47.50MM
	111 038 12 10		S						4			R/SIZE Ⅲ : 47.25MM
	111 038 12 10			S					6			R/SIZE Ⅰ : 47.25MM
	111 038 13 10		S						4			R/SIZE Ⅳ : 47.00MM
	111 038 13 10			S					6			R/SIZE Ⅰ : 47.00MM
	[33]		PISTON ASSY									
	161 030 36 17		S						4			DY,90.9 & 90.95 & 910
	162 030 41 17			S					6			DY STD(G32D)
	[34]		RING SET-PISTON									
	003 030 87 24		S						4			STD
	003 030 95 24		S						4			STD
	003 030 88 24		S						4			R/SIZE Ⅰ
	003 030 96 24		S						4			R/SIZE Ⅰ
	002 030 93 34			S					6			STD
	003 030 31 34			S					6			STD
	002 030 94 24			S					6			R/SIZE Ⅰ
	003 030 32 24			S					6			R/SIZE Ⅰ
	002 030 95 24			S					6			R/SIZE Ⅱ
	003 030 33 24			S					6			R/SIZE Ⅱ
	[35]		RING-SNAP									
	102 994 01 35		S						8			
	102 994 01 35			S					12			

1211

CYLINDER HEAD & GASKET KIT

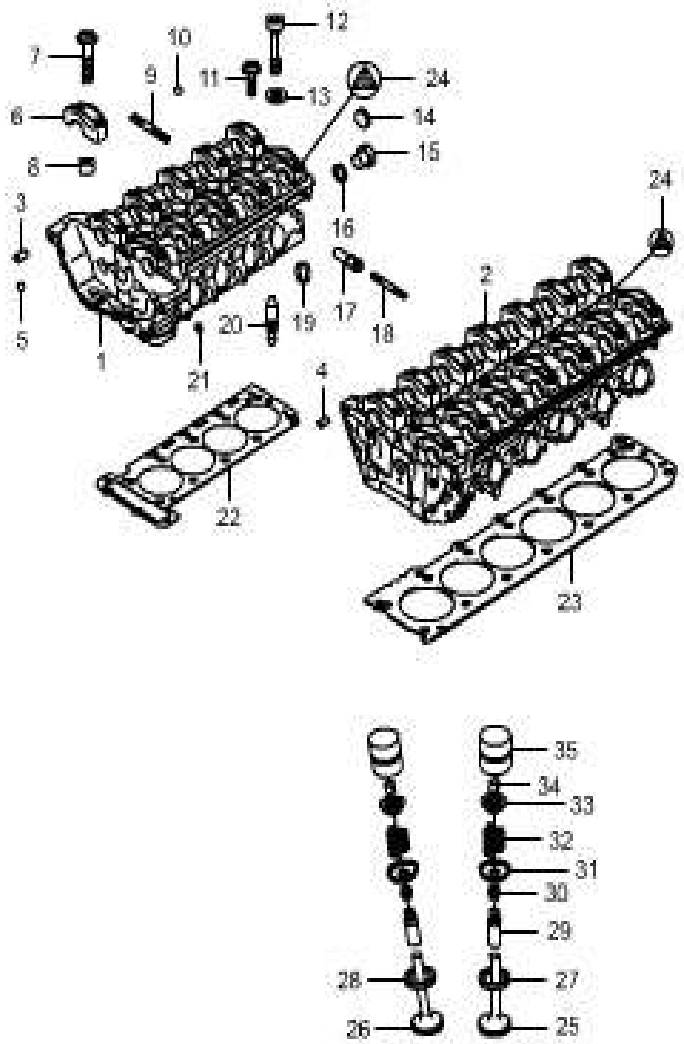

KEY NO.		PART NAME									
			ENGINE						APPLICATION		
ITC	PART NO.	T/M	G23D	G32D			OPTION	L/R	Q'TY	FROM	TO	REMARK
	[01]		HEAD ASSY-CYL.									
	161 010 32 20		S						1			WITH CAM/SHT CAP
	[02]		HEAD ASSY-CYL.									
	162 010 30 20			S					1			WITH CAM/SHT CAP
	[03]		SLEEVE									
	661 991 30 41		S						4			
	[04]		PIN-CYLINDERICAL									
	000007 008203			S					2			8H 8X10
	[05]		BALL-LOCKER									
	540 130 80 00		S						2			8MM
	540 130 80 00			S					6			8MM
	[06]		CAP-CAMSHAFT BEARING									
	111 051 04 03		S						6			STD
	111 051 05 03		S						6			R/SIZE I
	111 051 06 03		S						2			STD;CENTRAL
	111 051 07 03		S						2			R/SIZE I;CENTRAL
	111 051 08 03		S						2			STD;FRT
	111 051 09 03		S						2			R/SIZE;FRT
	104 051 51 03			S					1			R/SIZE;FRT
	104 051 46 03			S					1			STD;CENTRAL
	104 051 47 03			S					1			R/SIZE I;CENTRAL
	104 051 44 03			S					10			STD
	104 051 45 03			S					10			R/SIZE

1211

CYLINDER HEAD & GASKET KIT

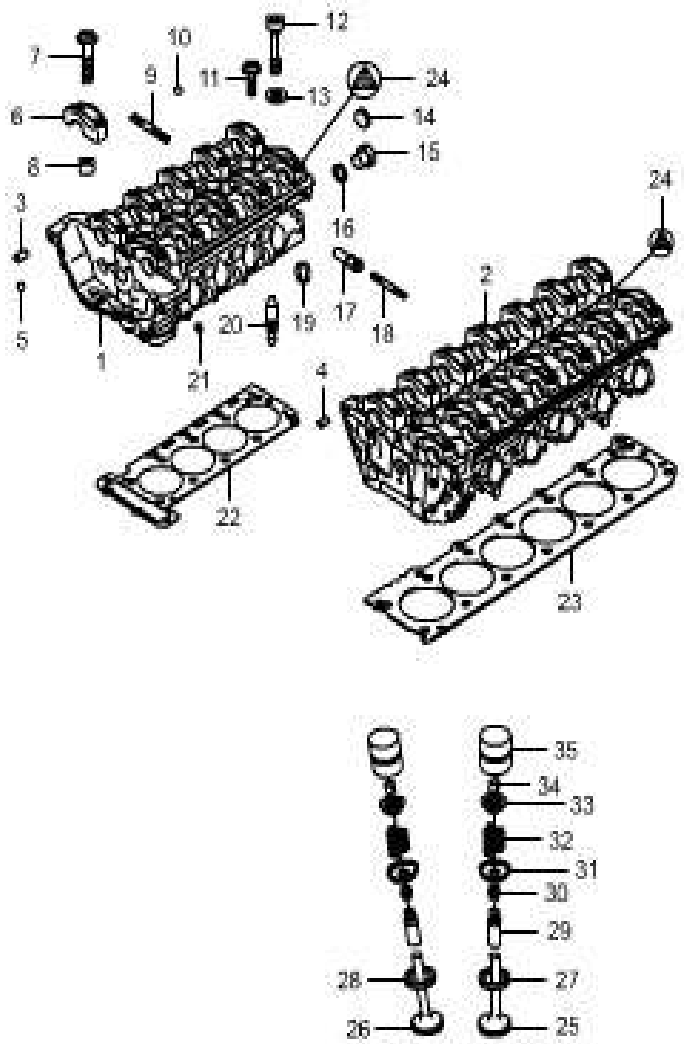

KEY NO.		PART NAME										
			ENGINE							APPLICATION		
ITC	PART NO.	T/M	G23D	G32D			OPTION	L/R	Q'TY	FROM	TO	REMARK
	[06]		CAP-CAMSHAFT BEARING									
	104 051 50 03		S						1			STD;FRT
	104 051 48 03		S						1			STD;FRT
	104 051 36 03		S						1			R/SIZE;FRT
	104 051 49 03		S						1			R/SIZE;FRT
	[07]		BOLT									
	120 990 02 21		S						20			
	120 990 02 21		S						28			
	[08]		CONNECTOR									
	111 990 04 78		S						4			
	[09]		BOLT-STUD									
	111 990 04 05		S						11			
	111 990 04 05		S						22			
	[10]		BALL-LOCKER									
	540 130 60 00		S						4			6MM
	540 130 60 00		S						6			6MM
	[11]		BOLT									
	914005 008009		S						4			M8X35
	[12]		BOLT-FLANGE									
	161 990 31 10		S						10			
	162 990 32 12		S						14			

1211

CYLINDER HEAD & GASKET KIT

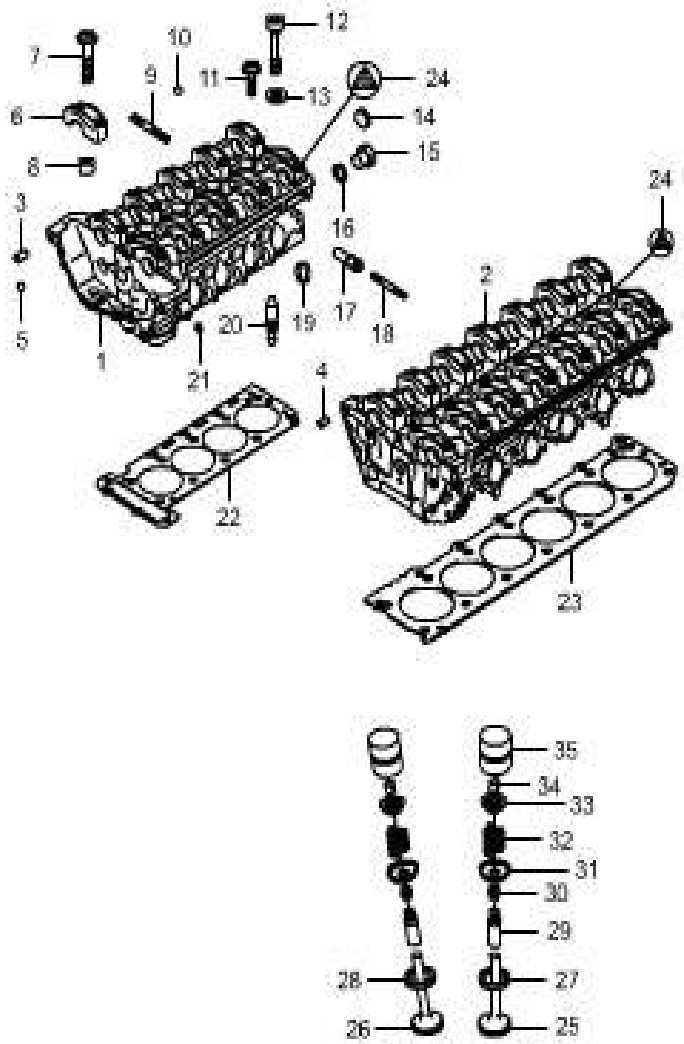

KEY NO.		PART NAME									
			ENGINE						APPLICATION		
ITC	PART NO.	T/M	G23D	G32D			OPTION	L/R	Q'TY	FROM	TO	REMARK
	[13]		WASHER									
	102 016 03 76		S						14			
	[14]		PLUG-EXPANSION									
	000443 020004		S						1			A20 DBL8451.11
	000443 012001			S					1			A12 DBL8451.11
	[15]		PLUG ASSY									
	000908 010002		S						2			M10X1ST L8451.21
	000908 010002			S					1			M10X1ST L8451.21
	[16]		RING-SEALING									
	007603 010103		S						2			A10X14-CU
	007603 012110			S					2			A12X17-CU
	[17]		FITTING-HOSE									
	161 990 37 78		S						1			
	[18]		PIN-SPRING									
	601 992 04 25			S					2			
	[19]		PLUG-EXPANSION									
	403 997 06 20		S						7			
	403 997 06 20			S					12			
	[20]		NOZZLE									
	111 017 00 12		S						2			

1211

CYLINDER HEAD & GASKET KIT

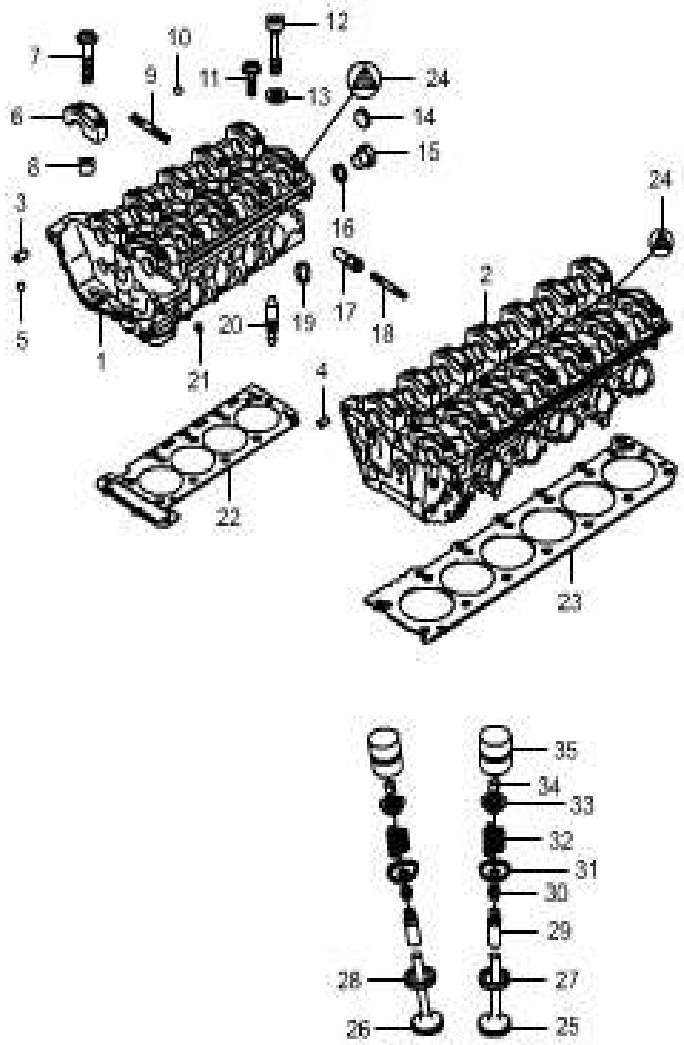

KEY NO.		PART NAME										
			ENGINE							APPLICATION		
I T C	PART NO.	T / M	G 2 3 D	G 3 2 D			OPTION	L / R	Q ' T Y	FROM	TO	REMARK
	[21]		PLUG-EXPANSION									
	162 016 00 33		S						1			
	[22]		GASKET-CYL.HEAD									
	111 016 28 20		S						1			
	[23]		GASKET-CYL.HEAD									
	162 016 34 20		S						1			
	[24]		GASKET KIT-CYLINDER HEAD									
	111 010 41 20		S						1			
	104 010 32 20		S						1			
	[25]		VALVE-INTAKE									
	161 053 32 01		S						8			
	161 053 32 01		S						12			
	[26]		VALVE ASSY-EXHAUST									
	161 050 31 27		S						8			
	161 050 31 27		S						12			
	[27]		RING-INTAKE VALVE SEAT									
	104 053 05 31		S						8			STD;36.10MM
	104 053 0531		S						12			STD;36.10MM
	104 053 06 31		S						8			R/SIZE;37.30MM
	104 053 06 31		S						12			R/SIZE;37.30MM
	[28]		RING-EXHAUST VALVE SEAT									
	10405 30232		S						8			STD;32.10MM

1211

CYLINDER HEAD & GASKET KIT

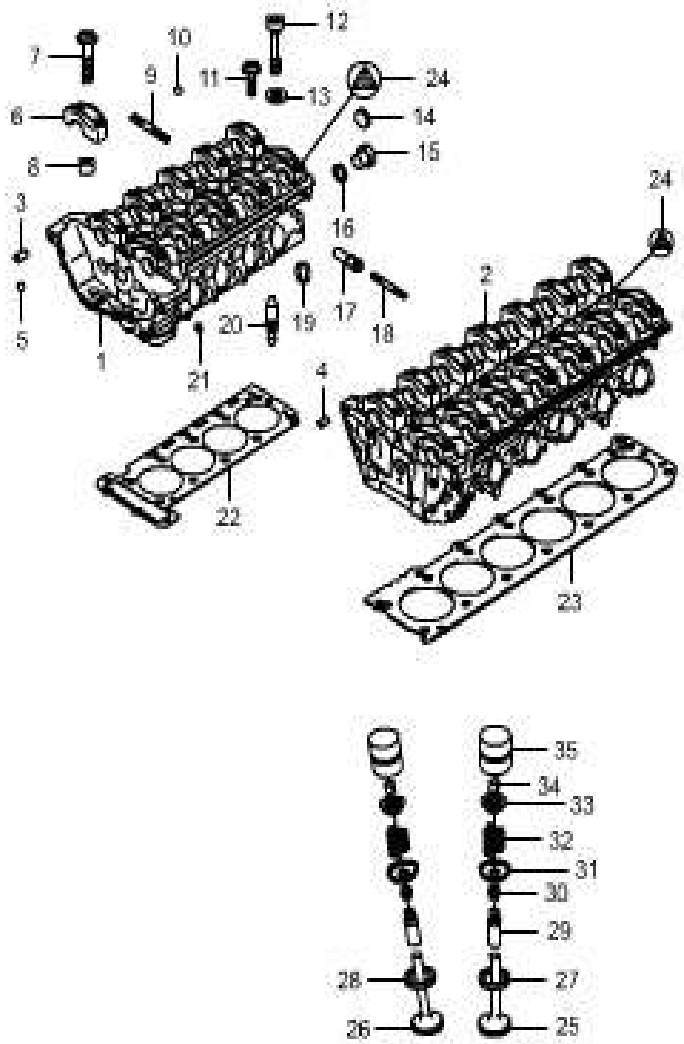

KEY NO.		PART NAME										
			ENGINE							APPLICATION		
I T C	PART NO.	T / M	G 2 3 D	G 3 2 D			OPTION	L / R	Q ' T Y	FROM	TO	REMARK
	[28]		RING-EXHAUST VALVE SEAT									
	104 053 02 32			S					12			STD;32.10MM
	104 053 01 32		S						8			R/SIZE;33.30MM
	104 053 01 32			S					12			R/SIZE;33.30MM
	[29]		GUIDE-VALVE									
	111 053 10 29		S						16			STD;12.50MM
	111 053 10 29			S					24			STD;12.50MM
	111 053 11 29		S						16			R/SIZE I;12.70MM
	111 053 11 29			S					24			R/SIZE I;12.70MM
	111 053 12 29		S						16			R/SIZE II;12.90MM
	111 053 12 29			S					24			R/SIZE II;12.90MM
	[30]		SEAL-VALVE STEM									
	161 053 31 58		S						16			
	161 053 31 58			S					24			
	[31]		RETAINER-VALVE SPRING, UNDER									
	111 053 06 25		S						16			
	111 053 06 25			S					24			
	[32]		SPRING-VALVE									
	111 053 00 20		S						16			
	111 053 00 20			S					24			
	[33]		RETAINER-VALVE SPRING UPR									
	603 053 03 25		S						16			
	603 053 03 25			S					24			

1211

CYLINDER HEAD & GASKET KIT

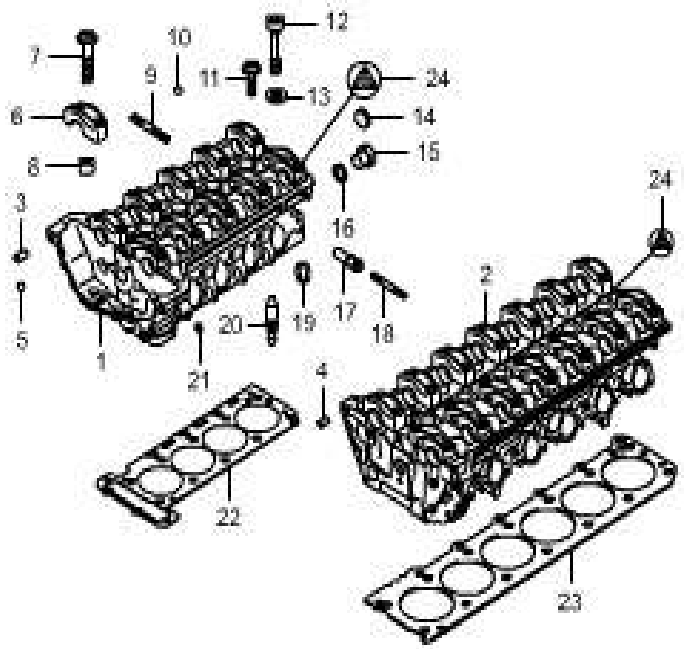

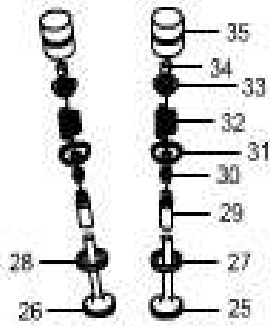

KEY NO.		PART NAME										
			ENGINE							APPLICATION		
ITC	PART NO.	T/M	G23D	G32D			OPTION	L/R	Q'TY	FROM	TO	REMARK
	[34]		COTTER-VALVE									
	102 053 02 26		S						32			
	102 053 02 26			S					48			
	[35]		TAPPET ASSY-HYDRAULIC									
	104 050 12 25		S						16			INA
	104 050 12 25			S					24			INA

1221

CYLINDER HEAD COVER & CAMSHAFT

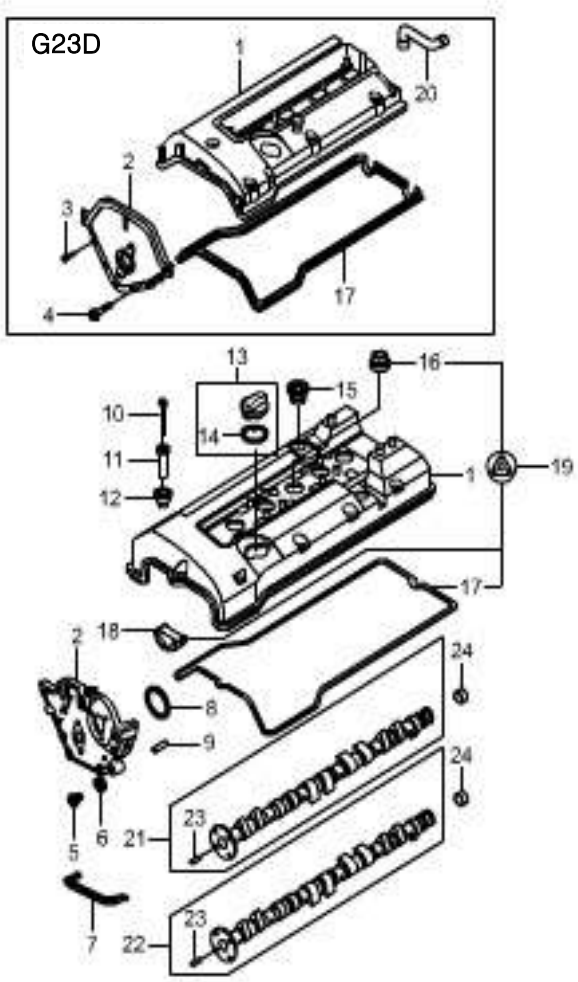

KEY NO.		PART NAME										
ITC	PART NO.	T/M	ENGINE G23D	ENGINE G32D			OPTION	L/R	Q'TY	APPLICATION FROM	APPLICATION TO	REMARK
	[01]		COVER ASSY-CYLINDER HEAD									
	161 010 33 30		S						1			
	162 010 33 30			S					1			
	[02]		COVER-FRT(CYL.HEAD)									
	111 016 09 06		S						1			
	104 010 12 31			S					1			
	[03]		BOLT-COMB									
	914005 008015		S						1			M8X35 8.8 L8451.21
	914005 008027			S					3			M8X60 8.8 L8451.21
	[04]		BOLT-COMB									
	914005 006008		S						6			M6X22-8.8 L8451.21
	914010 008018			S					3			M8X80 8.8 L8451.21
	[05]		PLUG-SCREW									
	000908 010002		S						2			M10X1ST L8451.21
	000908 010002			S					1			M10X1ST L8451.21
	[06]		RING-SEALING									
	007603 010101			S					1			A10X14 DIN7603-AL
	[07]		GASKET-T.G.C.COVER									
	162 015 30 20			S					1			
	[08]		O-RING									
	017 997 21 48		S	S					1			

1221

CYLINDER HEAD COVER & CAMSHAFT

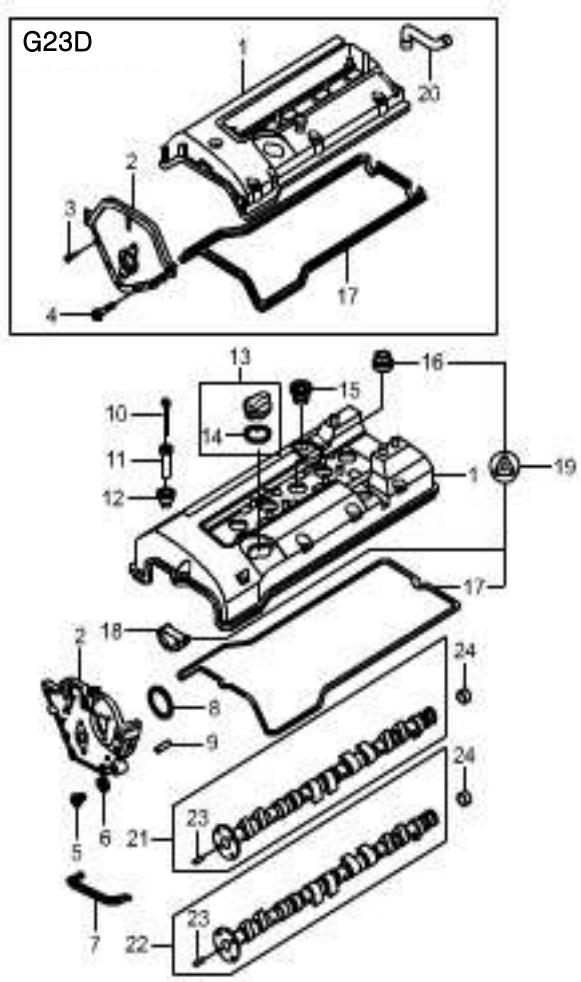

KEY NO.		PART NAME										
			ENGINE							APPLICATION		
ITC	PART NO.	T/M	G23D	G32D			OPTION	L/R	Q'TY	FROM	TO	REMARK
	[09]		PIN-CYLINDERICAL									
	601 997 04 10		S						2			
	[10]		BOLT-COMB									
	914011 006019		S						4			M6X45 8.8 L8440.40
	914011 006018		S						6			M6X60 8.8 D8440.40
	000931 006226		S						8			M6X65-8.8 L8440.40
	000931 006225		S						4			M6X50-8.8 L8440.40
	[11]		SLEEVE									
	111 094 03 91		S						8			
	162 992 32 20		S						4			
	[12]		PIECE-THRUST									
	162 016 30 64		S						12			
	[13]		CAP ASSY-OIL FILLER									
	161 018 31 02		S	S					1			
	[14]		GASKET									
	104 141 07 80		S	S					1			
	[15]		SEALING-VENTILATION									
	162 016 35 80		S						2			
	[16]		SEALING-SPARK PLUG HOLE									
	161 016 31 21		S						4			
	162 016 37 80		S						6			

1221

CYLINDER HEAD COVER & CAMSHAFT

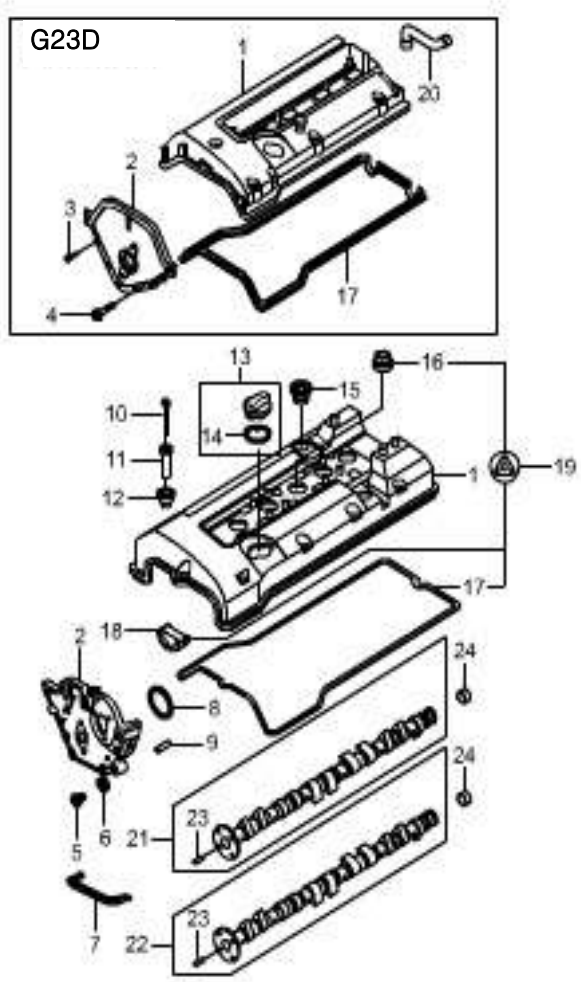

KEY NO.		PART NAME										
			ENGINE							APPLICATION		
ITC	PART NO.	T/M	G23D	G32D			OPTION	L/R	Q'TY	FROM	TO	REMARK
	[17]		GASKET-CYL.HEAD COVER									
	161 016 33 21		S						1			
	162 016 31 21			S					1			
	[18]		SEAL-CAMSHAFT									
	162 016 36 80			S					2			
	[19]		GASKET KIT-CYLINDER HEAD									
	104 010 21 30			S					1			
	[20]		HOSE-VENTILATION									
	111 018 10 82		S						1			
	[21]		CAMSHAFT ASSY-INTAKE									
	161 050 36 01		S						1			
	162 050 33 01			S					1			STD
	[22]		CAMSHAFT ASSY-EXHAUST									
	161 050 33 01		S						1			
	162 050 32 01			S					1			STD
	[23]		PIN-CYLINDERICAL									
	601 997 04 10		S	S					1			
	[24]		PLUG-EXPANSION									
	000443 011001		S						4			A11 DBL8451.11
	000443 014001			S					4			A14 DBL8451.11

1311

CHAIN DRIVE

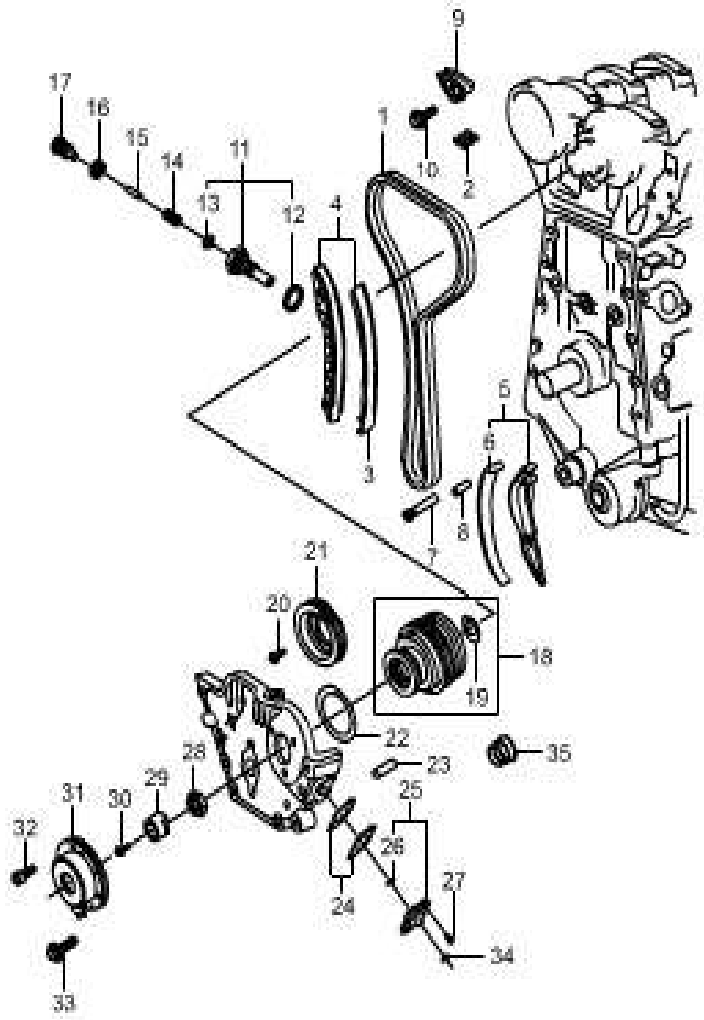

KEY NO.		PART NAME										
			ENGINE							APPLICATION		
ITC	PART NO.	T/M	G23D	G32D			OPTION	L/R	Q'TY	FROM	TO	REMARK
	[01]		CHAIN-DOUBLE BUSH									
	002 997 93 94		S	S					1			
	[02]		LINK ASSY-CONNECTOR									
	000 997 21 98		S	S					1			
	[03]		LINING-RUBBER									
	111 052 02 83		S						1			
	104 052 05 83			S					1			
	[04]		RAIL ASSY-CLAMPING									
	161 050 31 16		S						1			
	162 050 30 16			S					1			
	[05]		RAIL ASSY-SLIDING									
	161 052 30 16		S						1			
	162 050 31 16			S					1			
	[06]		LINING-RUBBER									
	162 052 30 83			S					1			
	[07]		PIN-SLIDING RAIL									
	601 052 06 74		S						1			
	104 052 07 74			S					1			
	[08]		PIN-CYLINDRICAL									
	111 997 02 10		S						1			
	000007 008103			S					1			

1311

CHAIN DRIVE

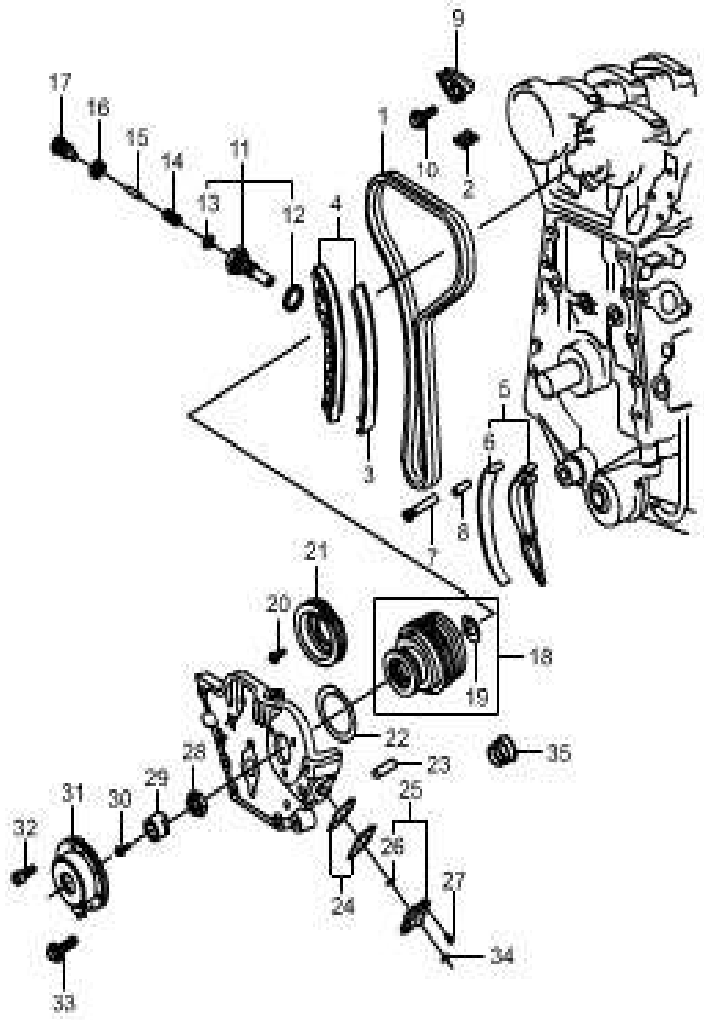

KEY NO.		PART NAME										
			ENGINE							APPLICATION		
ITC	PART NO.	T/M	G23D	G32D			OPTION	L/R	Q'TY	FROM	TO	REMARK
	[09]		RAIL-SLIDING,UPPER									
	111 050 11 16		S						1			
	104 052 14 16			S					1			
	[10]		BOLT									
	914005 006041		S						2			M6X45
	914010 008018			S					3			M6X80
	[11]		TIGHTENER ASSY-CHAIN									
	111 050 03 11		S						1			
	120 050 01 11			S					1			
	[12]		RING-SEALING									
	007603 027101		S	S					1			A27X33
	[13]		RING-SNAP									
	103 052 01 93		S	S					1			
	[14]		SPRING-COMPRESSION									
	104 993 06 01		S	S					1			
	[15]		PIN									
	601 991 00 01		S	S					1			
	[16]		RING-SEALING									
	007603 020100		S	S					1			A20X24

1311

CHAIN DRIVE

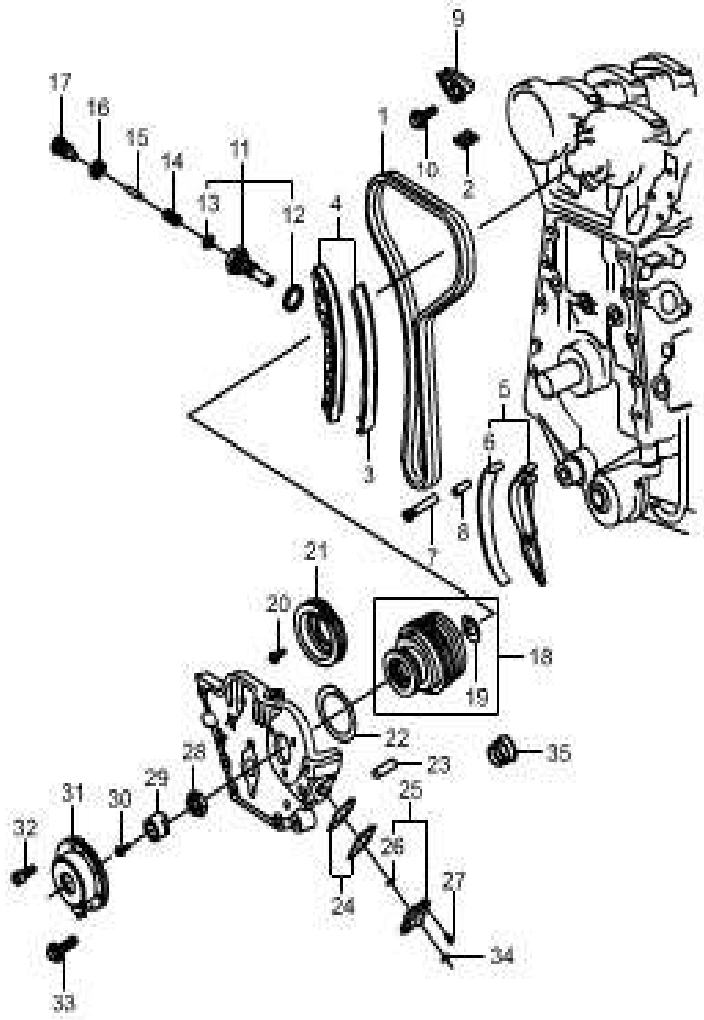

KEY NO.		PART NAME										
			ENGINE							APPLICATION		
ITC	PART NO.	T/M	G23D	G32D			OPTION	L/R	Q'TY	FROM	TO	REMARK
	[17]		PLUG ASSY-SCREW									
	104 050 01 66		S	S					1			
	[18]		ADJUSTER ASSY									
	161 050 30 47		S						1			
	162 050 30 47			S					1			
	[19]		RING-LOCK									
	000472 018000		S	S					1			
	[20]		BOLT									
	120 990 02 04		S	S					6			
	[21]		SPROCKET-CAMSHAFT									
	120 052 04 01		S	S					2(1)			
	[22]		O-RING									
	017 997 21 48		S	S					1			
	[23]		PIN-CYLINDERICAL									
	308734 008002		S	S					2			
	[24]		SHIM									
	119 153 11 52		S	S					2			R/SIZE 0.1MM
	119 153 12 52		S	S					2			R/SIZE 0.2MM
	119 153 13 52		S	S					2			R/SIZE 0.3MM
	119 153 14 52		S	S					2			R/SIZE 0.4MM
	119 153 15 52		S	S					2			R/SIZE 0.5MM

1311

CHAIN DRIVE

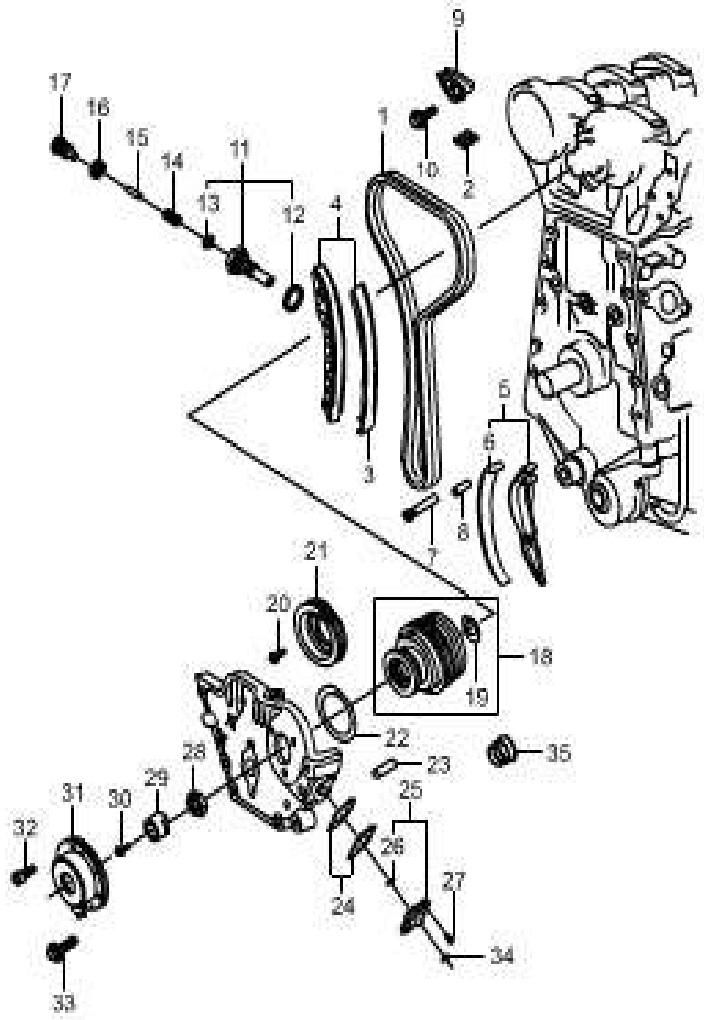

KEY NO.		PART NAME										
			ENGINE							APPLICATION		
ITC	PART NO.	T/M	G23D	G32D			OPTION	L/R	Q'TY	FROM	TO	REMARK
	[24]		SHIM									
	119 153 16 52		S	S					2			R/SIZE 0.6MM
	119 153 17 52		S	S					2			R/SIZE 0.7MM
	119 153 16 52		S	S					2			R/SIZE 0.6MM
	119 153 18 52		S	S					2			R/SIZE 0.8MM
	119 153 19 52		S	S					2			R/SIZE 0.9MM
	119 153 20 52		S	S					2			R/SIZE 1.0MM
	[25]		SENSOR ASSY-CAM POSITION									
	161 153 32 28		S	S					1			
	[26]		RING-O									
	104 997 01 48		S	S					1			
	[27]		BOLT									
	000912 006066		S	S					2			M6X16
	[28]		NUT									
	104 051 02 72		S	S					1			
	[29]		ARMATURE									
	111 051 00 43		S	S					1			
	[30]		BOLT-FLANGE									
	104 990 10 04		S	S					3			
	[31]		MAGNET ASSY-CAMSHAFT ADJUSTER									
	162 051 31 77		S	S					1			

1311

CHAIN DRIVE

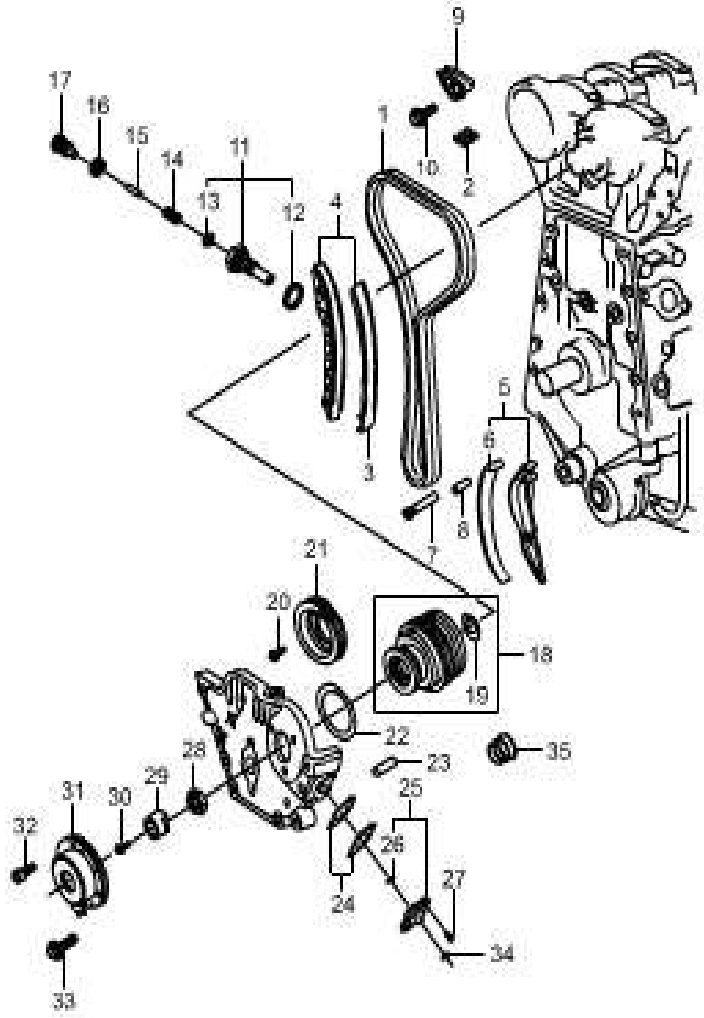

KEY NO.		PART NAME										
			ENGINE							APPLICATION		
I T C	PART NO.	T / M	G 2 3 D	G 3 2 D			OPTION	L / R	Q ' T Y	FROM	TO	REMARK
	[32]		BOLT									
	000912 006097		S						3			M6X16
	914141 006502			S					3			M6X16
	[33]		BOLT									
	914005 008027		S						3			M8X60
	914010 008018			S					3			M8X60
	[34]		RING-O									
	104 997 00 48		S	S					1			

1331

TIMING CASE - G23D

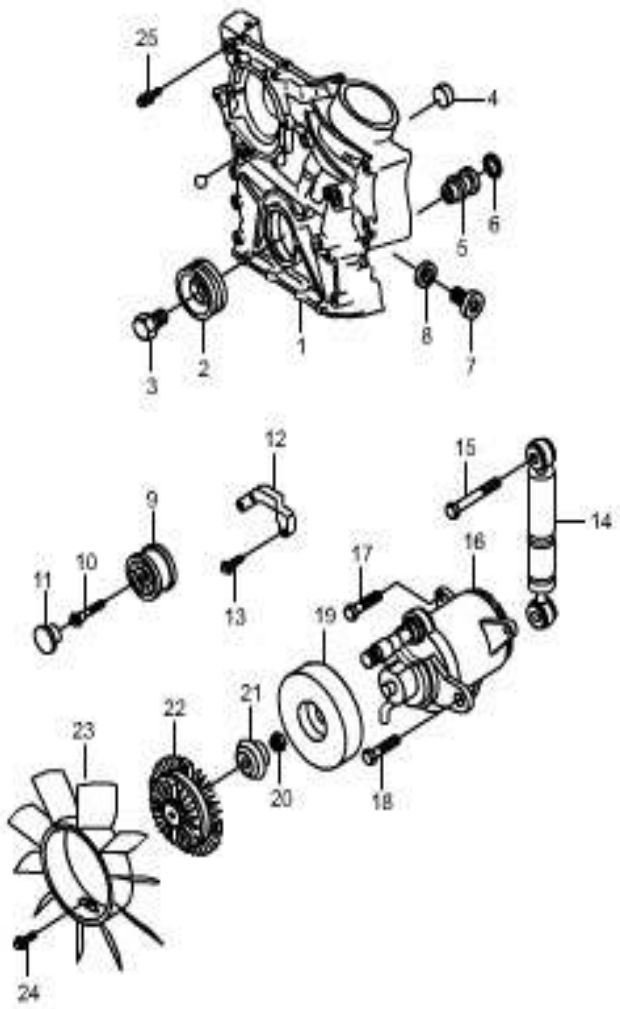

KEY NO.		PART NAME											
			ENGINE							APPLICATION		
ITC	PART NO.	T/M	G23D	G32D			OPTION	L/R	Q'TY	FROM	TO	REMARK
	[01] 161 015 31 01		COVER ASSY-TIMING GEAR CASE S						1			
	[02] 661 997 36 46		SEALING-CRK/SHT,FRT S						1			
	[03] 007604 018100		SCREW-LOCK S						1			M18
	[04] 000443 020004		PLUG-EXPANSION S						1			
	[05] 111 018 02 70		CONNECTOR S						2			
	[06] 019 997 75 48		O-RING S						2			
	[07] 000908 024004		SCREW S						2			
	[08] 007603 024105		SEAL RING S						1			A24X29 DIN7603-AL
	[09] 665 200 30 70		PULLEY ASSY-IDLER S						1			

1331

TIMING CASE - G23D

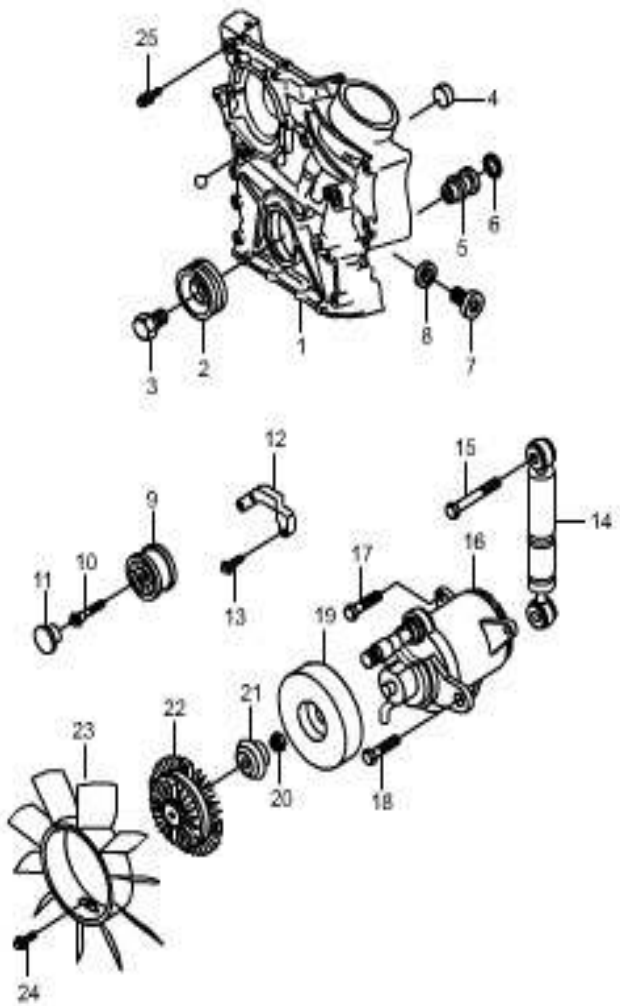

KEY NO.		PART NAME										
ITC	PART NO.	T/M	ENGINE G23D	ENGINE G32D	ENGINE	ENGINE	OPTION	L/R	Q'TY	APPLICATION FROM	APPLICATION TO	REMARK
	[10] 661 990 32 12		BOLT S						1			
	[11] 661 202 30 22		COVER-IDLER PULLEY S						1			
	[12] 161 202 31 40		BRACKET-IDLER PULLEY S						1			
	[13] 914005 008029		BOLT S						3			M8X40
	[14] 111 200 02 14		SHOCK ABSORBOR ASSY S						1			
	[15] 914010 008003		BOLT S						1			
	[16] 111 200 07 70		TENSIONER ASSY-BELT S						1			
	[17] 914010 008033		BOLT S						2			M8X75
	914005 008005		S						1			M8X25
	[18] 914126 008077		BOLT S						1			M8X22

1331

TIMING CASE - G23D

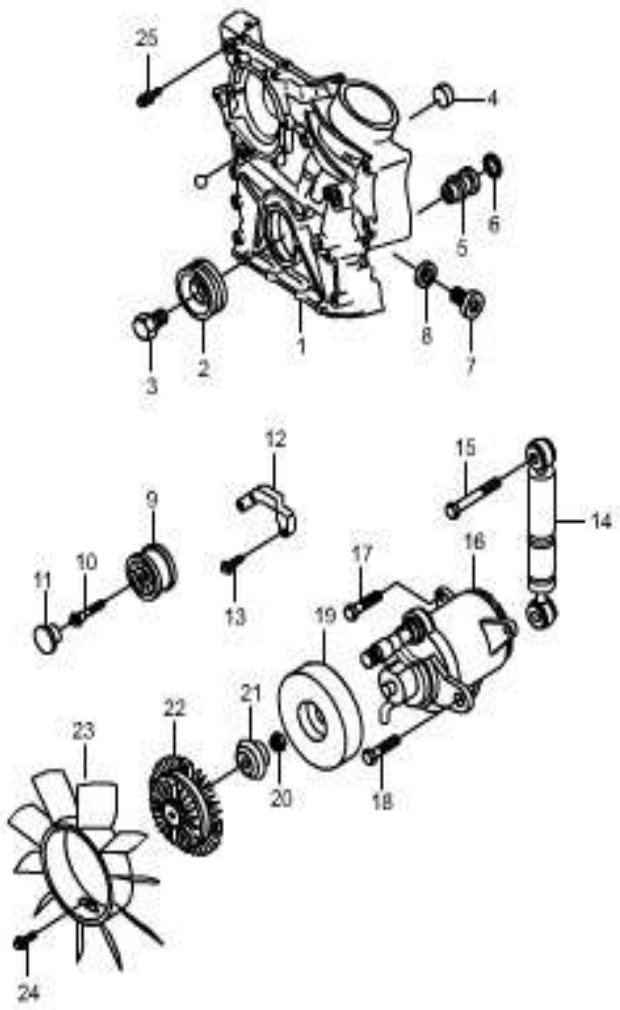

KEY NO.		PART NAME										
			ENGINE							APPLICATION		
ITC	PART NO.	T/M	G23D	G32D			OPTION	L/R	Q'TY	FROM	TO	REMARK
	[19] 111 200 00 70		PULLEY ASSY-A/T TENSIONER S						1			
	[20] 161 990 30 53		NUT-FLANGE S						1			
	[21] 111 202 01 22		COVER-LOCK S						1			
	[22] 000 200 39 22		VISCO-CLUTCH S						1			
	[23] 003 205 04 06		FAN ASSY S						1			
	[24] 914020 006017		BOLT S						3			M6X14

1332

TIMING CASE - G32D

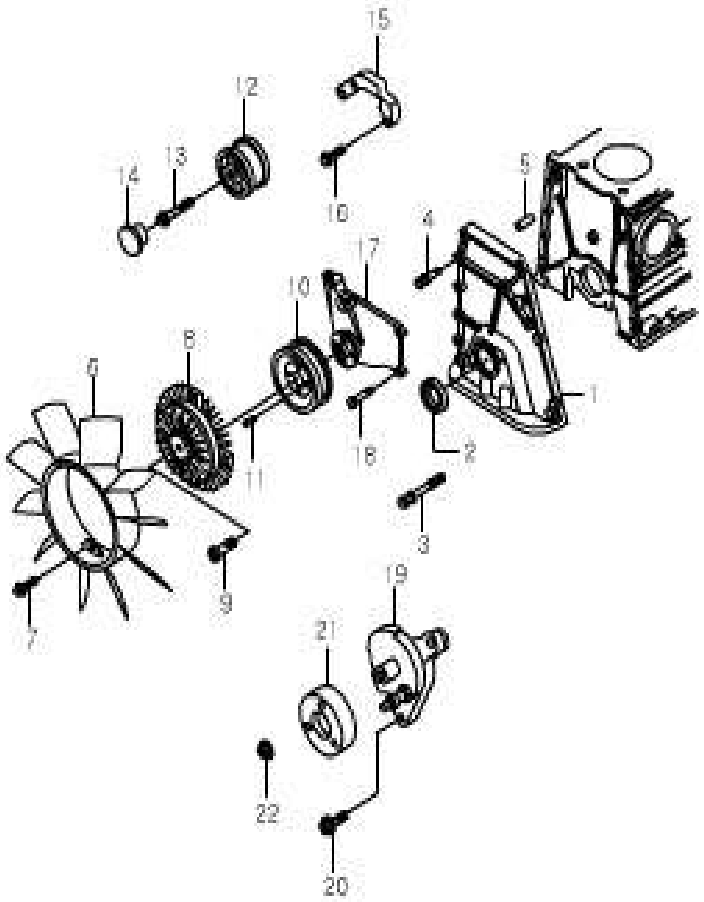

KEY NO.		PART NAME										
ITC	PART NO.	T/M	ENGINE G23D	ENGINE G32D	ENGINE	ENGINE	OPTION	L/R	Q'TY	APPLICATION FROM	APPLICATION TO	REMARK
	[01] 162 015 30 02		COVER-TIMING GEAR CASE S						1			
	[02] 661 997 36 46		SEALING-CRK/SHT,FRT S						1			
	[03] 914007 008017		BOLT S						1			M8X60
	[04] 914035 008004		BOLT S						1			M8X60
	[05] 308734 008003		PIN-CYL. S						1			ISO 8734-8×50-A-ST
	[06] 103 200 06 23		FAN ASSY S						1			
	[07] 914020 006017		BOLT S						3			M6X14
	[08] 162 200 32 22		VISCO-CLUTCH S						1			
	[09] 000912 010078		BOLT S						1			M10X45

1332

TIMING CASE - G32D

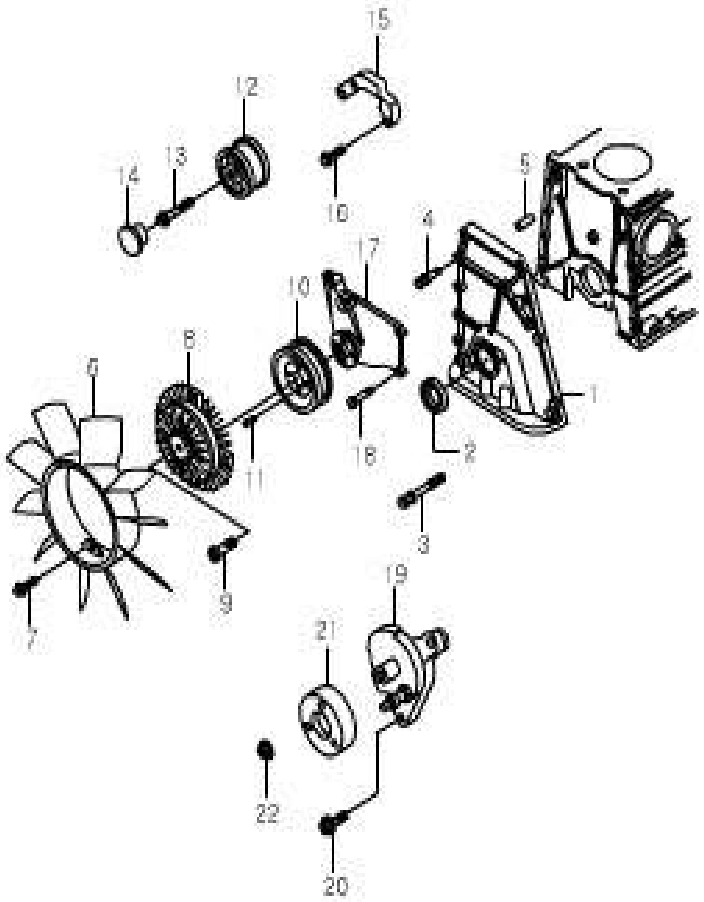

KEY NO.		PART NAME										
ITC	PART NO.	T/M	ENGINE G23D	ENGINE G32D	ENGINE	ENGINE	OPTION	L/R	Q'TY	APPLICATION FROM	APPLICATION TO	REMARK
	[10] 162 205 31 10		PULLEY-COOLING FAN S						1			
	[11] 914021 006001		BOLT S						4			M6X12
	[12] 665 200 30 70		PULLEY ASSY-IDLER S						1			
	[13] 661 990 32 12		BOLT S						1			
	[14] 661 202 30 22		IDLER PULLEY COVER S						1			
	[15] 161 202 31 40		BRACKET-IDLER PULLEY S						1			
	[16] 914005 008029		BOLT S						3			M8X40
	[17] 104 200 20 28		BRACKET-COOLING FAN S						1			
	[18] 914005 008044		BOLT S						3			M8X65

1332

TIMING CASE - G32D

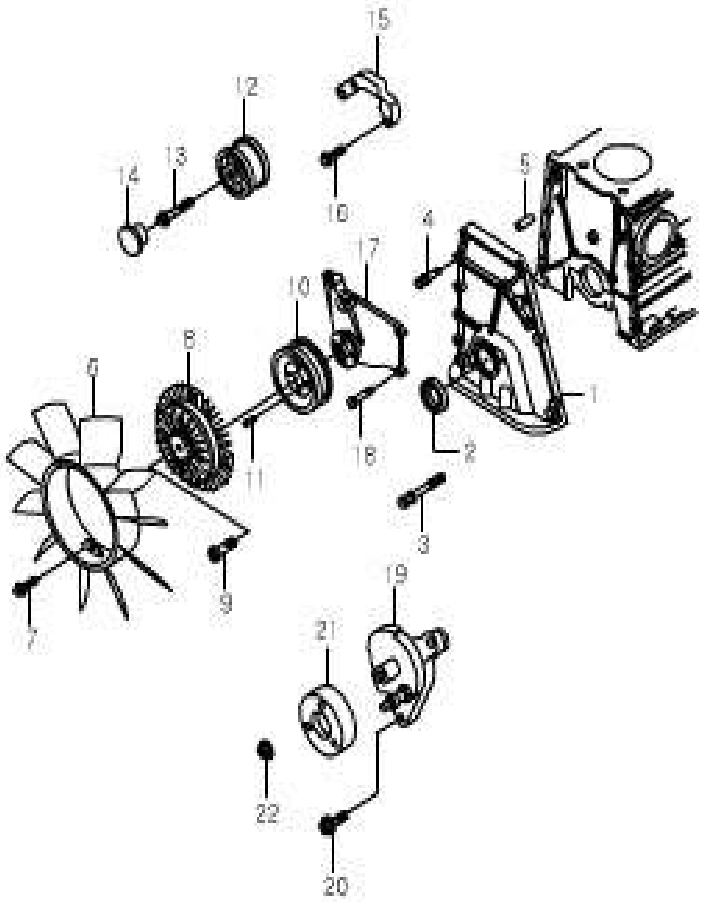

KEY NO.		PART NAME										
ITC	PART NO.	T/M	ENGINE G23D	ENGINE G32D	ENGINE	ENGINE	OPTION	L/R	Q'TY	APPLICATION FROM	APPLICATION TO	REMARK
	[19] 162 200 32 70		TIGHTENER ASSY-BELT S						1			
	[20] 914021 008020		BOLT-COMBI S						3			M8X30
	[21] 162 200 30 70		PULLEY ASSY-AUTO TENSIONER S						1			
	[22] 161 990 30 53		NUT-FLANGE S						1			

1350

BELT SYSTEM

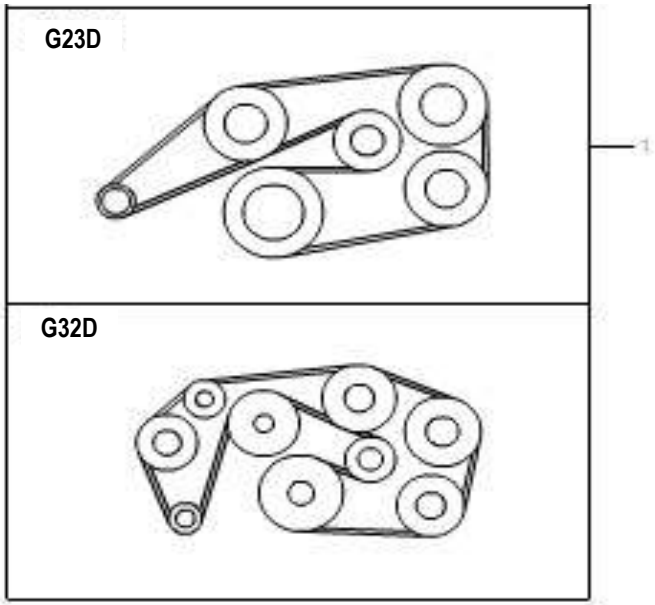

KEY NO.		PART NAME										
			ENGINE							APPLICATION		
ITC	PART NO.	T/M	G23D	G32D			OPTION	L/R	Q'TY	FROM	TO	REMARK
	[01]		BELT-POLY GROOVED									
	011 997 19 92		S						1			L=215
	007 997 82 92			S					1			L=224

1411

ENGINE WIRING

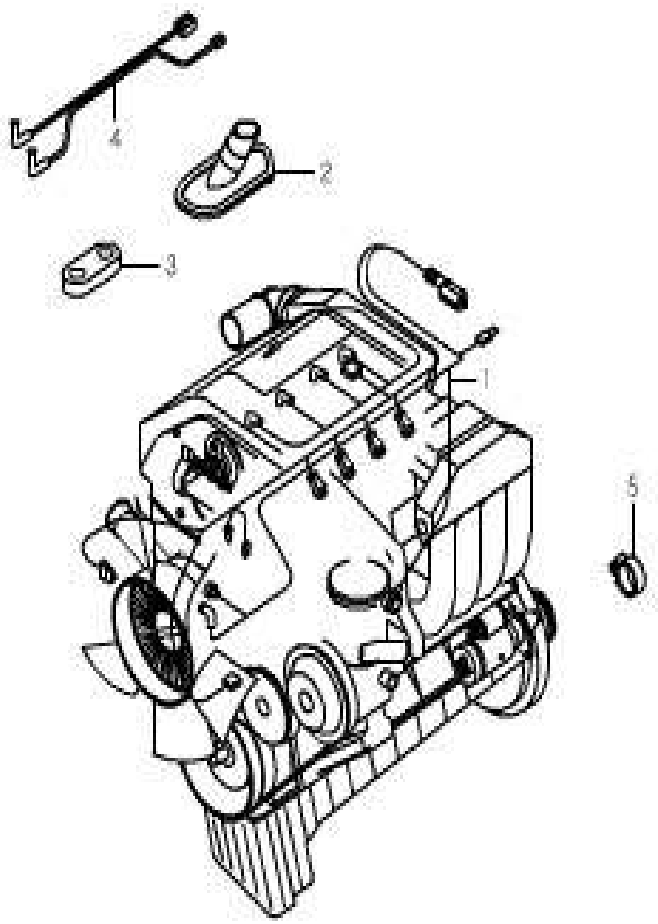

KEY NO.		PART NAME										
			ENGINE							APPLICATION		
ITC	PART NO.	T/M	G23D	G32D			OPTION	L/R	Q'TY	FROM	TO	REMARK
	[01]		WIRING HARNESS-ENGINE MAIN									
	161 440 80 33		S						1			
	162 440 53 33			S					1			
	[02]		GROMMET-ENG MAIN									
	162 988 30 27		S	S					1			
	[03]		GROMMET-FENDER APRON									
	162 988 31 27		S						1			
	162 988 31 27			S					1			
	[04]		WIRING HARNESS-ECU MAIN									
	161 440 63 33		S						1			
	162 440 55 33			S					1			
	[05]		CAP									
	000 995 81 44			S					1			

1430

SENSOR

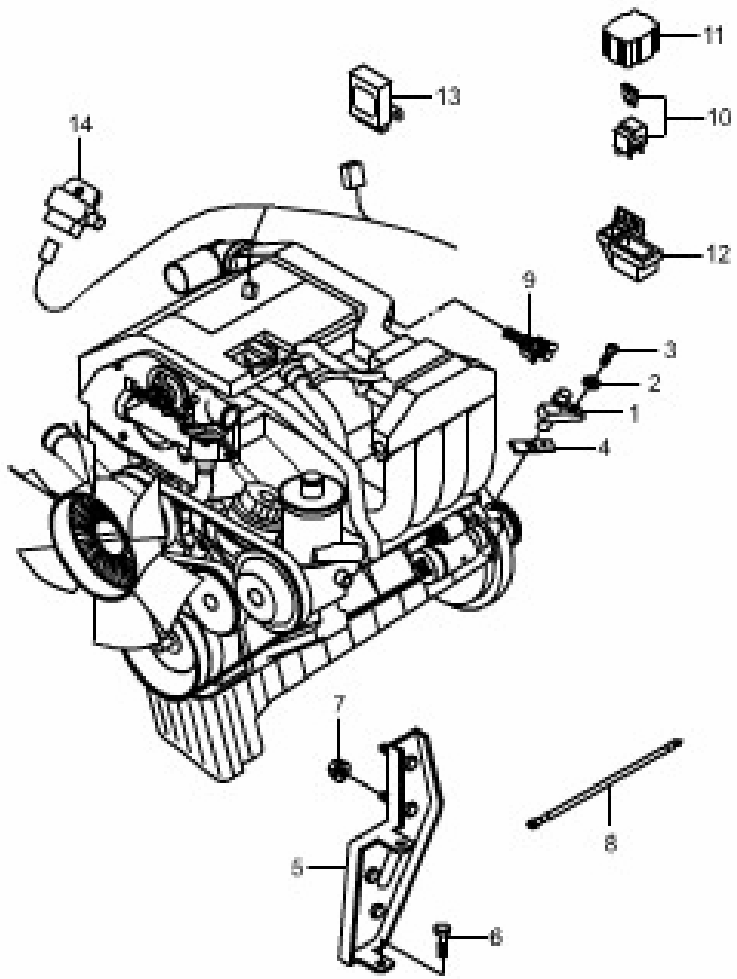

KEY NO.		PART NAME										
			ENGINE							APPLICATION		
ITC	PART NO.	T/M	G23D	G32D			OPTION	L/R	Q'TY	FROM	TO	REMARK
	[01] 162 153 30 28		SENSOR-CRANKSHAFT POSITION S	S					1			
	[02] 104 997 00 48		RING-O S	S					1			
	[03] 914021 006016		BOLT-COMB. S	S					1			M6X14A 8.8 L8451.21
	[04] 103 011 02 52		PLATE-DISTANCE S	S					1			
	[05] 104 150 06 73		BRACKET S						1			
	[06] 00033 006175		BOLT-COMB. S						1			M6X14A 8.8 L8451.21
	[07] 913017 006000		NUT S						2			
	[08] 162 440 30 41		STRIP ASSY-GROUND S						1			
	[09] 000 542 28 18		SENSOR-AIR TEMPERATURE S	S					1			

1430

SENSOR

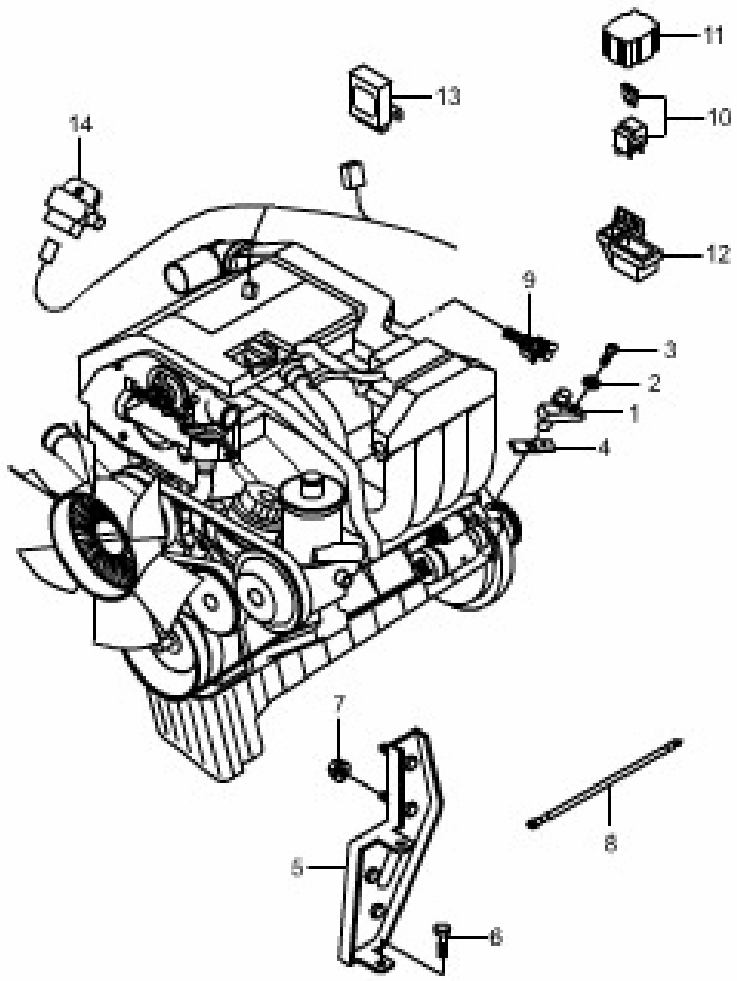

KEY NO.		PART NAME										
			ENGINE							APPLICATION		
ITC	PART NO.	T/M	G23D	G32D			OPTION	L/R	Q'TY	FROM	TO	REMARK
	[10] 001 542 96 19		RELAY-FUEL PUMP S	S					1			
	[11] 000 542 18 81		COVER-FUEL PUMP RELAY S	S					1			
	[12] 161 545 30 40		BRACKET-FUEL PUMP RELAY S	S					1			
	[13] 162 540 30 45		RELAY-OVERVOLTAGE PROTECTION S	S					1			

1440

IGNITION COIL - G23D

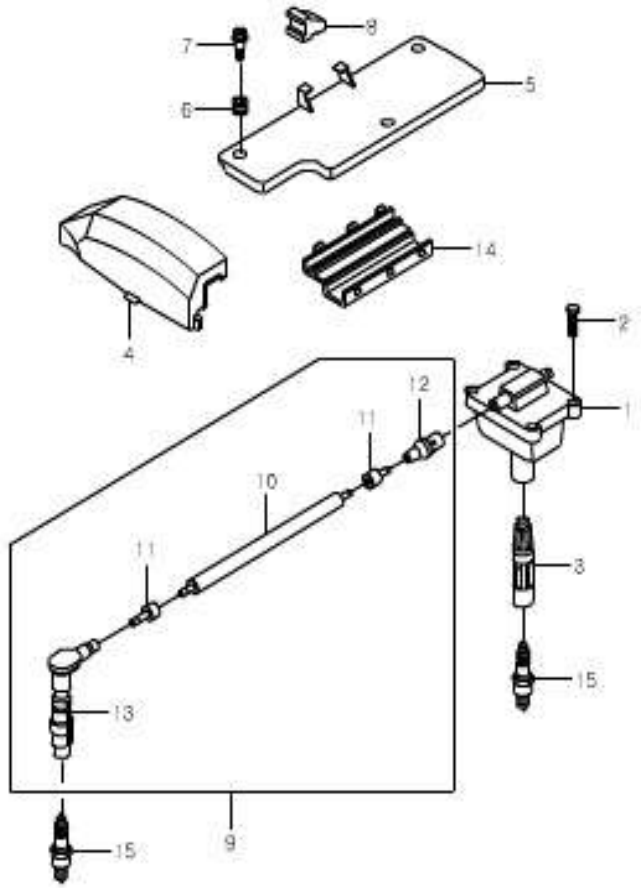

KEY NO.		PART NAME										
			ENGINE							APPLICATION		
ITC	PART NO.	T/M	G23D	G32D			OPTION	L/R	Q'TY	FROM	TO	REMARK
	[01] 161 158 31 03		COIL-IGNITION S						2			DENSO PS
	[02] 914007 006025		BOLT S						4			M6X25A-8.8 DBL8451.21
	[03] 161 159 31 42		COUPLING PLUG S						2			
	[04] 161 158 30 85		COVER-PROTECTION S						1			
	[05] 161 150 31 75		COVER ASSY-IGNITION COIL S						1			
	[06] 111 010 00 73		ADAPTER ASSY S						3			
	[07] 111 018 00 71		SCREW S						3			
	[08] 111 141 02 87		RUBBER MTG S						2			
	[09] 161 150 31 18		IGNITION CABLE ASSY S						2			L=450MM

1440

IGNITION COIL - G23D

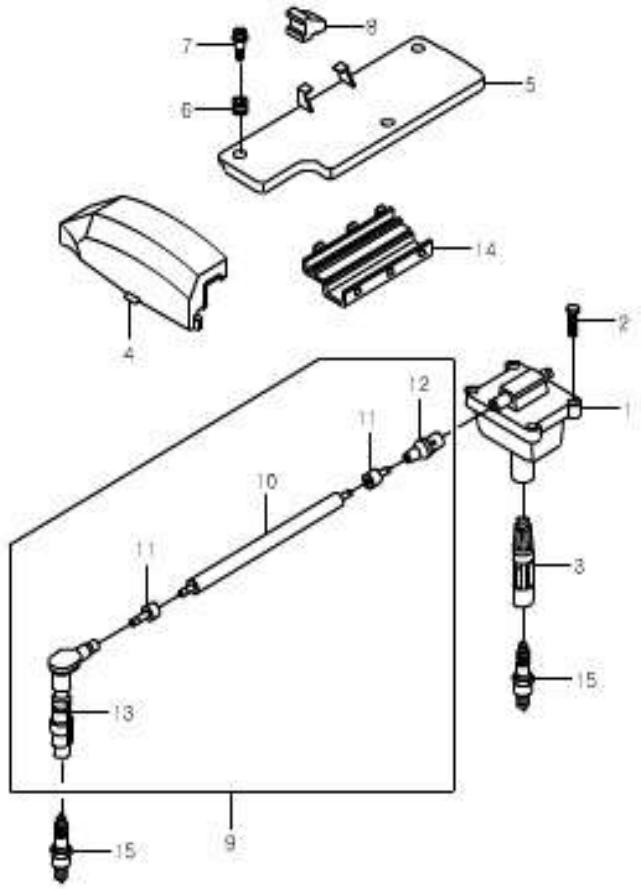

KEY NO.		PART NAME										
			ENGINE							APPLICATION		
ITC	PART NO.	T/M	G23D	G32D			OPTION	L/R	Q'TY	FROM	TO	REMARK
	[10] 111 159 01 18		CABLE-IGNITION S						2			
	[11] 000 159 14 38		SCREW S						4			
	[12] 000 159 38 42		CONNECTOR-IGNITION COIL S						2			
	[13] 000 156 71 10		CONNECTOR-SPARK PLUG S						2			
	[14] 111 159 09 40		BRACKET IGNITION S						2			
	[15] 003 159 67 03		SPARK PLUG S						4			BOSCH F8 DC4

1441

IGNITION COIL - G32D

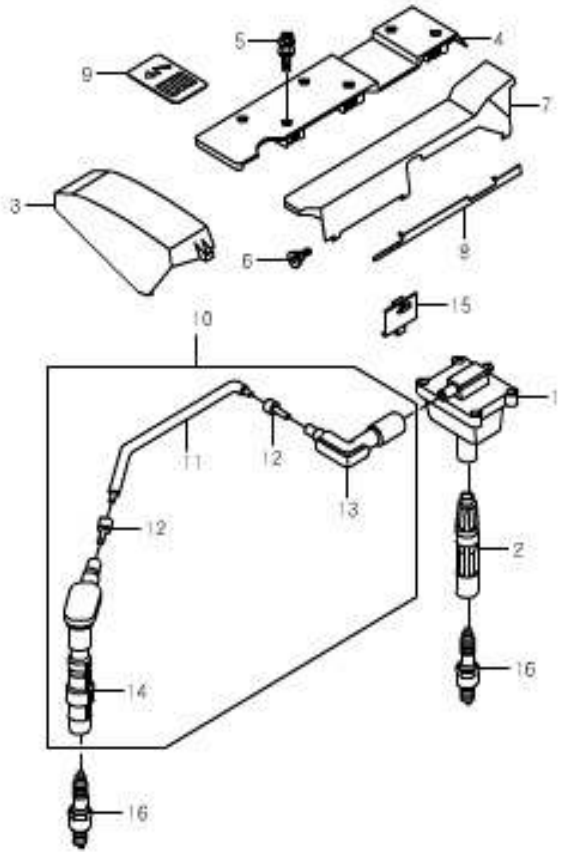

KEY NO.		PART NAME										
			ENGINE							APPLICATION		
ITC	PART NO.	T/M	G23D	G32D			OPTION	L/R	Q'TY	FROM	TO	REMARK
	[01] 000 158 75 03		IGNITION COIL S						1			BOSCH
	[02] 161 159 31 42		COUPLING PLUG S						3			
	[03] 162 158 31 85		COVER ASSY PROTECTION S						1			
	[04] 162 150 40 75		COVER ASSY IGNITION COIL S						1			
	[05] 914035 006011		BOLT-COMB. S						7			M6X60A L8440.41
	[06] 104 016 03 38		BRKT S						1			
	[07] 104 159 04 25		GUIDE ASSY UPR PART CABLE S						1			
	[08] 162 159 30 46		COVER IGNITION CABLE S						1			
	[09] 123 584 93 21		LABEL WARNING S						1			

1441

IGNITION COIL - G32D

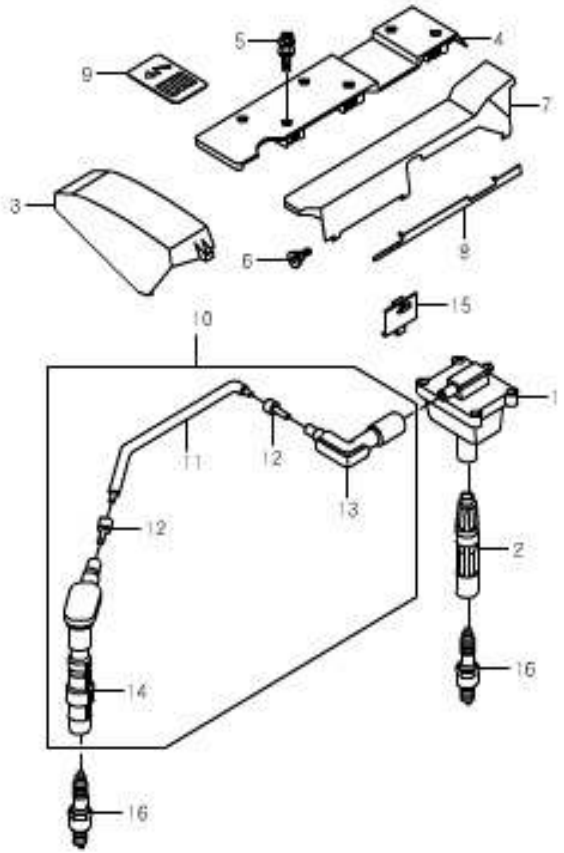

KEY NO.		PART NAME										
			ENGINE							APPLICATION		
ITC	PART NO.	T/M	G23D	G32D			OPTION	L/R	Q'TY	FROM	TO	REMARK
	[10]		IGNITION CABLE ASSY									
	161 150 30 18		S						2			L=650MM
	161 150 31 18		S						2			L=450MM
	[11]		CABLE IGNITION									
	102 159 04 18		S						2			
	111 159 01 18		S						1			
	[12]		SCREW									
	000 159 14 38		S						6			
	[13]		CONNECTOR IGNITION COIL									
	000 159 38 42		S						3			
	[14]		CONNECTOR SPARK PLUG									
	000 156 71 10		S						3			
	000 156 72 10		S						3			
	[15]		BRKT-IGNITION CABLE									
	104 159 26 40		S						2			
	[16]		SPARK PLUG									
	003 159 67 03		S						6			BOSCH F8 DC4

1452

ALTERNATOR

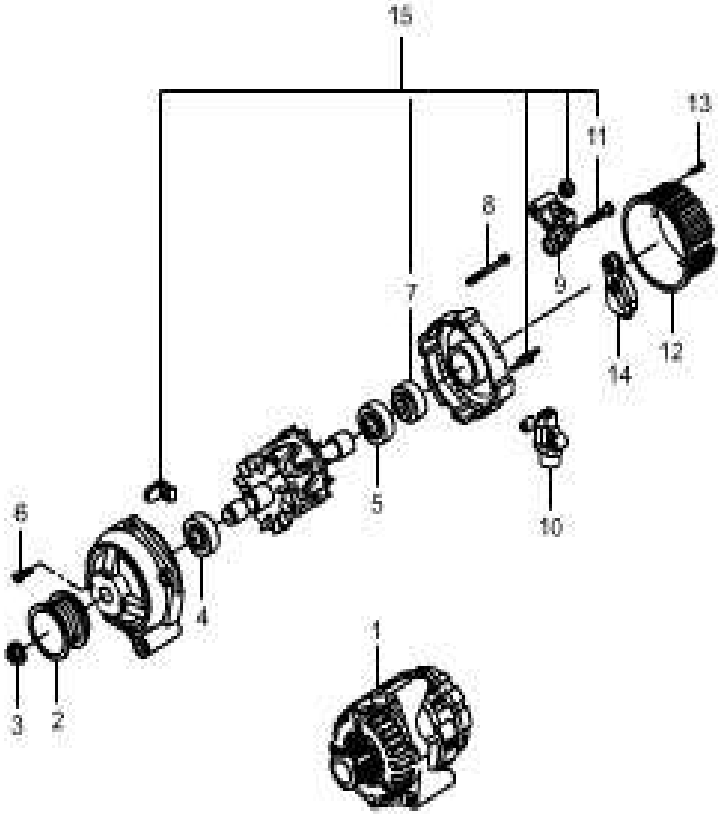

KEY NO.		PART NAME										
			ENGINE							APPLICATION		
I T C	PART NO.	T / M	G 2 3 D	G 3 2 D			OPTION	L / R	Q ' T Y	FROM	TO	REMARK
	[01]		ALTERNATOR ASSY									
	161 154 39 02		S						1			
	162 154 34 02			S					1			
	[02]		PULLEY									
	111 155 04 15		S						1			
	104 155 01 15			S					1			
	[03]		NUT									
	000 990 22 50		S	S					1			
	[04]		BEARING GROOVED BALL									
	007 981 73 25		S						1			
	007 981 89 25			S					1			
	[05]		BEARING GROOVED BALL									
	007 981 02 25		S						1			
	007 981 25 25			S					1			
	[06]		SCREW									
	001 990 29 20			S					4			
	[07]		RING									
	000 154 06 57			S					1			
	[08]		SCREW									
	006 990 55 01		S						4			
	001 990 14 12			S					4			

1452

ALTERNATOR

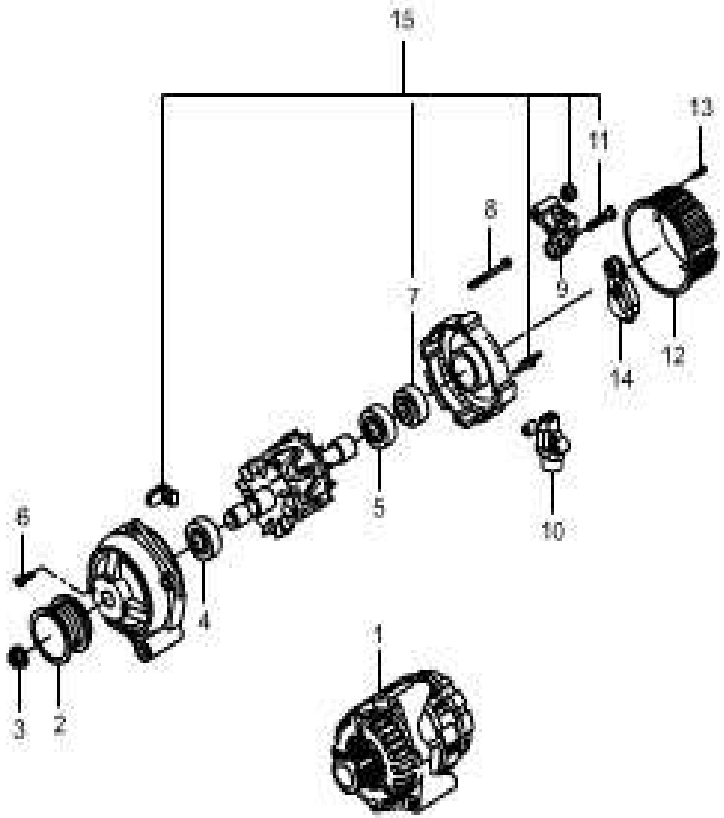

KEY NO.		PART NAME										
			ENGINE							APPLICATION		
ITC	PART NO.	T/M	G23D	G32D			OPTION	L/R	Q'TY	FROM	TO	REMARK
	[09]		REGULATOR FIELD									
	002 154 91 06		S						1			
	002 154 85 06			S					1			
	[10]		REGULATOR FIELD									
	002 154 92 06		S						1			
	[11]		BOLT									
	007985 004151			S					2			
	[12]		RING COVER									
	000 154 14 40		S						1			
	000 154 28 04			S					1			
	[13]		SCREW									
	006 990 35 01			S					3			
	[14]		CONDENSOR									
	001 156 90 01		S						1			
	[15]		REPAIR KIT ALTERNATOR									
	000 150 00 50		S						1			

1453

ALTERNATOR MOUNTING

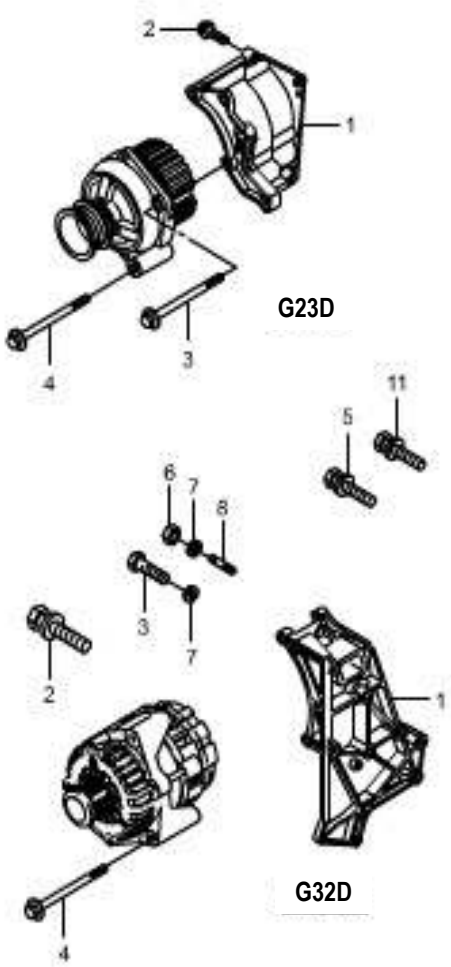

KEY NO.		PART NAME										
			ENGINE							APPLICATION		
ITC	PART NO.	T/M	G23D	G32D			OPTION	L/R	Q'TY	FROM	TO	REMARK
	[01]		BRKT-ALTERNATOR									
	111 155 01 35		S						1			
	162 155 30 35			S					1			
	[02]		BOLT-COMB.									
	914005 008029		S	S					3			M8X40 8.8 L8451.21
	[03]		BOLT-COMB.									
	914010 008027		S						1			M8X85 8.8A L8451.21
	914034 008000			S					1			M8X70 8.8 L9451.21
	[04]		BOLT-COMB.									
	914010 010021		S						2			M10X90
	914126 010068			S					2			M10X100
	[05]		BOLT									
	914007 008017			S					1			
	[06]		NUT									
	000934 008045			S					1			M8X8
	[07]		WASHER									
	000137 008202			S					1			
	[08]		BOLT-COMB.									
	914020 008004			S					3			M8X30 L8451.21

1462

STATING MOTOR

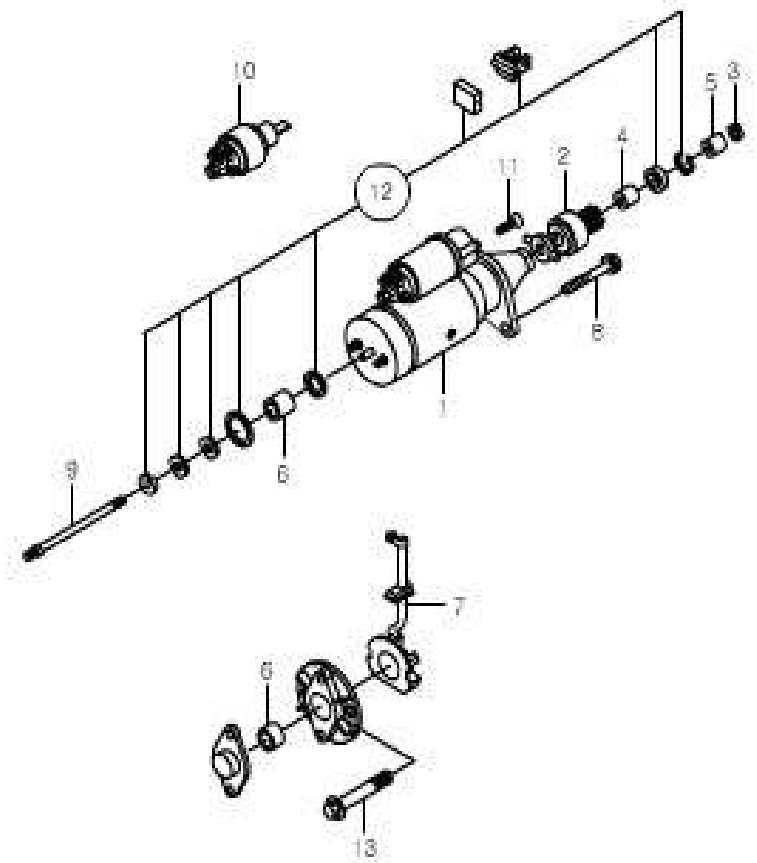

KEY NO.		PART NAME										
			ENGINE							APPLICATION		
I T C	PART NO.	T / M	G 2 3 D	G 3 2 D			OPTION	L / R	Q ' T Y	FROM	TO	REMARK
	[01]		STARTER									
	161 151 34 01		S						1			
	162 151 34 01			S					1			
	[02]		PINION									
	000 151 12 13		S						1			
	000 151 98 13			S					1			
	[03]		BEARING NEEDLE									
	000 981 21 10		S						1			
	[04]		BUSH									
	000 151 64 50		S	S					2			
	[05]		BUSH									
	000 151 37 50			S					1			
	[06]		BUSH									
	000 151 68 50		S						1			
	000 151 80 50			S					1			
	[07]		BRUSH SET CARBON									
	000 151 27 14		S						1			
	000 151 92 14			S					1			
	[08]		BOLT									
	914010 010027		S	S					2			

1462

STATING MOTOR

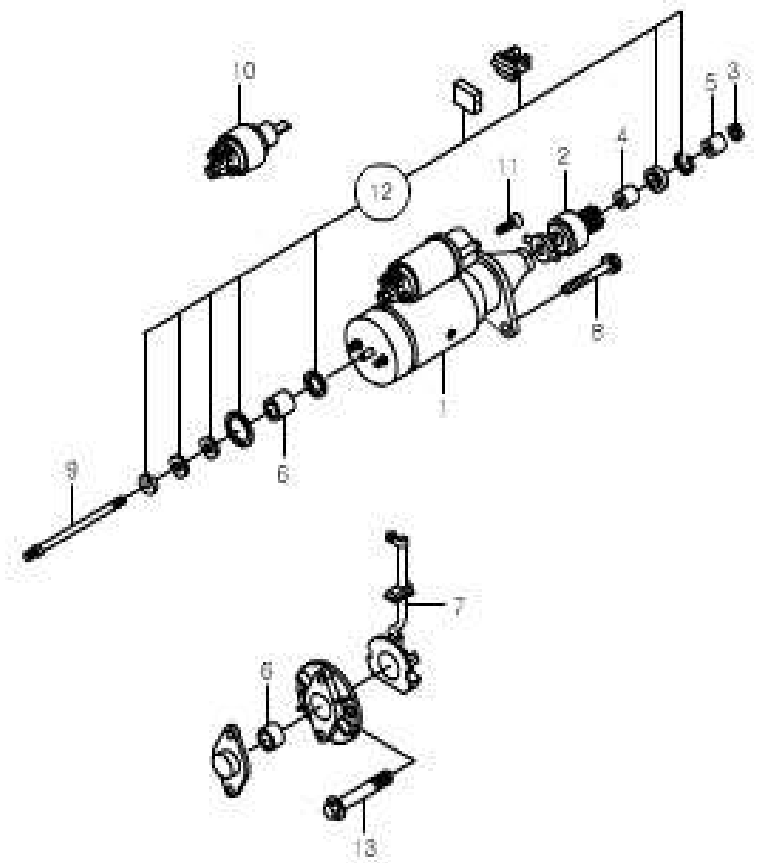

KEY NO.		PART NAME										
			ENGINE							APPLICATION		
ITC	PART NO.	T/M	G23D	G32D			OPTION	L/R	Q'TY	FROM	TO	REMARK
	[09]		STUD									
	000 990 94 05		S	S					2			
	[10]		SWITCH MAGNET									
	001 152 27 10		S						1			
	000 152 98 10			S					1			
	[11]		SCREW									
	000 990 76 30		S	S					3			
	[12]		REPAIR KIT ARMATURE									
	000 151 36 15		S	S					1			
	[13]		SCREW									
	006 990 34 01		S						1			

1490

EMISSION MODULE

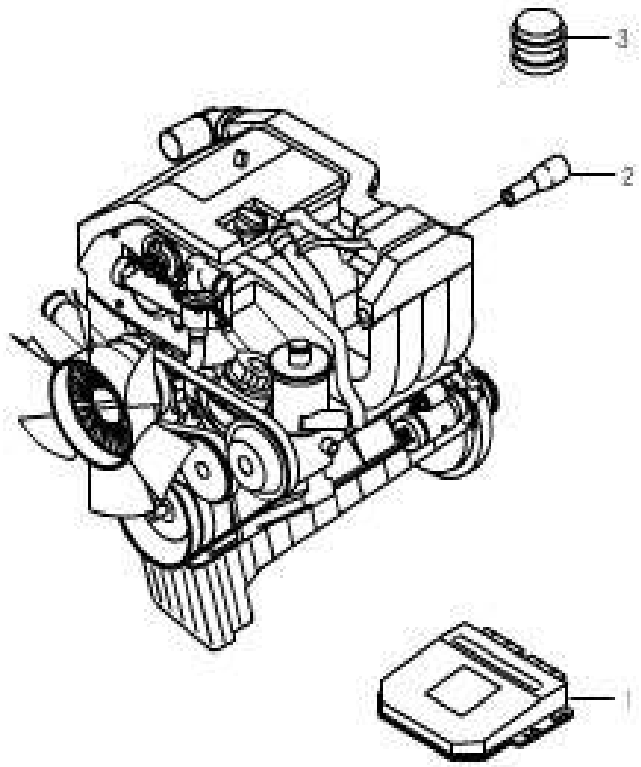

KEY NO.		PART NAME										
			ENGINE							APPLICATION		
ITC	PART NO.	T/M	G23D	G32D			OPTION	L/R	Q'TY	FROM	TO	REMARK
	[01]		ENGINE CONTROL UNIT									
	EA600D0010		S						1			
	EA600D0020			S					1			
	[02]		FILTER CAP									
	117 078 09 81		S	S					1			
	[03]		PLUG HFM ADJUST									
	025 545 50 28		S	S					1			

1521

COOLING SYSTEM - G23D

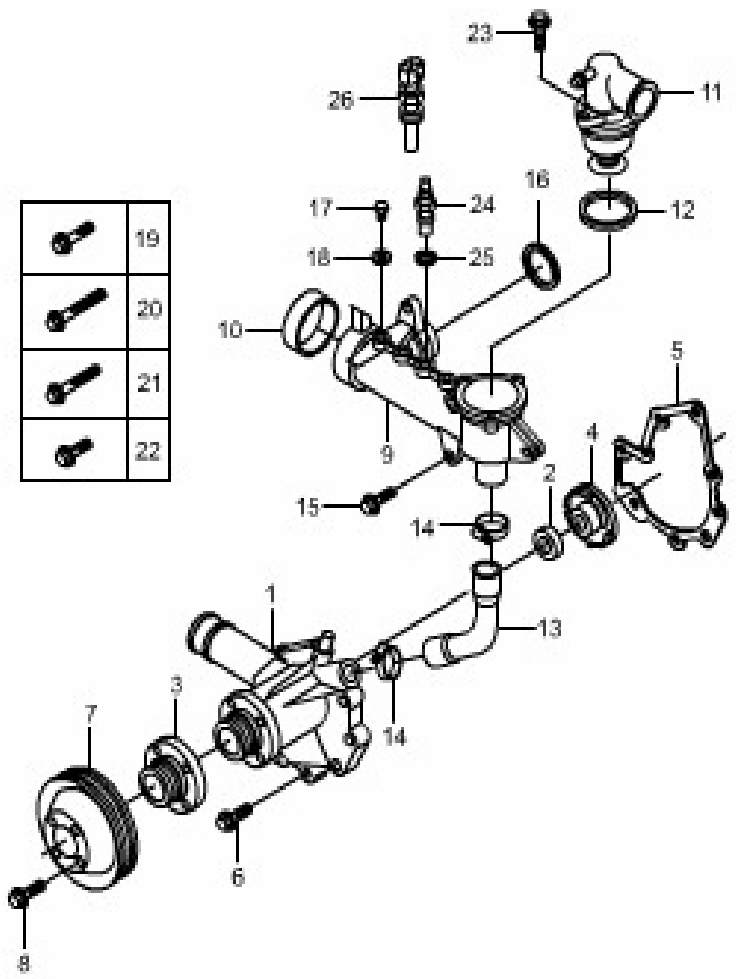

KEY NO.		PART NAME										
			ENGINE							APPLICATION		
ITC	PART NO.	T/M	G23D	G32D			OPTION	L/R	Q'TY	FROM	TO	REMARK
	[01]		PUMP ASSY-WATER									
	161 200 37 01		S						1			
	[02]		SEAL-CASSETTE									
	000 201 98 19		S						1			
	[03]		FLANGE									
	111 201 00 39		S						1			
	[04]		IMPELLER-WATER PUMP									
	103 201 00 07		S						1			
	[05]		GASKET-WATER PUMP									
	161 201 32 80		S						1			
	[06]		BOLT									
	914005 006041		S						4			M6X45
	914005 006038		S						1			M6X95
	914005 006009		S						4			M6X25
	914010 008027		S						2			M6X85
	[07]		PULLEY-WATER PUMP									
	161 202 31 10		S						1			
	[08]		BOLT									
	914021 006001		S						4			M6X12

1521

COOLING SYSTEM - G23D

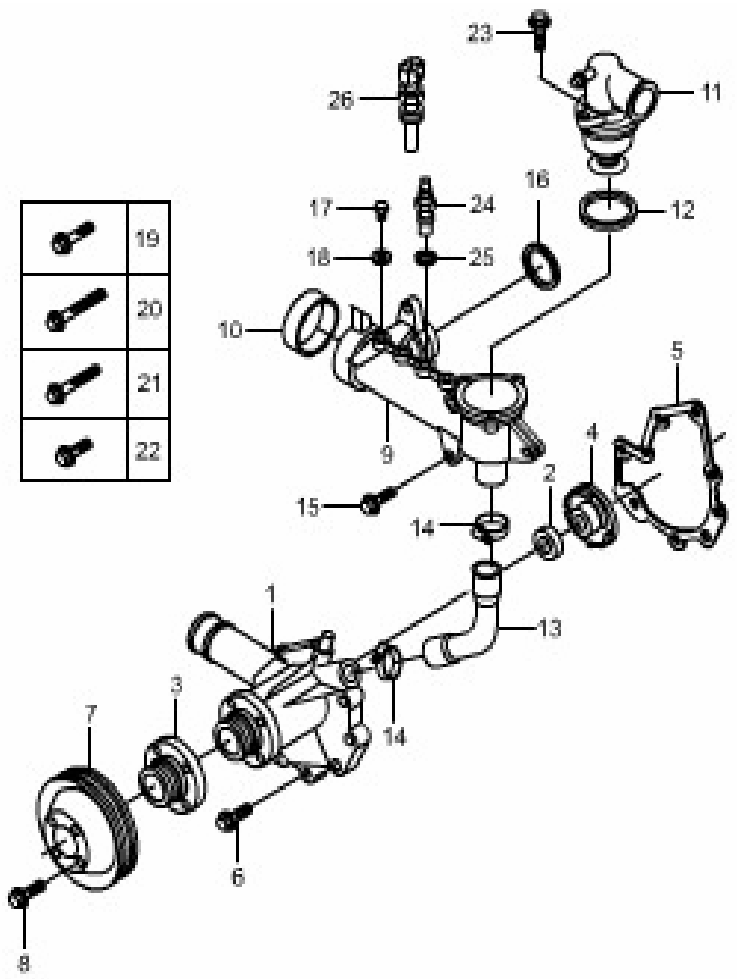

KEY NO.		PART NAME											
ITC	PART NO.	T/M	ENGINE G23D	ENGINE G32D	ENGINE	ENGINE	OPTION	L/R	Q'TY	APPLICATION FROM	APPLICATION TO	REMARK
	[09] 161 200 32 15		HOUSING ASSY-THERMOSTAT S						1			
	[10] 000443 045002		PLUG-EXPANSION S						1			
	[11] 161 203 37 75		THERMOSTAT-COOLANT S						1			
	[12] 015 997 23 48		RING-O S						1			
	[13] 111 203 02 82		HOSE-COOLANT S						1			
	[14] 916026 028000		CLIP S						2			
	[15] 914010 008033		BOLT S						1			M8X75
	[16] 021 997 07 48		RING-O S						1			
	[17] 007604 010102		SCREW S						1			M10

1521

COOLING SYSTEM - G23D

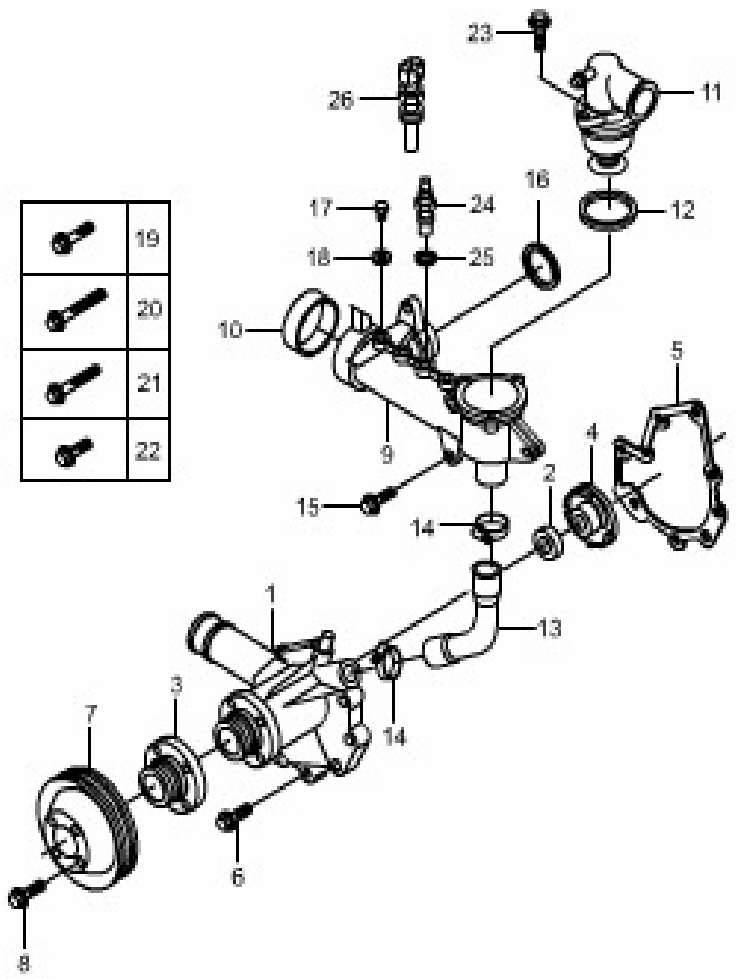

KEY NO.		PART NAME										
			ENGINE							APPLICATION		
ITC	PART NO.	T/M	G23D	G32D			OPTION	L/R	Q'TY	FROM	TO	REMARK
	[18] 007603 010101		RING-SEAL S						1			
	[19] 914005 006041		BOLT S						1			M6X45
	[20] 161 990 31 01		BOLT S						1			M6X95
	[21] 914010 008027		BOLT S						2			M8X85
	[22] 914005 006009		BOLT S						4			M6X25
	[23] 914005 006038		BOLT S						2			M6X95
	[24] 661 542 30 17		SENSOR-WATER TEMP S						1			
	[25] 007603 014100		RING-SEAL S						1			A10X18
	[26] 661 542 31 17		SENSOR-WATER TEMP DOUBLE S						1			

1522

COOLING SYSTEM - G32D

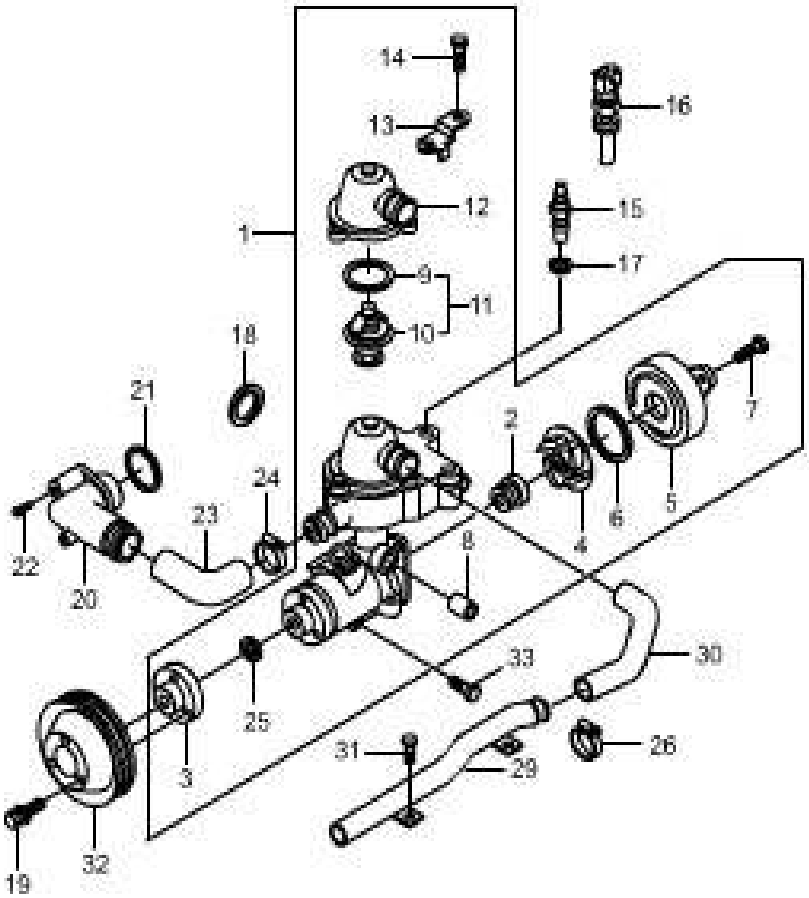

KEY NO.		PART NAME										
			ENGINE							APPLICATION		
ITC	PART NO.	T/M	G23D	G32D			OPTION	L/R	Q'TY	FROM	TO	REMARK
	[01] 162 200 49 01		PUMP ASSY-WATER S						1			
	[02] 000 201 98 19		SEAL-CASSETTE S						1			
	[03] 103 201 01 39		FLANGE-WATER PUMP S						1			
	[04] 103 201 00 07		IMPELLER-WATER PUMP S						1			
	[05] 103 201 01 01		HOUSING-SPIRAL S						1			
	[06] 011 997 37 48		RING-O S						1			
	[07] 6612013539		BOLT S						3			M6X20
	[08] 601 992 04 25		PIN-SPRING S						2			
	[09] 015 997 23 48		RING-O S						1			

1522

COOLING SYSTEM - G32D

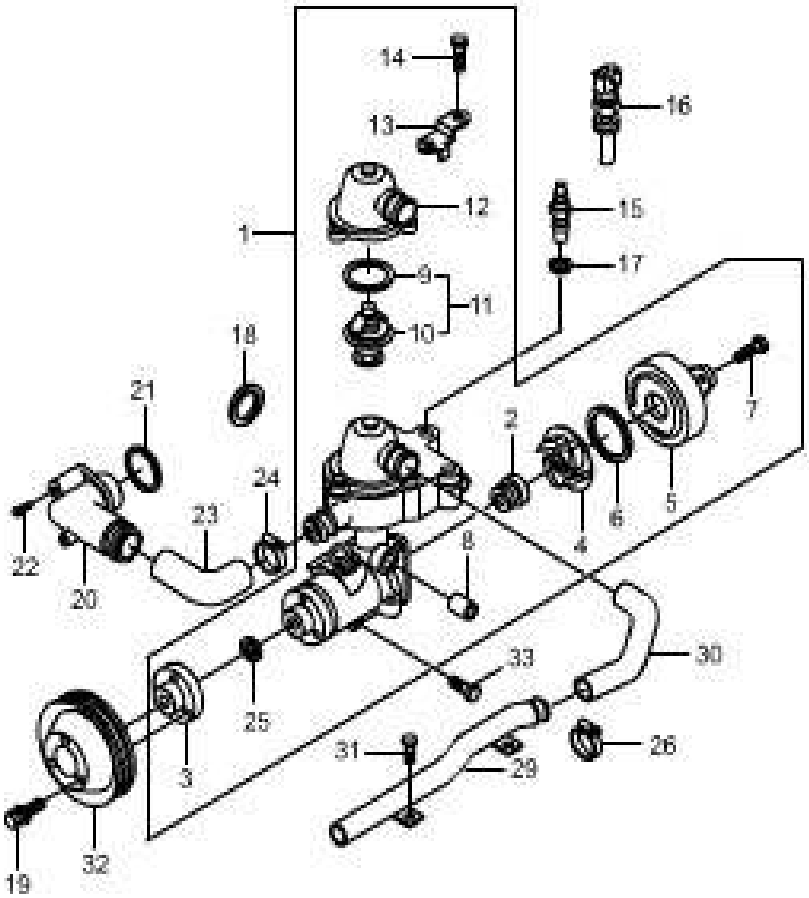

KEY NO.		PART NAME										
			ENGINE							APPLICATION		
ITC	PART NO.	T/M	G23D	G32D			OPTION	L/R	Q'TY	FROM	TO	REMARK
	[10] 002 203 76 75		THERMOSTAT-COOLANT S						1			
	[11] 110 200 05 15		THERMOSTAT ASSY-COOLANT S						1			
	[12] 162 203 32 74		PORT-COOLANT OTLT S						1			
	[13] 104 159 27 40		BRACKET-COOLANT COVER S						1			
	[14] 661 201 33 39		BOLT S						3			M6X25
	[15] 661 542 30 17		SENSOR-WATER TEMP S						1			
	[16] 161 542 31 17		SENSOR ASSY-COOLANT S						1			
	[17] 007603 014100		RING-SEAL S						3			A14X18
	[18] 011 997 24 48		RING-O S						1			

1522

COOLING SYSTEM - G32D

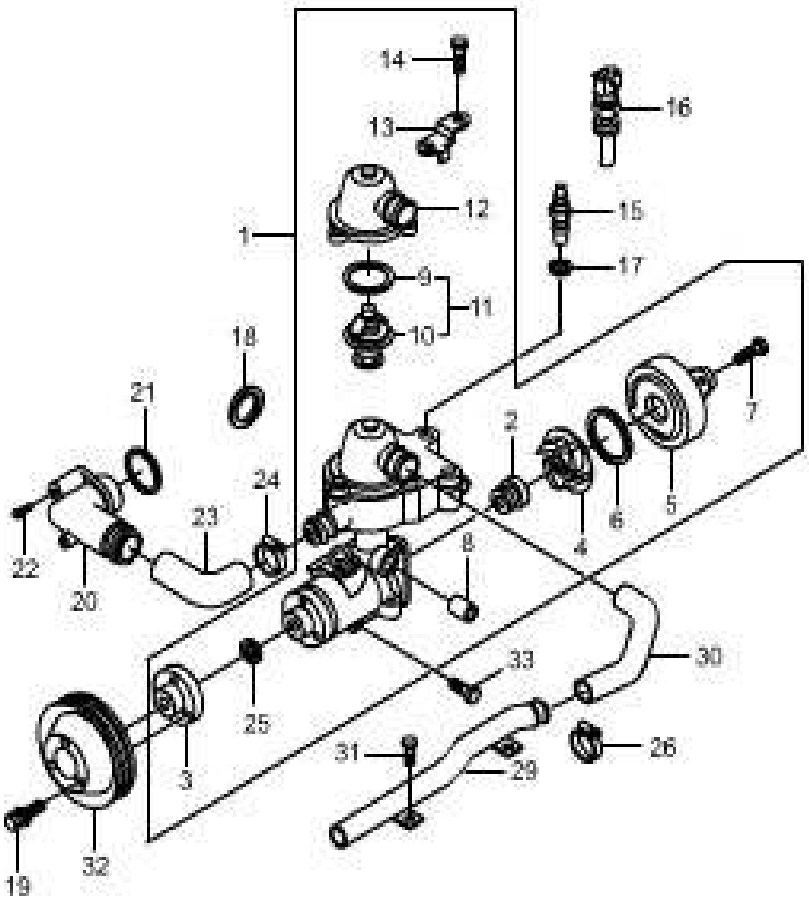

KEY NO.		PART NAME										
ITC	PART NO.	T/M	ENGINE G23D	ENGINE G32D	ENGINE	ENGINE	OPTION	L/R	Q'TY	APPLICATION FROM	APPLICATION TO	REMARK
	[19] 914008 008009		BOLT S						3			M8X14
	[20] 104 203 04 31		PORT-COOLANT OTLT S						1			
	[21] 017 997 23 48		RING-O S						1			
	[22] 000912 008060		BOLT S						2			M8X100
	[23] 104 203 04 82		HOSE S						1			
	[24] 916026 036000		CLIP S						2			
	[25] 012 997 51 48		RING-O S						1			
	[26] 946 572 40 07		CLIP S						2			
									2			

1522

COOLING SYSTEM - G32D

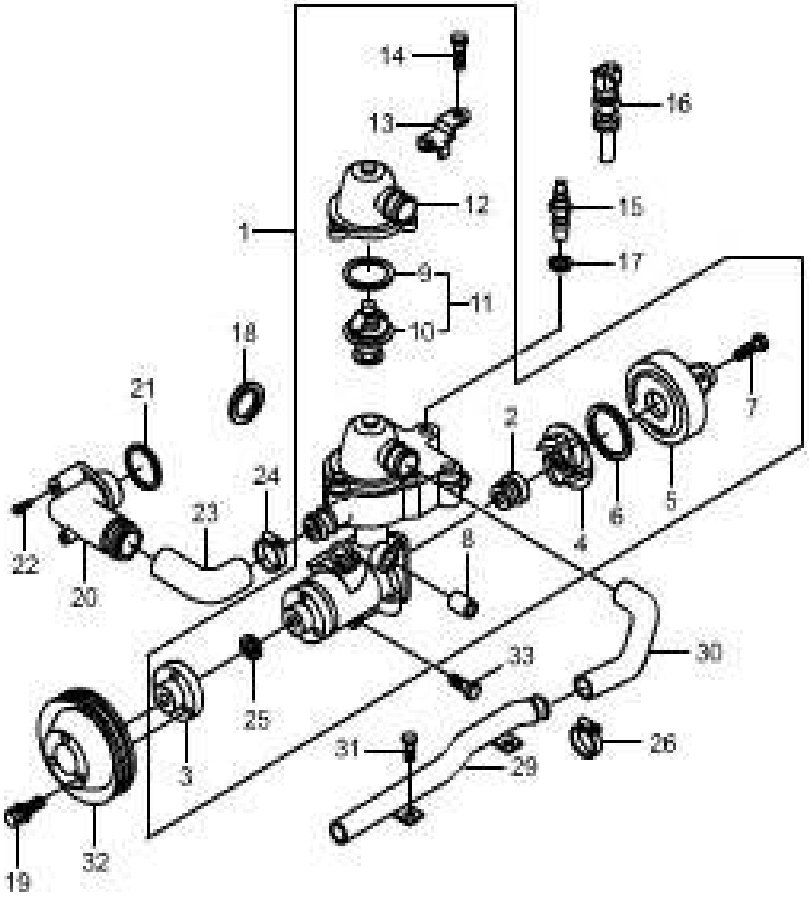

KEY NO.		PART NAME										
			ENGINE							APPLICATION		
ITC	PART NO.	T/M	G23D	G32D			OPTION	L/R	Q'TY	FROM	TO	REMARK
	[27] 017 997 23 48		RING-O S						1			
	[28] 000933 006175		BOLT S						2			M6X16
	[29] 162 200 33 52		PIPE ASSY-HOT WATER INLET S						1			
	[30] 162 203 32 82		HOSE-HEATER PIPE S						1			
	[31] 000933 006207		BOLT S						2			M6X14
	914005 008011		S						2			M8X14
	[32] 162 202 30 10		PULLEY-WATER PUMP S						1			
	[33] 914008 008009		BOLT S						3			
	[34] 104 203 00 38		FLANGE-COOLANT PIPE S						1			

1531

OIL PAN & PUMP - G23D

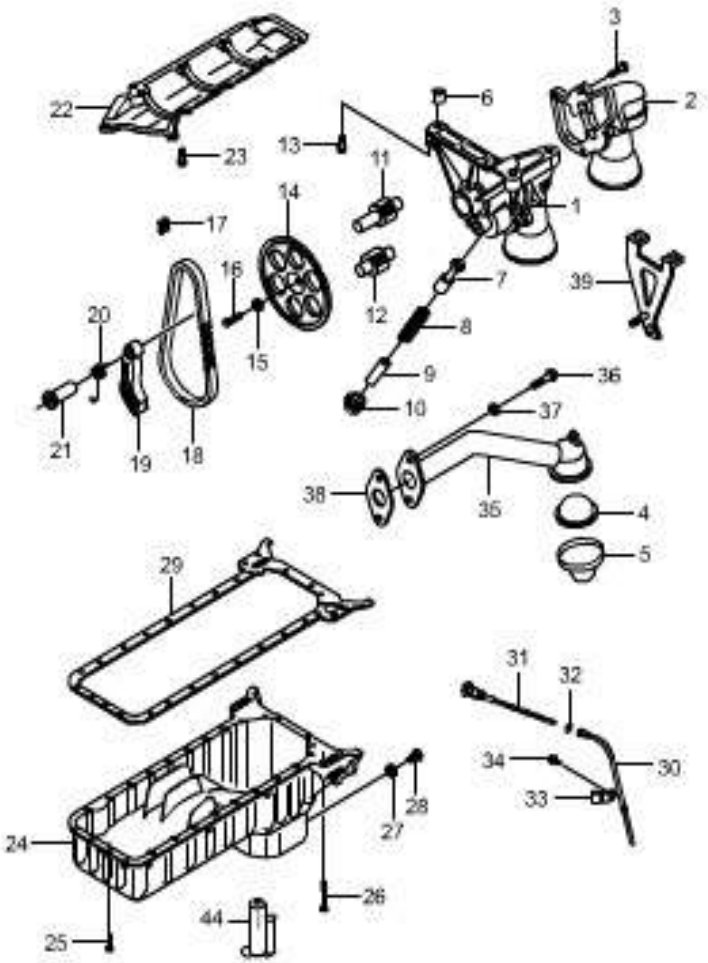

KEY NO.		PART NAME										
			ENGINE							APPLICATION		
I T C	PART NO.	T / M	G 2 3 D	G 3 2 D			OPTION	L / R	Q ' T Y	FROM	TO	REMARK
	[01] 161 180 38 01		PUMP ASSY-OIL S						1			
	[02] 1611813020		COVER-OIL PUMP S						1			
	[03] 914005 006005		BOLT S						4			M6X20
	[04] 601 180 01 55		SCREEN ASSY-OIL PUMP S						1			
	[05] 661 186 01 01		BASKET S						1			
	[06] 601 992 04 25		PIN-SPRING S						2			
	[07] 661 181 31 42		PISTON-OIL PUMP RELIEF VALVE S						1			
	[08] 601 993 08 01		SPRING S						4			
	[09] 601 181 01 74		PIN-OIL PUMP RELIEF VALVE S						1			

1531

OIL PAN & PUMP - G23D

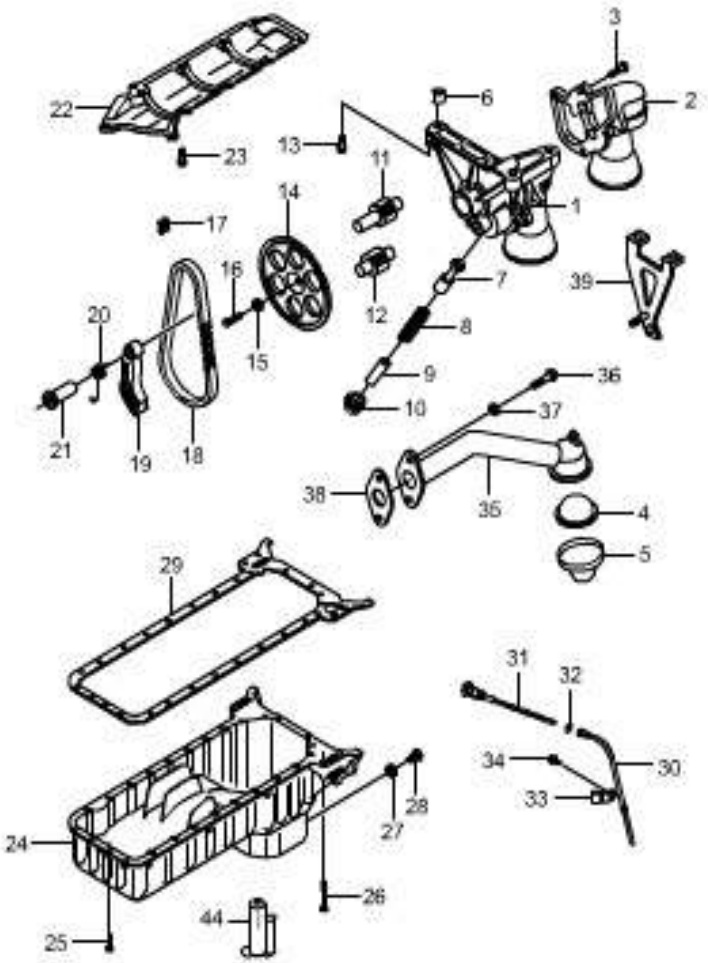

KEY NO.		PART NAME										
			ENGINE							APPLICATION		
ITC	PART NO.	T/M	G23D	G32D			OPTION	L/R	Q'TY	FROM	TO	REMARK
	[10] 603 181 00 56		PLUG-OIL PUMP RELIEF VALVE S						1			
	[11] 111 180 02 07		SHAFT ASSY-OIL PUMP DRIVE S						1			
	[12] 111 180 00 08		SHAFT ASSY-OIL PUMP DRIVE S						1			
	[13] 914020 008009		BOLT S						3			M8X35
	[14] 603 181 01 12		SPROCKET-OIL PUMP S						1			
	[15] 601 990 09 40		WASHER S						1			
	[16] 000933 008040		BOLT S						1			M8X20
	[17] 000 997 14 98		LINK-OIL PUMP CHAIN LOCK S						1			
	[18] 003 997 73 94		CHAIN-OIL PUMP ROLLER S						1			

1531

OIL PAN & PUMP - G23D

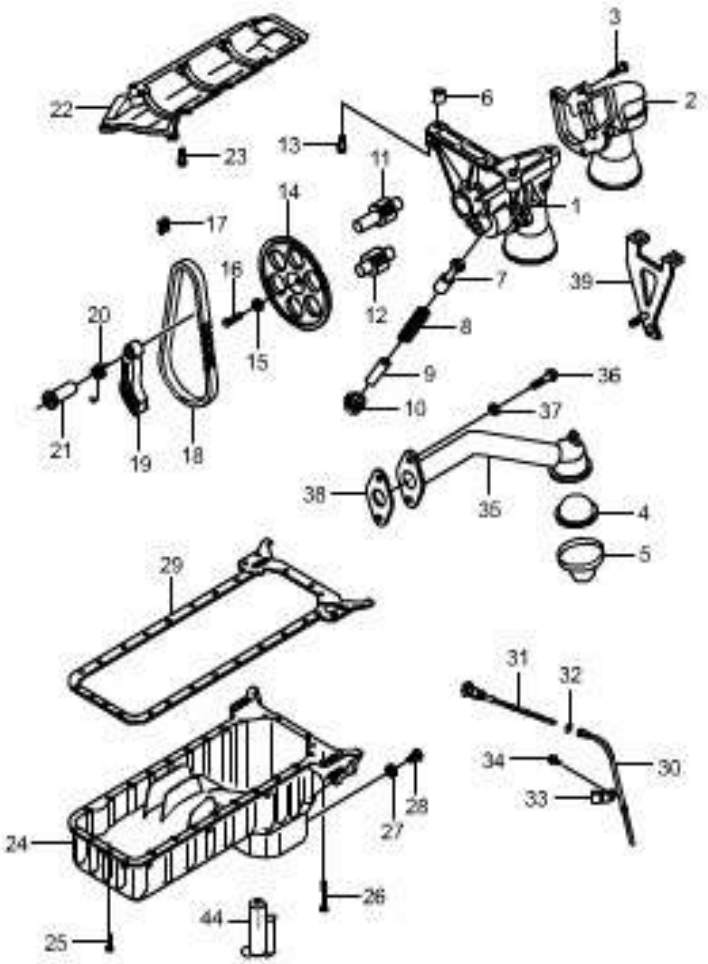

KEY NO.		PART NAME										
			ENGINE							APPLICATION		
ITC	PART NO.	T/M	G23D	G32D			OPTION	L/R	Q'TY	FROM	TO	REMARK
	[19]		TENSIONER ASSY-OIL PUMP CHAIN									
	111 180 00 71		S						1			
	[20]		SPRING-OIL PUMP CHAIN									
	104 993 00 20		S						1			M8X35
	[21]		PIN-CYLINDERICAL									
	111 997 05 10		S						1			
	[22]		PLATE-BAFFLE									
	161 014 30 66		S						1			
	[23]		BOLT									
	914007 006012		S						8			M6X12
	[24]		PAN ASSY-OIL									
	161 010 38 13		S						1			
	[25]		BOLT									
	914005 006005		S						20			M6X20
	914005 006017		S						3			M6X35
	914010 006012		S						3			M6X85
	[26]		BOLT									
	914005 008029		S						4			M6X40
	[27]		WASHER									
	007603 012106		S						1			A12X18

1531

OIL PAN & PUMP - G23D

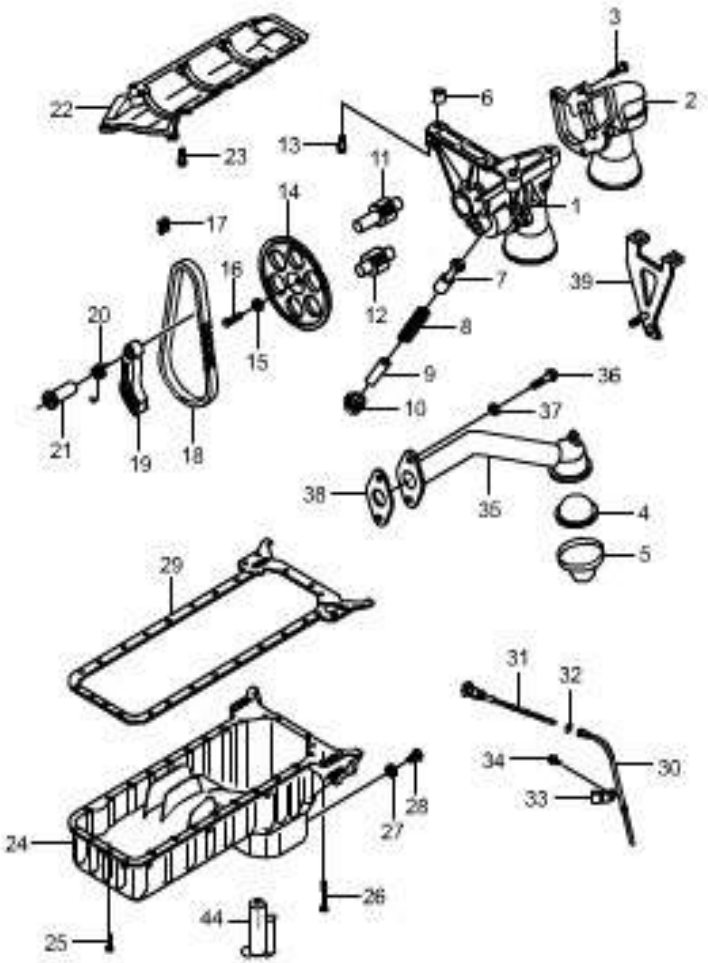

KEY NO.		PART NAME										
			ENGINE							APPLICATION		
ITC	PART NO.	T/M	G23D	G32D			OPTION	L/R	Q'TY	FROM	TO	REMARK
	[28] 662 997 31 30		PLUG-DRAIN S						1			
	[29] 604 014 00 22		GASKET-OIL PAN S						1			
	[30] 161 018 34 16		TUBE-OIL DIPSTICK S						1			
	[31] 161 010 38 72		GAUGE-OIL DIPSTICK S						1			
	[32] 661 997 30 45		RING-O S						1			
	[33] 111 995 03 01		CLAMP S						1			
	[34] 914005 006020		BOLT S						1			M6X16
	[35] 161 180 41 52		STRAINER ASSY-OIL PUMP S						1			
	[36] 914005 006020		BOLT S						2			M6X16

1531

OIL PAN & PUMP - G23D

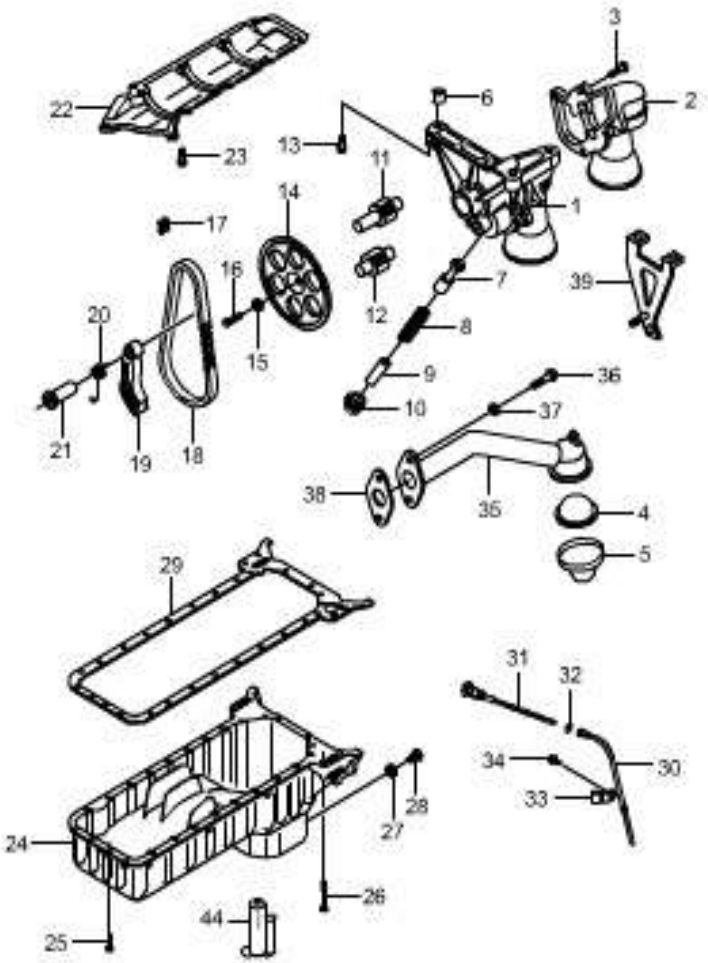

KEY NO.		PART NAME										
			ENGINE							APPLICATION		
ITC	PART NO.	T/M	G23D	G32D			OPTION	L/R	Q'TY	FROM	TO	REMARK
	[37] 161 990 31 40		WASHER S						2			
	[38] 661 186 30 80		GASKET-OIL STRAINER S						1			
	[39] 161 186 32 95		BRACKET-OIL STRAINER S						1			

1532

OIL PAN & PUMP - G32D

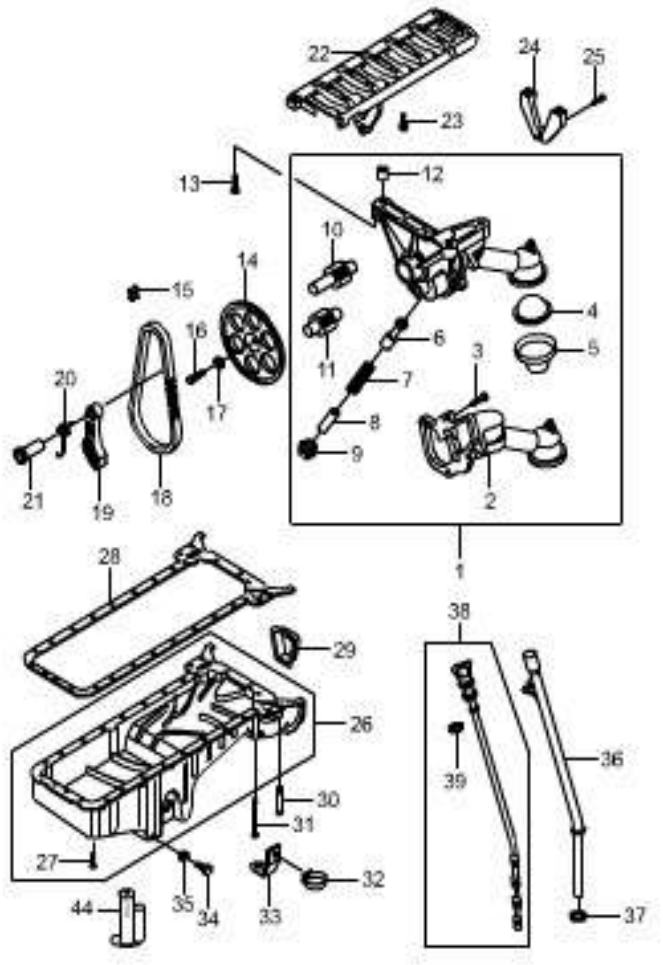

KEY NO.		PART NAME										
ITC	PART NO.	T/M	ENGINE G23D	ENGINE G32D	ENGINE	ENGINE	OPTION	L/R	Q'TY	APPLICATION FROM	APPLICATION TO	REMARK
	[01] 162 180 31 01		PUMP ASSY-OIL S						1			
	[02] 604 181 06 20		COVER-OIL PUMP S						4			
	[03] 914005 006005		BOLT S						6			M6×20 8.8 L8451.21
	[04] 601 180 01 55		SCREEN ASSY-OIL PUMP S						1			
	[05] 162 186 32 01		BASKET S						1			
	[06] 601 181 01 42		PISTON-OIL PUMP RELIEF VALVE S						1			
	661 181 31 42		S						1			
	[07] 603 993 02 01		SPRING S						1			
	[08] 601 181 01 74		PIN-OIL PUMP RELIEF VALVE S						1			
	[09] 603 181 00 56		PLUG-OIL PUMP RELIEF VALVE S						1			

1532

OIL PAN & PUMP - G32D

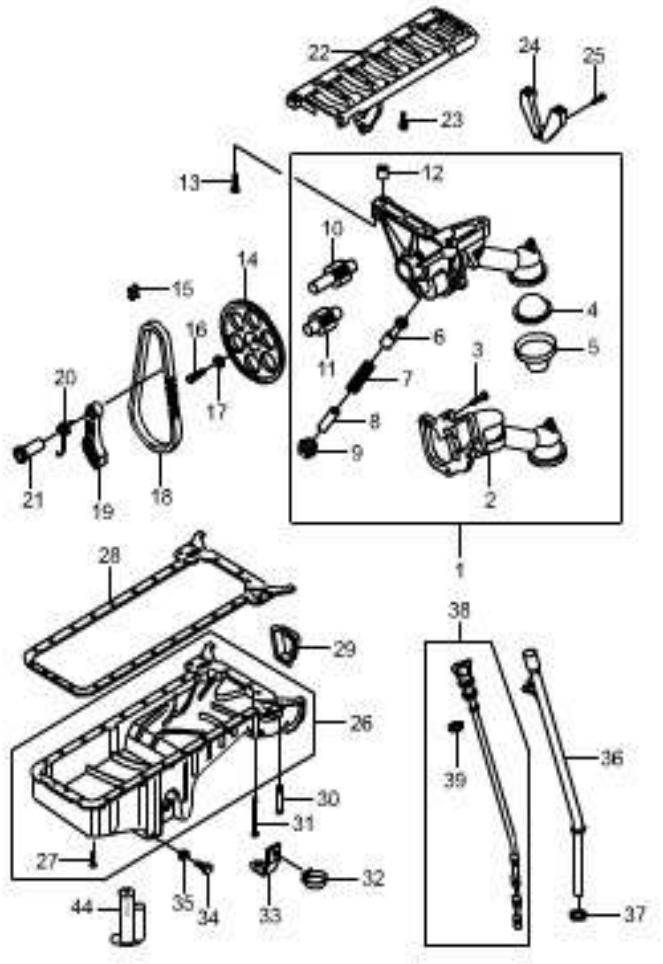

KEY NO.		PART NAME										
ITC	PART NO.	T/M	ENGINE G23D	ENGINE G32D	ENGINE	ENGINE	OPTION	L/R	Q'TY	APPLICATION FROM	APPLICATION TO	REMARK
	[10] 162 180 30 07		SHAFT ASSY-OIL PUMP DRIVE S						1			
	[11] 116 180 02 08		SHAFT ASSY-OIL PUMP DRIVEN S						1			
	[12] 601 992 04 25		PIN-SPRING S						2			
	[13] 914020 008009		BOLT-COMB S						3			M8×35 8.8 L8451.21
	[14] 161 181 30 12		SPROCKET-OIL PUMP S						1			
	[15] 000 997 14 98		LINK-CONNECTOR S						1			
	[16] 000933 008040		BOLT S						1			
	[17] 601 990 09 40		WASHER S						1			
	[18] 003 997 73 94		CHAIN-OIL PUMP S						1			

1532

OIL PAN & PUMP - G32D

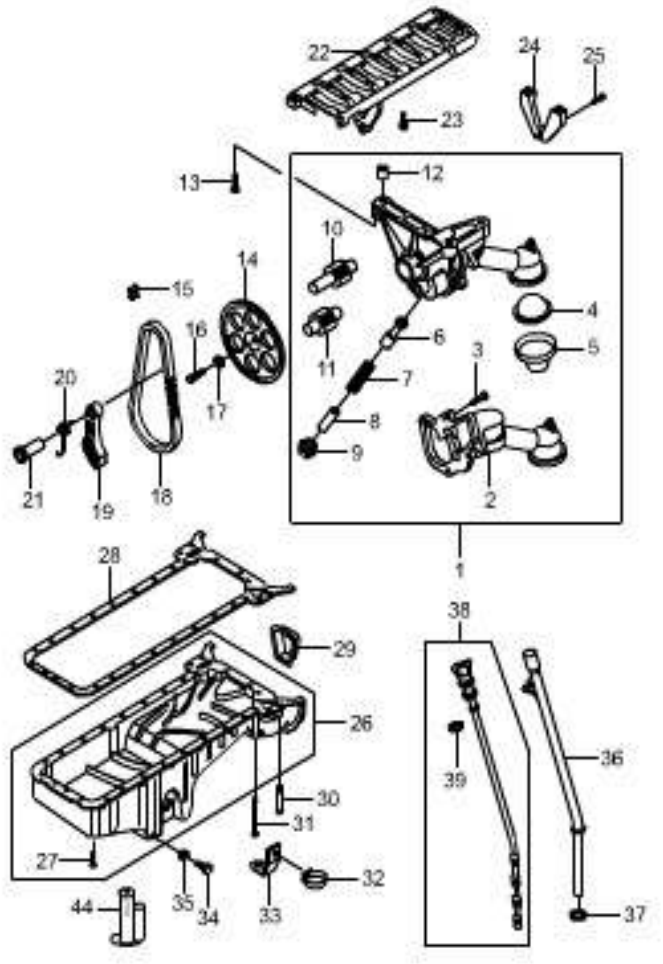

KEY NO.		PART NAME										
ITC	PART NO.	T/M	ENGINE G23D	ENGINE G32D	ENGINE	ENGINE	OPTION	L/R	Q'TY	APPLICATION FROM	APPLICATION TO	REMARK
	[19] 104 181 02 59		TENSIONER-OIL PUMP CHAIN S						1			
	[20] 104 993 00 20		SPRING-OIL PUMP CHAIN S						1			
	[21] 601 181 01 50		BUSHING-OIL PUMP CHAIN S						1			
	[22] 104 014 02 66		PLATE-BAFFLE S						1			
	[23] 914005 006002		BOLT S						12			M6X12
	[24] 104 186 00 95		BRACKET-OIL STRAINER S						1			
	[25] 914005 006020		BOLT-COMB S						1			M6×16 8.8 L8451.21
	[26] 162 010 32 13		PAN ASSY-OIL S						1			
	[27] 914005 008029		BOLT-COMB S						1			M8×40 8.8 L8451.21

1532

OIL PAN & PUMP - G32D

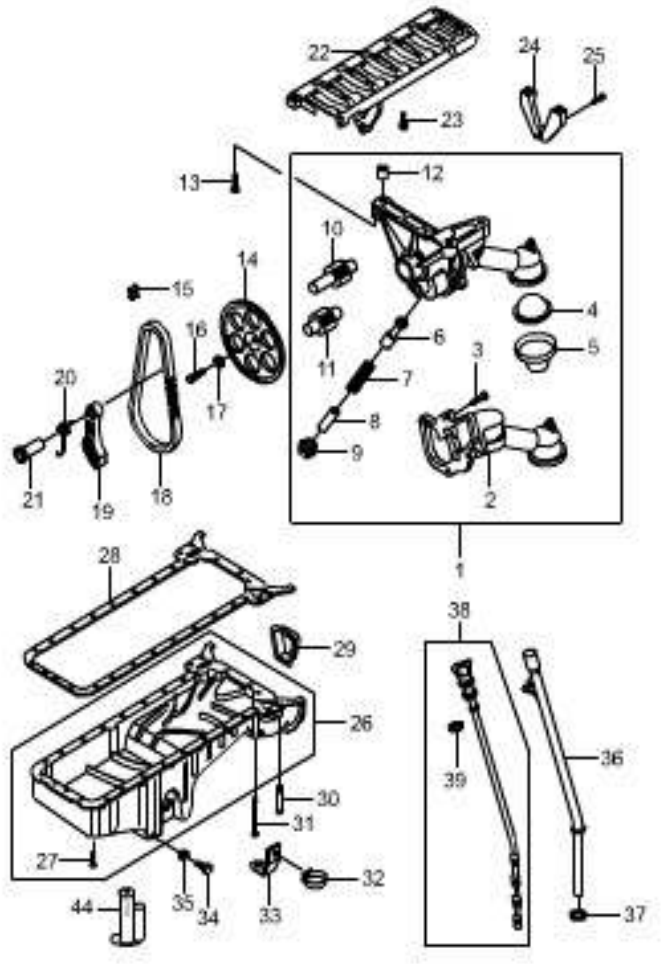

KEY NO. ITC	PART NO.	T/M	ENGINE G23D	ENGINE G32D	ENGINE	ENGINE	OPTION	L/R	Q'TY	APPLICATION FROM	APPLICATION TO	REMARK
	[28] 603 014 08 22		GASKET-OIL PAN S						1			
	[29] 102 014 00 33		COVER-DUST S						1			
	[30] 914005 008029		BOLT-COMB S						4			M8×40 8.8 L8451.21
	[31] 914005 006005		BOLT-COMB S						28			M6×20 8.8 L8451.21
	914010 006008		S						3			M6×35
	914010 006012		S						3			M6×85 8.8A L8451.21
	[32] 661 995 33 44		CLAMP S						2			
	[33] 102 159 26 40		BRACKET S						2			
	[34] 662 997 31 30		PLUG-DRAIN S						1			
	[35] 007603 012106		WASHER S						1			
	[36] 162 010 33 66		TUBE ASSY-OIL DIPSTICK S						1			

1532

OIL PAN & PUMP - G32D

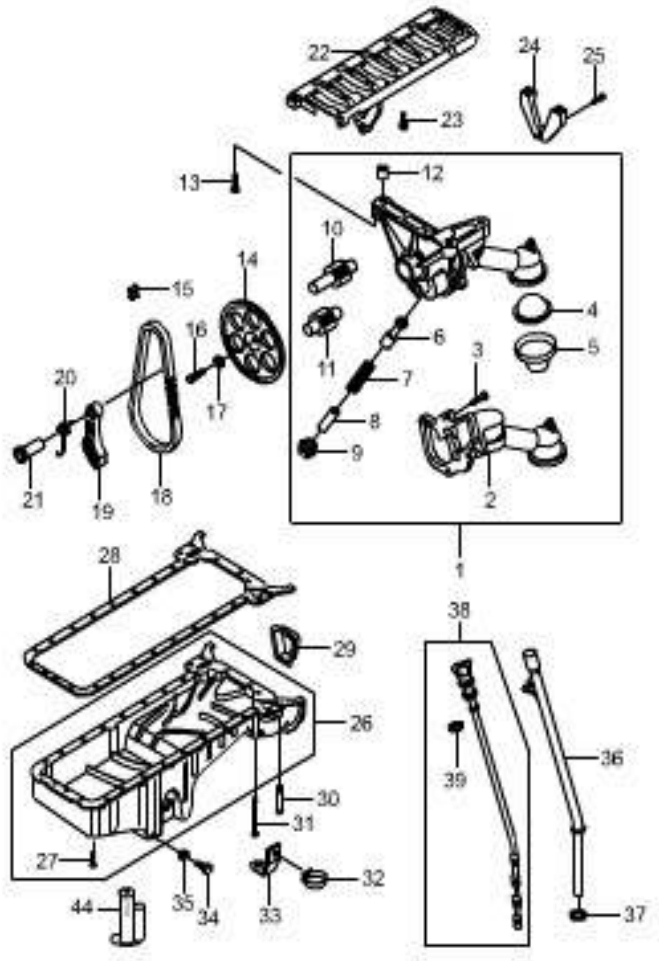

KEY NO.		PART NAME										
			ENGINE							APPLICATION		
ITC	PART NO.	T/M	G23D	G32D			OPTION	L/R	Q'TY	FROM	TO	REMARK
	[37] 017 997 16 48		O-RING S						1			
	[38] 162 010 33 72		GAUGE-OIL DIPSTICK S						1			
	[39] 661 997 30 45		RING-O S						1			

1541

OIL FILTER - G23D

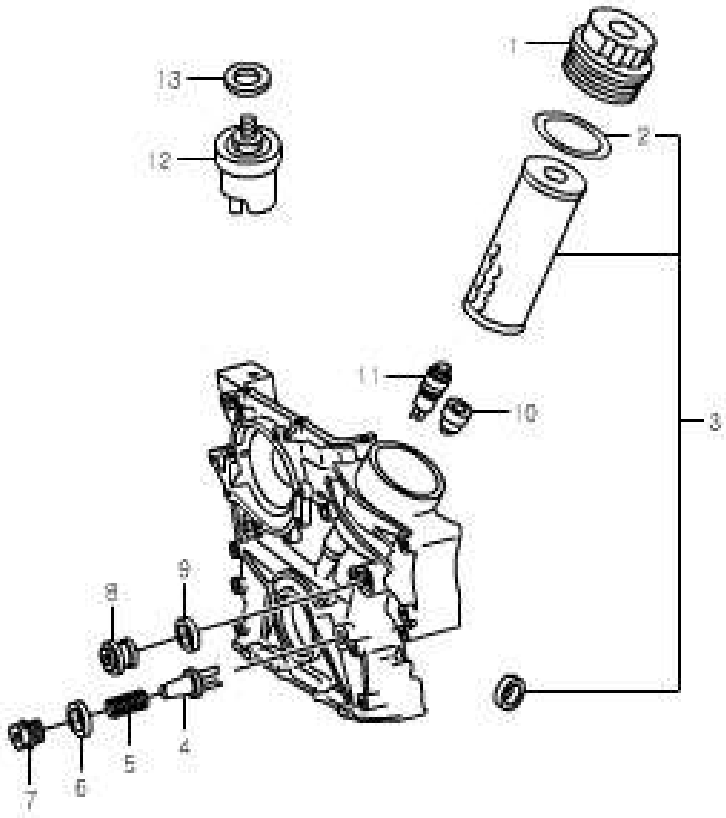

KEY NO.		PART NAME										
ITC	PART NO.	T/M	ENGINE G23D	ENGINE G32D	ENGINE	ENGINE	OPTION	L/R	Q'TY	APPLICATION FROM	APPLICATION TO	REMARK
	[01] 162 184 30 08		COVER-OIL FILTER S						1			
	[02] 017 997 31 48		O-RING S						1			
	[03] 162 184 30 25		ELEMENT KIT-OIL FILTER S						1			
	[04] 111 184 00 32		VALVE-OIL FLTR NONRETURN S						1			
	[05] 111 993 32 01		SPRING-OIL FLTR NONRETURN VLV S						1			
	[06] 007603 022100		SEAL RING S						1			A22×27-AL
	[07] 111 990 14 01		SCREW S						1			
	[08] 111 990 01 12		PLUG S						1			
	[09] 007603 027101		RING-SEALING S						1			

1541

OIL FILTER - G23D

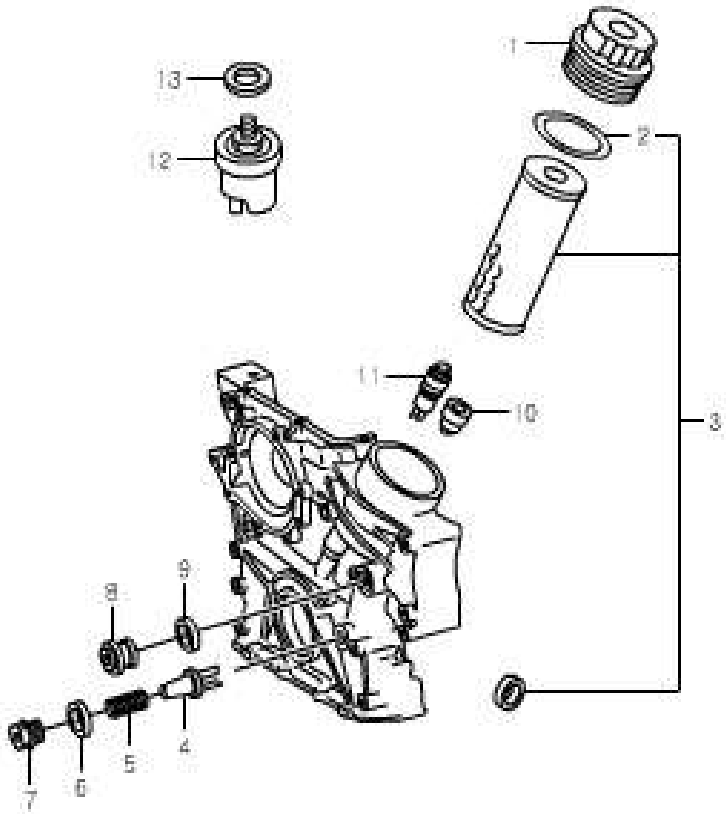

KEY NO.		PART NAME										
			ENGINE							APPLICATION		
ITC	PART NO.	T/M	G23D	G32D			OPTION	L/R	Q'TY	FROM	TO	REMARK
	[10] 000 180 04 32		VALVE ASSY-OIL FLTR BYPASS S						1			
	[11] 000 180 05 32		VALVE ASSY-OIL FILTER DRAIN S						1			
	[12] 661 542 31 17		SWITCH-OIL PRESSURE S						1			
	[13] 007603 012110		RING-SEAL S						1			A12X17

1542

OIL FILTER - G32D

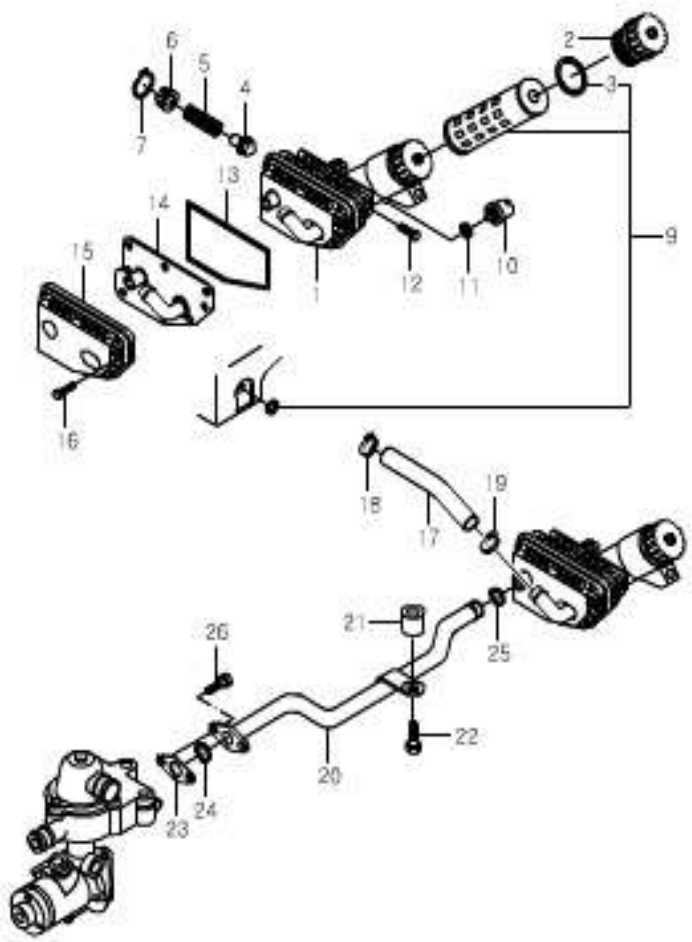

KEY NO.		PART NAME										
ITC	PART NO.	T/M	ENGINE G23D	ENGINE G32D	ENGINE	ENGINE	OPTION	L/R	Q'TY	APPLICATION FROM	APPLICATION TO	REMARK
	[01] 162 180 30 10		FILTER ASSY-OIL S						1			
	[02] 162 184 30 08		COVER-OIL FILTER S						1			
	[03] 017 997 31 48		RING-O S						1			
	[04] 601 184 01 32		VALVE-OIL FILTER BYPASS S						1			
	[05] 102 993 07 01		SPRING-OIL FILTER BYPASS S						1			
	[06] 102 184 00 31		RETAINER S						1			
	[07] 000472 024000		RING-SNAP S						1			
	[08] 601 184 07 80		GASKET-OIL FILTER HOUSING S						1			
	[09] 162 184 30 25		ELEMENT KIT-OIL FILTER S						1			
									1			

1542

OIL FILTER - G32D

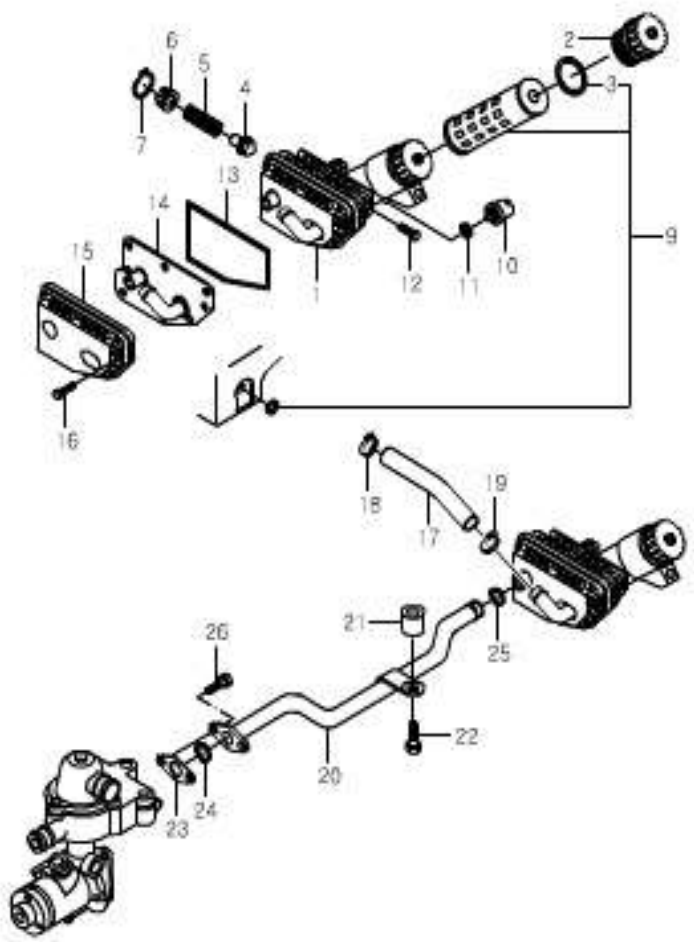

KEY NO.		PART NAME										
ITC	PART NO.	T/M	ENGINE G23D	ENGINE G32D	ENGINE	ENGINE	OPTION	L/R	Q'TY	APPLICATION FROM	APPLICATION TO	REMARK
	[10]		SWITCH-OIL PRESSURE									
	661 542 31 17		S						1			
	[11]		RING-SEAL									
	007603 014110		S						1			A14X18
	[12]		BOLT-COMB									
	914020 008004		S						1			M8X30 L8451.21
	914034 008013		S						1			M8X50
	914034 008005		S						1			M8X75
	914034 008015		S						1			M8X125 8.8 L8451.21
	[13]		GASKET-OIL FILTER									
	601 184 07 80		S						1			
	[14]		COOLER ASSY-OIL									
	104 180 04 09		S						1			
	[15]		REINFT-OIL COOLER									
	162 184 30 95		S						1			
	[16]		BOLT									
	001 990 72 12		S						8			M6X25
	[17]		HOSE									
	900271 015144		S						1			

1542

OIL FILTER - G32D

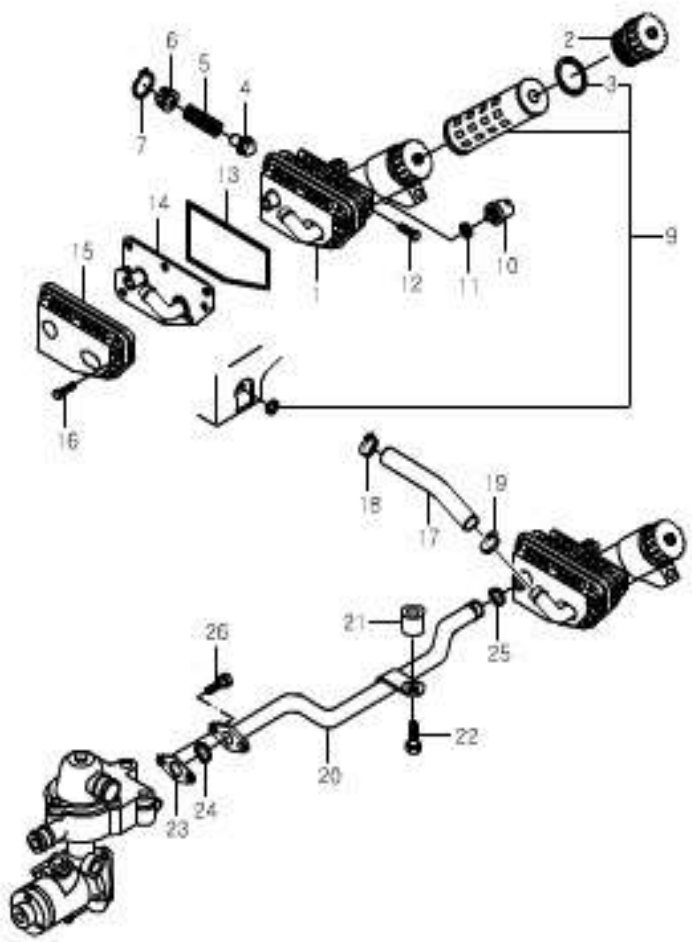

KEY NO.		PART NAME										
ITC	PART NO.	T/M	ENGINE G23D	ENGINE G32D	ENGINE	ENGINE	OPTION	L/R	Q'TY	APPLICATION FROM	APPLICATION TO	REMARK
	[18] 004 997 51 90		CLAMP S						1			
	[19] 916026 016001		CLAMP S						1			
	[20] 162 200 34 52		PIPE ASSY-OIL COOLANT S						1			
	[21] 102 991 04 40		TUBE-SPACER S						1			
	[22] 914005 006020		BOLT-COMB S						1			M6×16 8.8 L8451.21
	[23] 162 203 30 39		FLANGE S						1			
	[24] 017 997 82 48		O-RING S						1			
	[25] 021 997 49 48		RING-O S						1			
	[26] 000933 006175		BOLT S						2			M6×16 8.8 DBL8451.21

1623

VACUUM SYSTEM - G23D

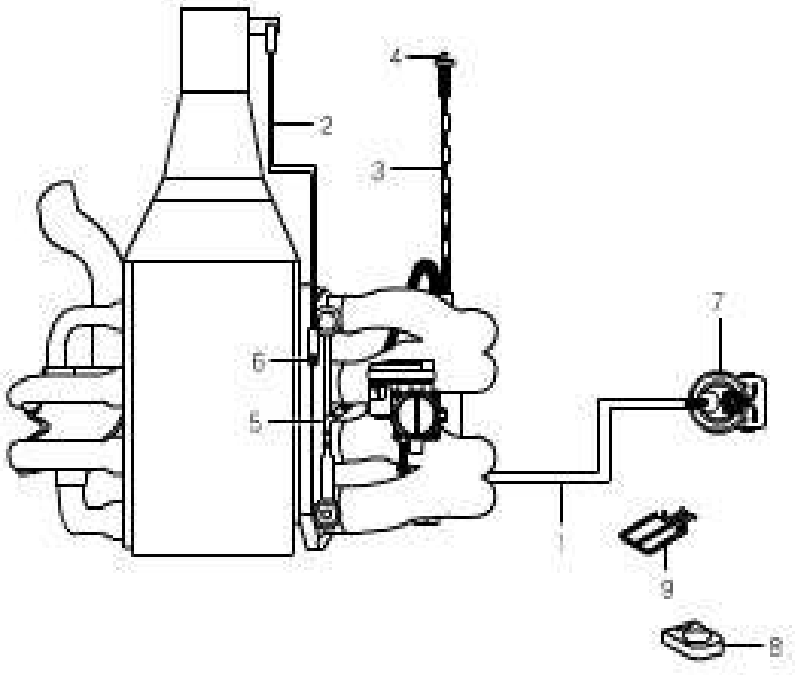

KEY NO.		PART NAME										
			ENGINE							APPLICATION		
ITC	PART NO.	T/M	G23D	G32D			OPTION	L/R	Q'TY	FROM	TO	REMARK
	[01] 161 070 49 38		TUBE ASSY-FUEL S						1			L=255
	[02] 161 070 36 38	A	TUBE ASSY-VACCUM S						1			
	[03] 161 070 35 38		TUBE ASSY-VACCUM S						1			
	[04] 116 276 09 29		CONNECTOR S						1			
	[05] 161 070 34 38		TUBE ASSY-VACCUM S						1			
	[06] 000 987 11 45		CAP-RUBBER S						3			
	[07] 161 141 35 60		VALVE ASSY-PURGE CONTROL S						1			
	[08] 120 141 12 40		INSULATOR-RUBBER S						1			
	[09] 161 141 32 40		BRACKET-PURGE CONTROL VALVE S						1			

1624

VACUUM SYSTEM - G32D

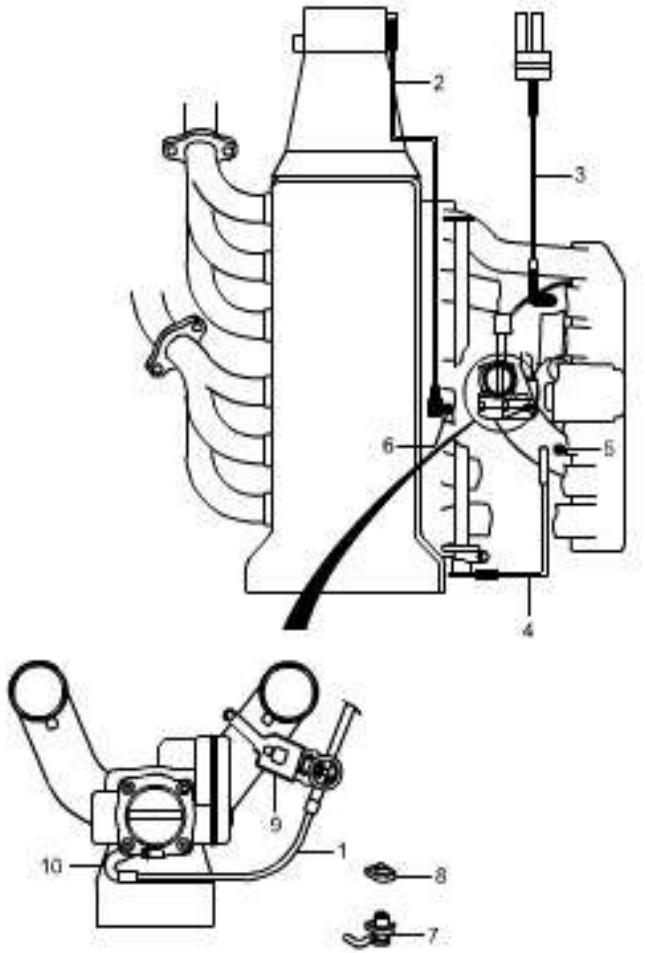

KEY NO.		PART NAME										
			ENGINE							APPLICATION		
ITC	PART NO.	T/M	G23D	G32D			OPTION	L/R	Q'TY	FROM	TO	REMARK
	[01] 162 070 49 38		TUBE ASSY-FUEL S						1			L=318
	[02] 162 070 33 38		TUBE ASSY-VACCUM S						1			
	[03] 162 070 34 38		TUBE ASSY-VACCUM S						1			
	[04] 162 070 55 38		TUBE ASSY-VACCUM S						1			270MM
	[05] 000 987 11 45		RUBBER CAP S						1			
	[06] 000 987 37 45		CAP-LOCKING S						1			
	[07] 161 141 35 60		VALVE ASSY-PURGE CONTROL S						1			
	[08] 120 141 12 40		INSULATOR-RUBBER S						1			
	[09] 162 141 32 40		BRACKET-PURGE CONTROL VALVE S						1			

1712

INTAKE MANIFOLD - G23D

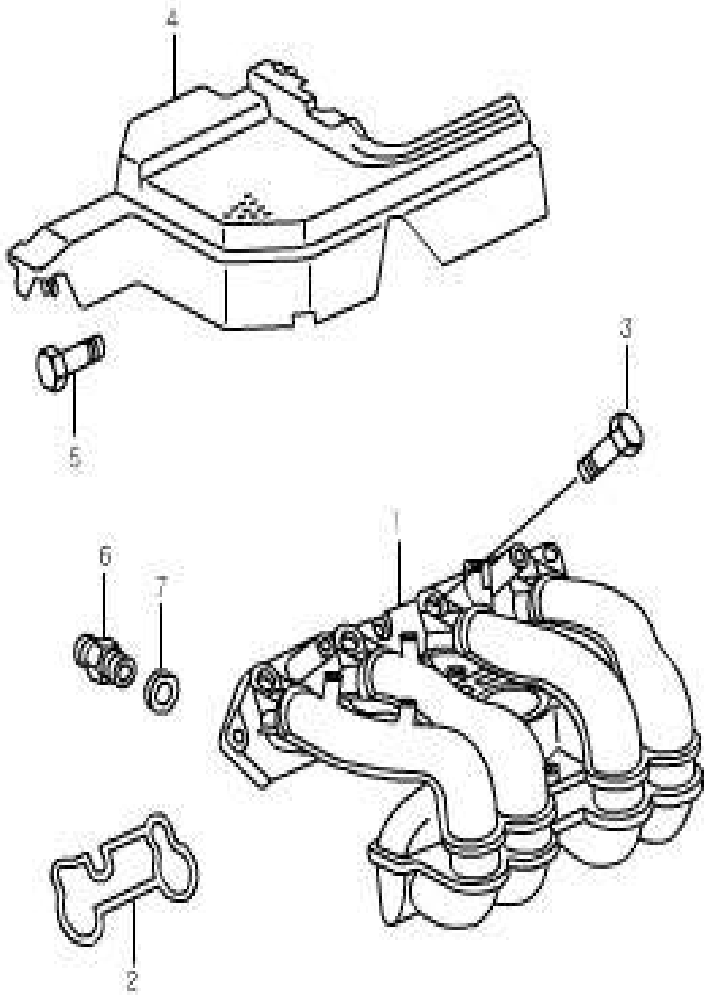

KEY NO.		PART NAME										
			ENGINE							APPLICATION		
ITC	PART NO.	T/M	G23D	G32D			OPTION	L/R	Q'TY	FROM	TO	REMARK
	[01] 161 140 50 01		MANIFOLD ASSY-INTAKE S						1			
	[02] 161 141 30 80		RING-SEAL S						2			
	[03] 111 990 17 01		BOLT S						6			
	[04] 111 072 00 30		COVER-PROTECTION LINKAGE S						1			
	[05] 111 018 00 71		SCREW S						3			
	[06] 915023 010001		PIECE-CONNECTION S						1			
	[07] 007603 014104		RING-SEAL S						1			A14X20
	[08] 161 153 36 28		SENSOR-KNOCK S						1			
	[09] 000933 008116		BOLT S						1			M8X28

1713

INTAKE MANIFOLD - G32D

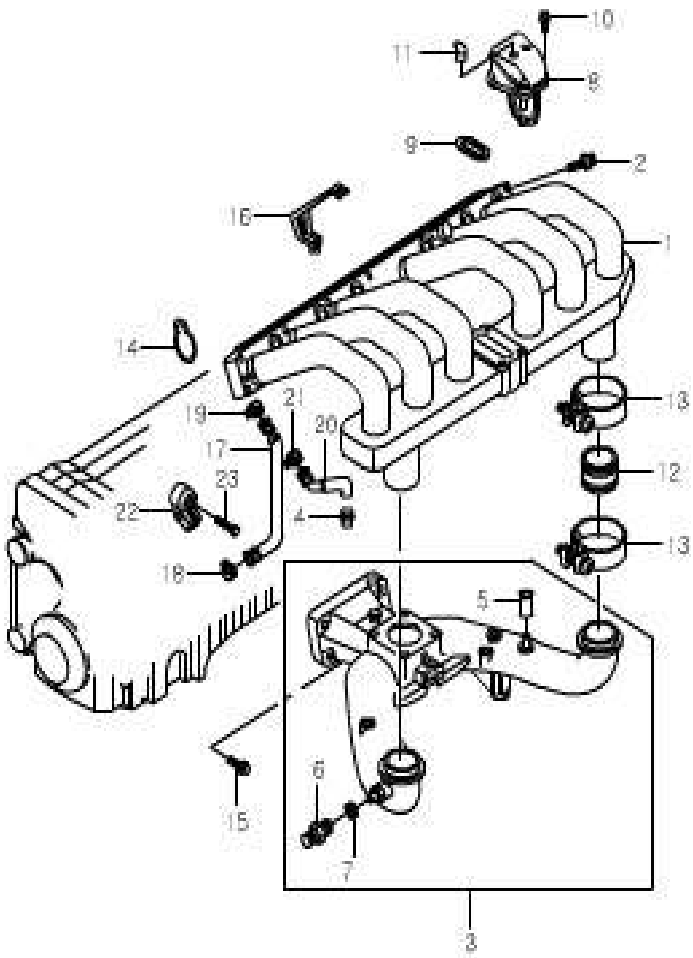

KEY NO.		PART NAME										
			ENGINE							APPLICATION		
ITC	PART NO.	T/M	G23D	G32D			OPTION	L/R	Q'TY	FROM	TO	REMARK
	[01] 104 140 44 01		MANIFOLD ASSY-INTAKE UPR S						1			
	[02] 914020 008013		BOLT S						9			M8X50
	[03] 104 140 41 01		MANIFOLD ASSY-INTAKE,LWR S						1			
	[04] 162 141 30 83		NIPPLE(HOSE-CONNECTION) S						1			
	[05] 117 990 02 78		NIPPLE S						3			
	[06] 403 997 11 72		CONNECTOR S						1			
	915013 008002		S						1			
	[07] 007603 014104		RING-SEAL S						1			A14X20
	[08] 000 140 04 31		FLAP-RESONANCE S						1			
	[09] 104 141 11 80		PACKING S						1			

1713

INTAKE MANIFOLD - G32D

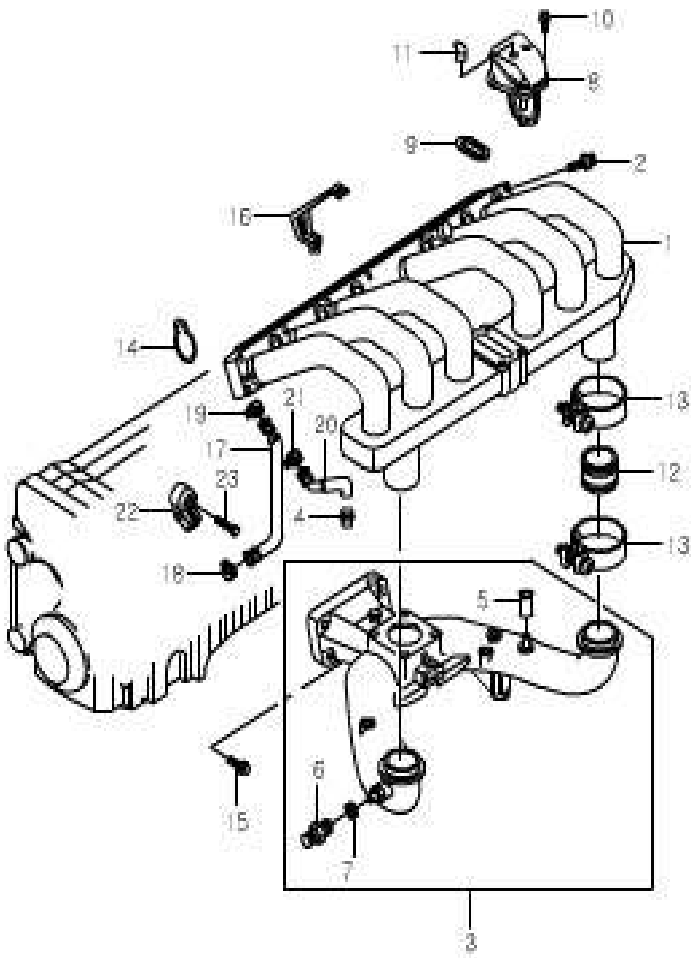

KEY NO.		PART NAME										
ITC	PART NO.	T/M	ENGINE G23D	ENGINE G32D	ENGINE	ENGINE	OPTION	L/R	Q'TY	APPLICATION FROM	APPLICATION TO	REMARK
	[10] 914020 006003		BOLT S						4			M6X25
	[11] 104 997 00 35		CAP-SOFT S						2			
	[12] 162 141 30 83		HOSE-CONNECTION S						2			
	[13] 104 995 00 05		CLAMP S						4			
	[14] 104 141 10 80		GASKET S						6			
	[15] 104 990 02 12		BOLT S						4			
	[16] 162 018 31 40		BRACKET S						1			
	[17] 104 094 35 82		FORMING HOSE S						1			
	[18] 116 997 03 90		CLAMP S						1			

1713

INTAKE MANIFOLD - G32D

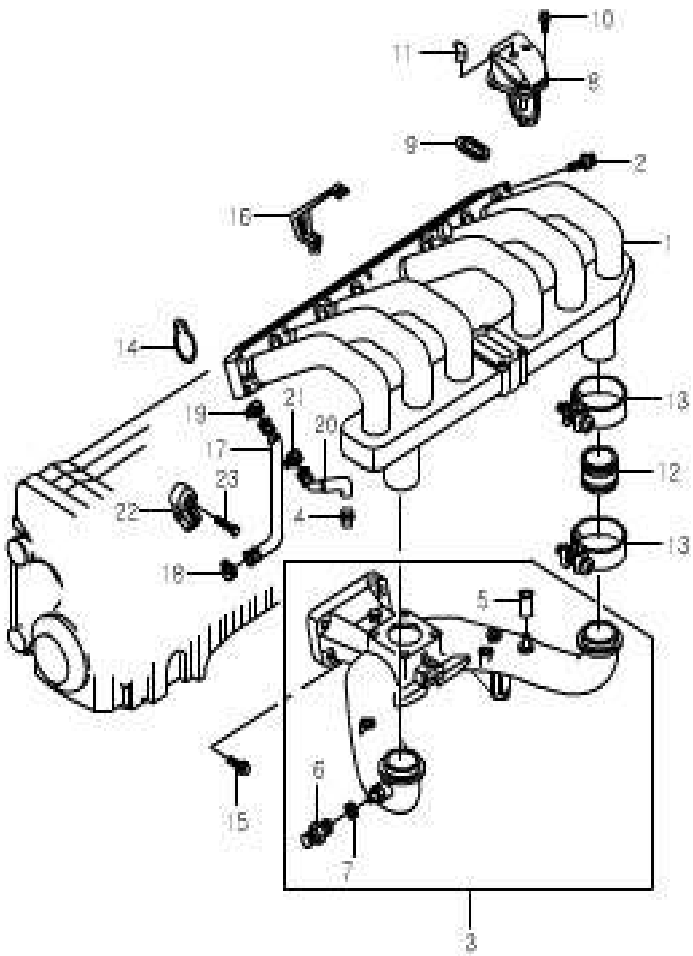

KEY NO.		PART NAME										
ITC	PART NO.	T/M	ENGINE G23D	ENGINE G32D	ENGINE	ENGINE	OPTION	L/R	Q'TY	APPLICATION FROM	APPLICATION TO	REMARK
	[19] 104 997 01 90		CLAMP S						1			
	[20] 104 094 36 82		HOSE-BLOW BY S						1			
	[21] 104 997 04 90		CLAMP S						1			Φ=15
	[22] 161 153 36 28		SENSOR-KNOCK S						1			
	[23] 000933 008116		BOLT S						2			M8X28

1722

EXHAUST MANIFOLD - G23D

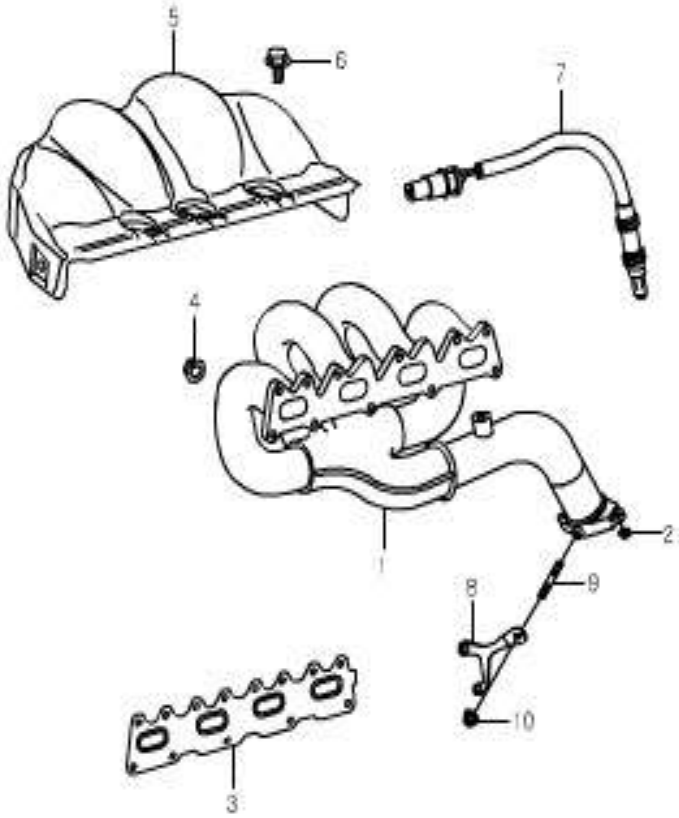

KEY NO.		PART NAME										
			ENGINE							APPLICATION		
ITC	PART NO.	T/M	G23D	G32D			OPTION	L/R	Q'TY	FROM	TO	REMARK
	[01] 161 140 32 09		MANIFOLD ASSY-EXHAUST S						1			
	[02] 000 990 25 52		NUT S						2			
	[03] 161 142 30 80		GASKET-EXHAUST MANIFOLD S						1			
	[04] 120 142 00 72		NUT-EXHAUST MANIFOLD S						11			
	[05] 111 140 21 34		PROTECTOR ASSY-HEAT S						1			
	[06] 111 990 22 04		BOLT-FLANGE S						5			
	[07] 161 540 35 17		SENSOR ASSY-O_2 S						1			
	[08] 111 142 02 40		BRACKET-EXHAUST MANIFOLD ATT/M S						1			
	[09] 001 990 46 05		BOLT-STUD S						1			M10

1722

EXHAUST MANIFOLD - G23D

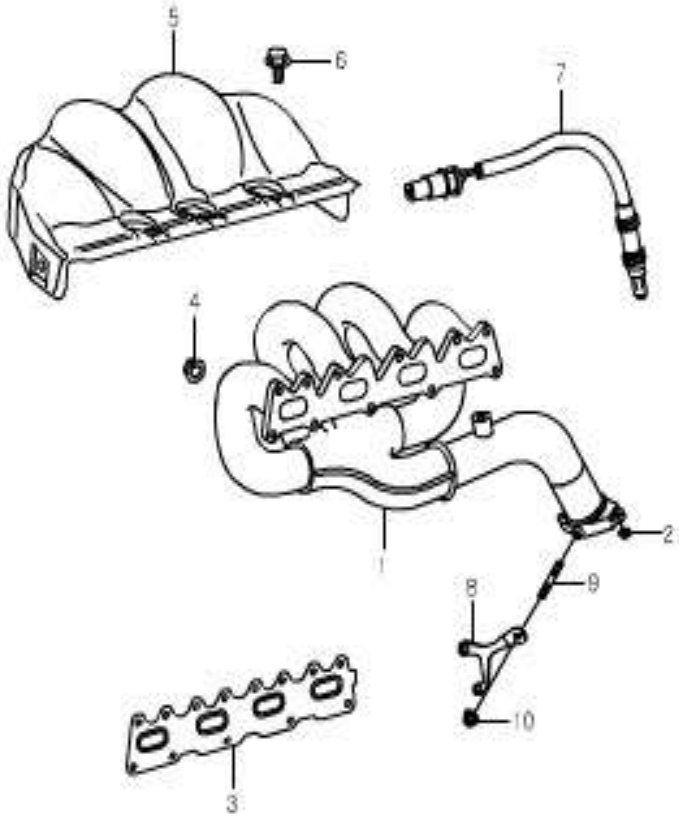

KEY NO.		PART NAME											
			ENGINE							APPLICATION		
ITC	PART NO.	T/M	G23D	G32D			OPTION	L/R	Q'TY	FROM	TO	REMARK
	[10] 001 990 28 50		NUTS						1			M10

1723

EXHAUST MANIFOLD - G32D

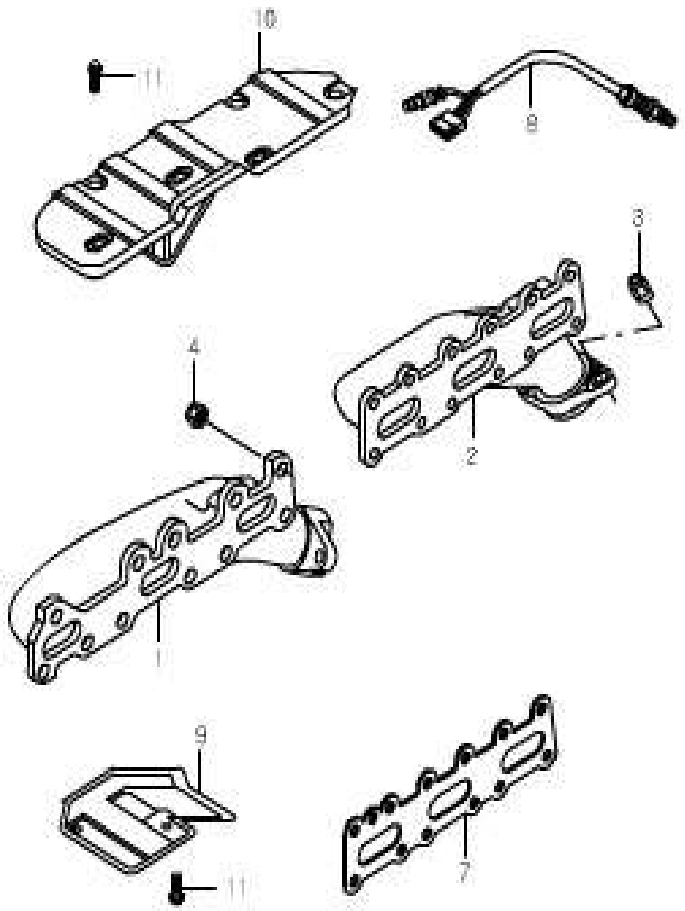

KEY NO.		PART NAME										
ITC	PART NO.	T/M	ENGINE G23D	ENGINE G32D	ENGINE	ENGINE	OPTION	L/R	Q'TY	APPLICATION FROM	APPLICATION TO	REMARK
	[01] 162 142 46 01		MANIFOLD ASSY-EXHAUST S						1			CYL.1-3
	[02] 162 142 45 01		MANIFOLD ASSY-EXHAUST S						1			CYL.4-6
	[03] 000 990 25 52		NUT S						4			
	[04] 104 142 00 72		NUT S						23			
	[07] 162 142 32 80		GASKET-EXHAUST MANIFOLD S						2			
	[08] 162 540 37 17		SENSOR ASSY-O2 S						1			
	162 540 38 17		S						1			
	[09] 162 142 30 20		PROTECTOR ASSY-HEAT S						1			
	[10] 162 142 31 20		PROTECTOR ASSY-TOP S						1			
	[11] 111 990 22 04		BOLT S						9			

1842

INJECTION CONTROL SYSTEM - G23D

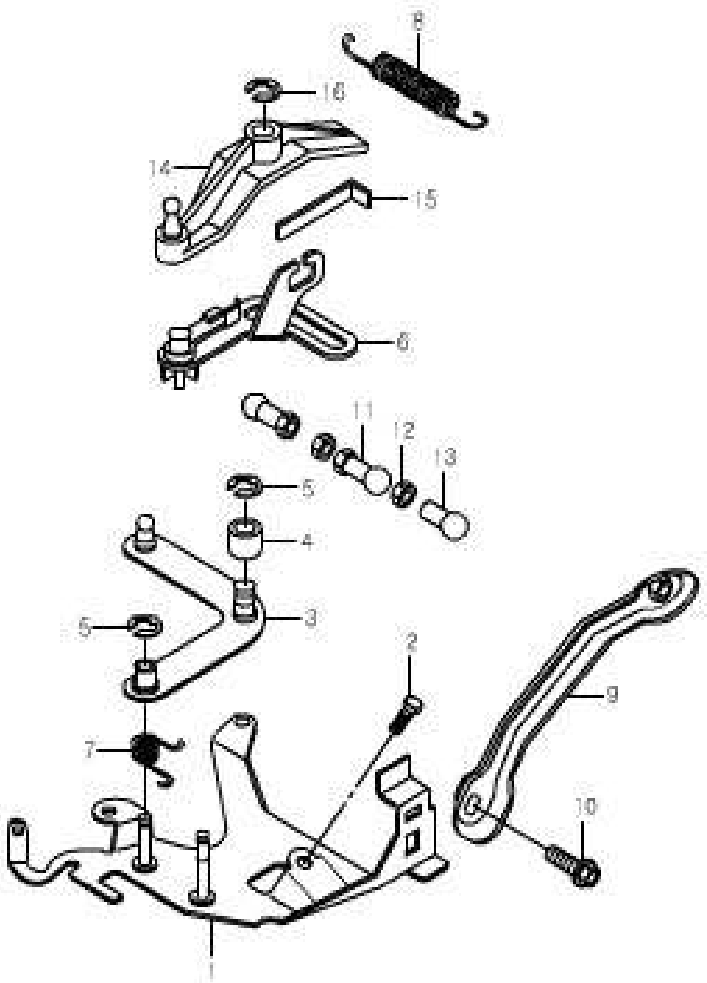

KEY NO.		PART NAME										
			ENGINE							APPLICATION		
ITC	PART NO.	T/M	G23D	G32D			OPTION	L/R	Q'TY	FROM	TO	REMARK
	[01] 111 070 17 24		BRACKET ASSY-BEARING S						1			
	[02] 000912 006097		BOLT S						2			
	[03] 111 070 34 21		LEVER ASSY-CONTROL S						1			
	[04] 111 072 00 93		ROLLER S						1			
	[05] 006799 005009		RING-SNAP S						1			
	[06] 111 070 45 21		LEVER ASSY-SLOTTED GATE S						1			
	[07] 111 993 05 20		SPRING-TORSION S						1			
	[08] 111 993 17 10		SPRING-RETURN S						1			
	[09] 161 070 31 76		SUPPORT ASSY S						1			

1842

INJECTION CONTROL SYSTEM - G23D

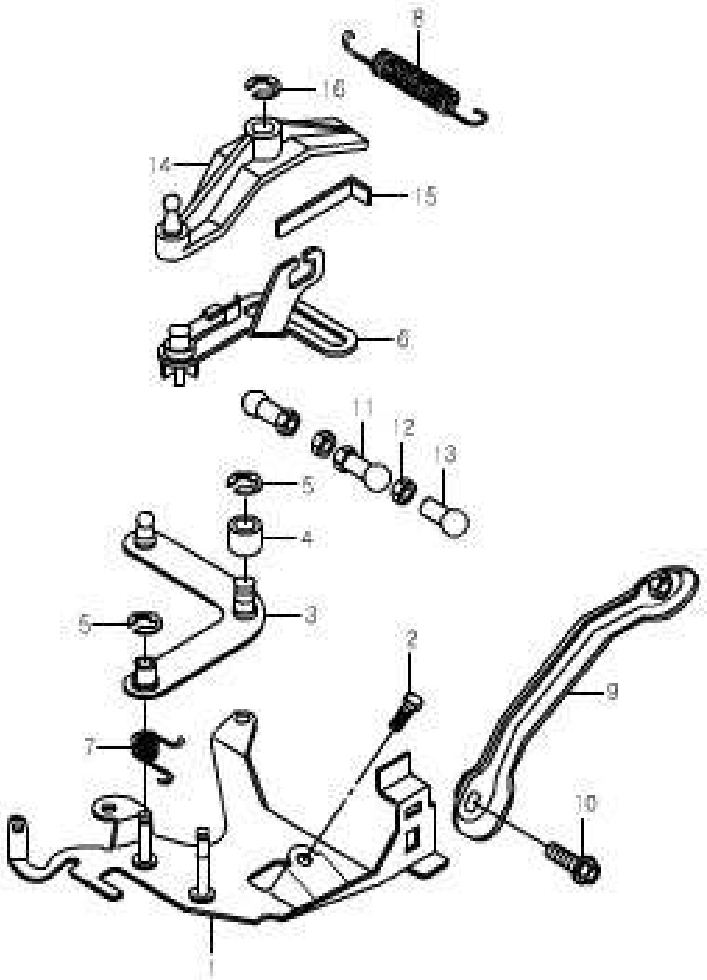

KEY NO.		PART NAME										
			ENGINE							APPLICATION		
ITC	PART NO.	T/M	G23D	G32D			OPTION	L/R	Q'TY	FROM	TO	REMARK
	[10]		BOLT									
	000933 008214		S						2			
	[11]		ROD ASSY-CONNECTING									
	111 070 06 75		S						1			
	[12]		NUT									
	000934 005004		S					L	1			
	000934 005010		S					R	1			
	[13]		SOCKET ASSY-BALL									
	000 991 90 22		S					L	1			

1843

INJECTION CONTROL SYSTEM - G32D

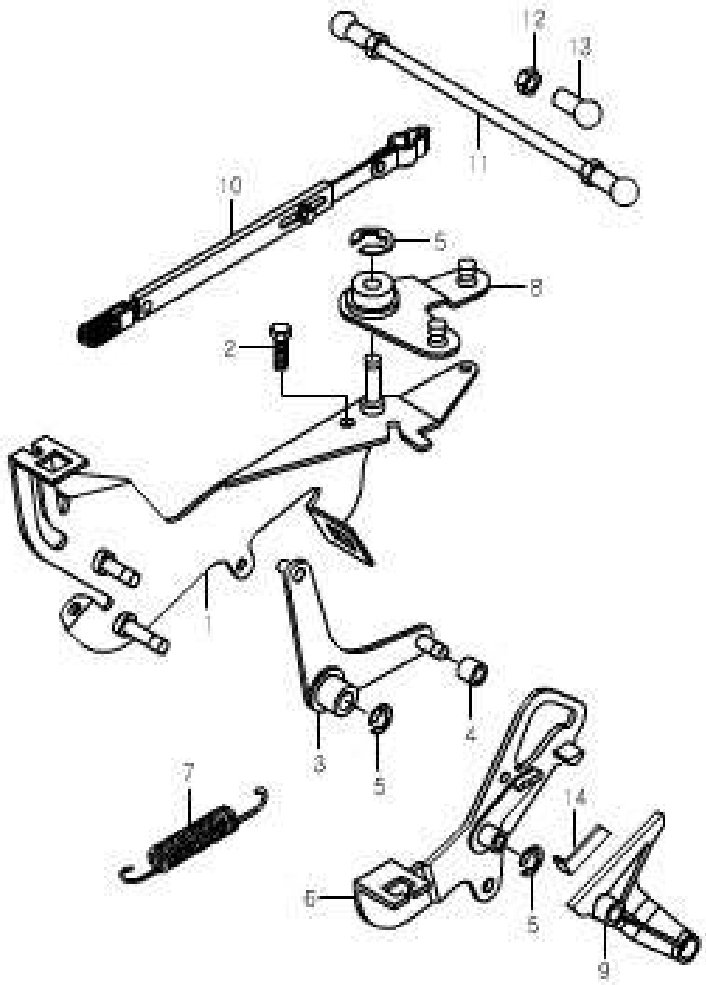

KEY NO.		PART NAME										
ITC	PART NO.	T/M	ENGINE G23D	ENGINE G32D	ENGINE	ENGINE	OPTION	L/R	Q'TY	APPLICATION FROM	APPLICATION TO	REMARK
	[01] 104 070 18 24		BRACKET ASSY-BEARING S						1			
	[02] 000933 006175		BOLT S						3			M6X16
	[03] 104 070 22 21		LEVER ASSY-CONTROL S						1			
	[04] 111 072 00 93		ROLLER S						1			
	[05] 006799 005009		RING-SNAP S						3			
	[06] 104 070 27 21		LEVER ASSY-SLOTTED GATE S						1			
	[07] 110 993 17 10		SPRING-RETURN S						1			
	[08] 104 070 11 22		LEVER ASSY-REVERSING S						1			
	[09] 104 070 23 21		LEVER ASSY-BEARING S						1			

1843

INJECTION CONTROL SYSTEM - G32D

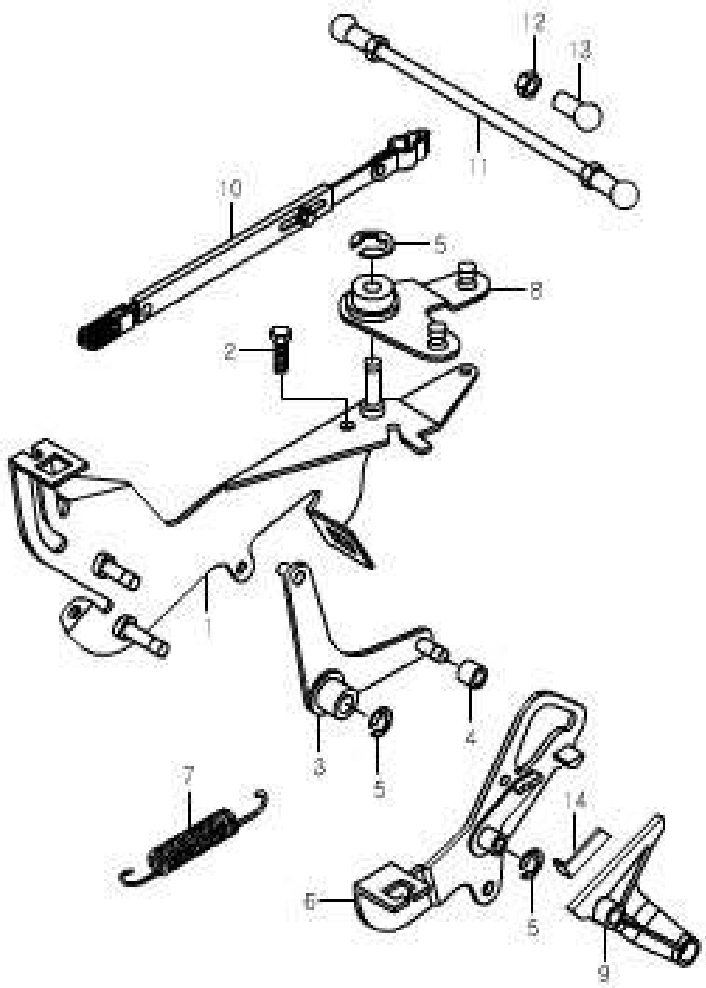

KEY NO.		PART NAME										
ITC	PART NO.	T/M	ENGINE G23D	ENGINE G32D	ENGINE	ENGINE	OPTION	L/R	Q'TY	APPLICATION FROM	APPLICATION TO	REMARK
	[10] 001 070 65 75		ROD-CONNECTING S						1			
	[11] 104 070 01 75		ROD ASSY-CONNECTING S						1			
	[12] 000934 005004		NUT S						2			
	304032 005002		S						2			
	[13] 000 991 89 22		SOCKET ASSY-BALL S						2			
	[14] 104 072 01 43		SPRING S						1			

1990

ENGINE MOUNTING

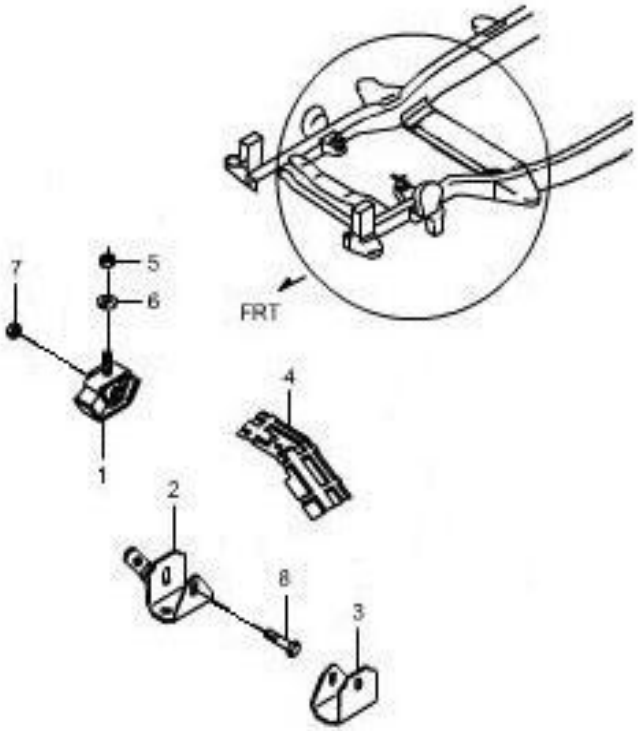

KEY NO. ITC	PART NO.	T/M	ENGINE G23D	ENGINE G32D	ENGINE	ENGINE	OPTION	L/R	Q'TY	APPLICATION FROM	APPLICATION TO	REMARK
	[01]		INSULATOR-ENG MTG FRT									
	20911 05112		S						2			
	20911 05131			S					2			4WD
	[02]		STOPPER A-ENG MRG									
	20920 05002		S	S				L	1			
	[03]		STOPPER-ENG MTG FRT									
	20921 05000		S	S					1			
	[04]		HEAT SHIELD-INSULATOR									
	20951 05100		S	S					1			
	[05]		NUT-HEX									
	92036 1200D		S	S					2			M12X1.25
	[06]		WASHER-PLAIN									
	93414 1200D		S	S					2			M12
	[07]		NUT-HEX FLG									
	92896 1000D		S	S					6			M10X1.25
	[08]		BOLT-HEX SEMS									
	95669 1095D		S	S					2			M10X1.25X95

2 FUEL/ ENGINE CONTROL SYSTEM

2010 ACCELERATOR CONTROL

2111 RADIATOR

2120 COOLING FAN

2130 RADIATOR HOSE & PIPE

2210 FUEL TANK

2220 FUEL LINE

2312 AIR CLEANER

2421 EXHAUST SYSTEM-G23D

2422 EXHAUST SYSTEM-G32D

2610 BATTERY & CABLE

2010

ACCELERATOR CONTROL

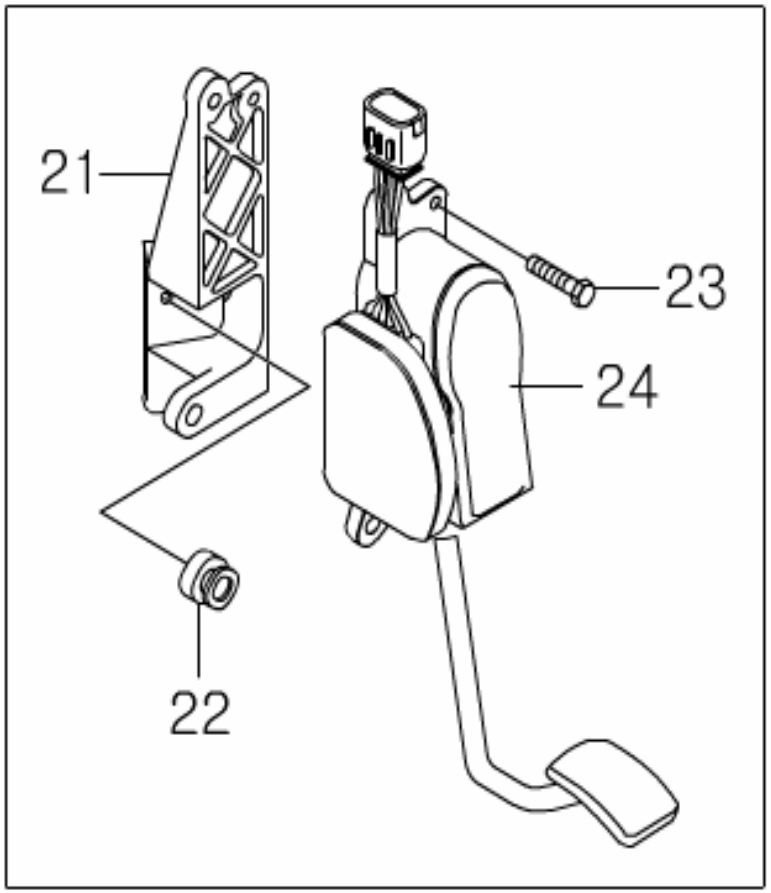

KEY NO.		PART NAME										
			ENGINE							APPLICATION		
ITC	PART NO.	T/M	G23D	G32D			OPTION	L/R	Q'TY	FROM	TO	REMARK
	[21] 20550 05002		BRKT A-PDL MODULE MTG S	S			&PEP.		1			
	[22] 20550 11000		STOPPER A-A/PEDAL S				&PEP&PM0.		1			
	[23] 98274 0625D		SCREW-HEX SEMS S	S			&PEP.		2			M6 X 1.0 X 26
	[24] R160N-0100		MODULE A-ACCEL PEDAL S	S			&PEP.		1			

2111

RADIATOR

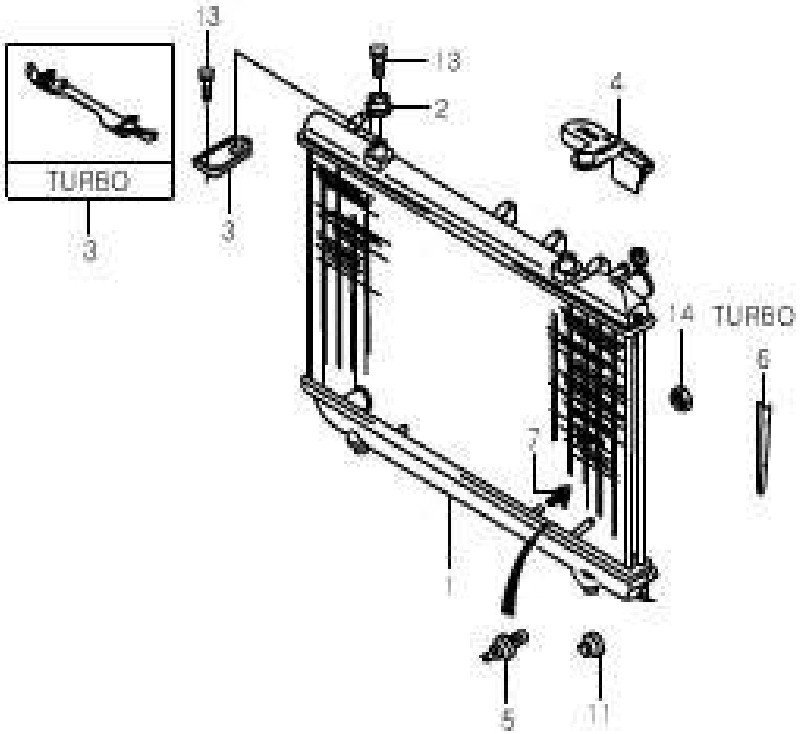

KEY NO.		PART NAME											
			ENGINE							APPLICATION		
ITC	PART NO.	T/M	G23D	G32D			OPTION	L/R	Q'TY	FROM	TO	REMARK
	[01]		RADIATOR A-COOLING									
	21310 05191	M	S				&PM0.		1			
	21310 05181	A	S				&PM1.		1			
	21310 05134	A		S			&PM1.		1			
	[02]		INSULATOR-RADIATOR MTG									
	21330 05000		S	S					4			
	[03]		STOPPER-RADIATOR MTG									
	21361 05000		S	S				L	1			
	[04]		STOPPER-RADIATOR MTG									
	21361 05010		S	S				R	1			
	[13]		SCREW-HEX SEMS									
	98274 0620D		S	S					4			M6×1.0×20

2120

COOLING FAN

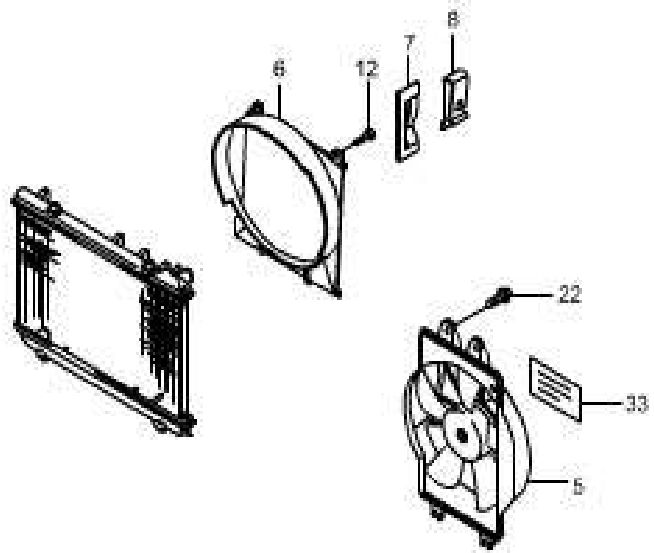

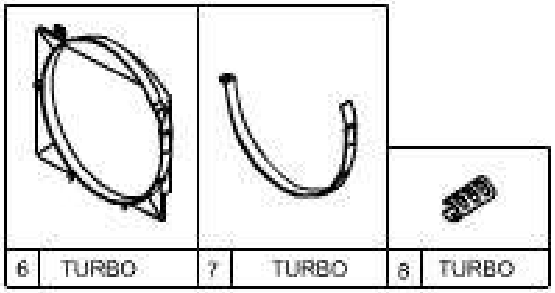

KEY NO.		PART NAME										
			ENGINE							APPLICATION		
ITC	PART NO.	T/M	G23D	G32D			OPTION	L/R	Q'TY	FROM	TO	REMARK
	[05] 68420 06351		FAN & SHROUD A-MAIN S	S					1			
	[05] 68420 05431		FAN & SHROUD A-ADD S	S					1			
	[06] 21651 05051		SHROUD-C/FAN S						1			
	[06] 21650 05061		SHROUD A-C/FAN	S					1			
	[07] 21652 05060		COVER-SHROUD	S					1			
	[08] 21655 05060		CLIP-SHROUD COVER MTG	S					2			M6 X 1.0 X 20
	[12] 98274 0620D		SCREW-HEX SEMS S						2			M6 X 1.0 X 20
	98274 0620D			S					4			M6 X 1.0 X 20
	[22] 98294 0630D		SCREW-HEX SEMS S	S					8			M6 X 1.0 X 30

2120

COOLING FAN

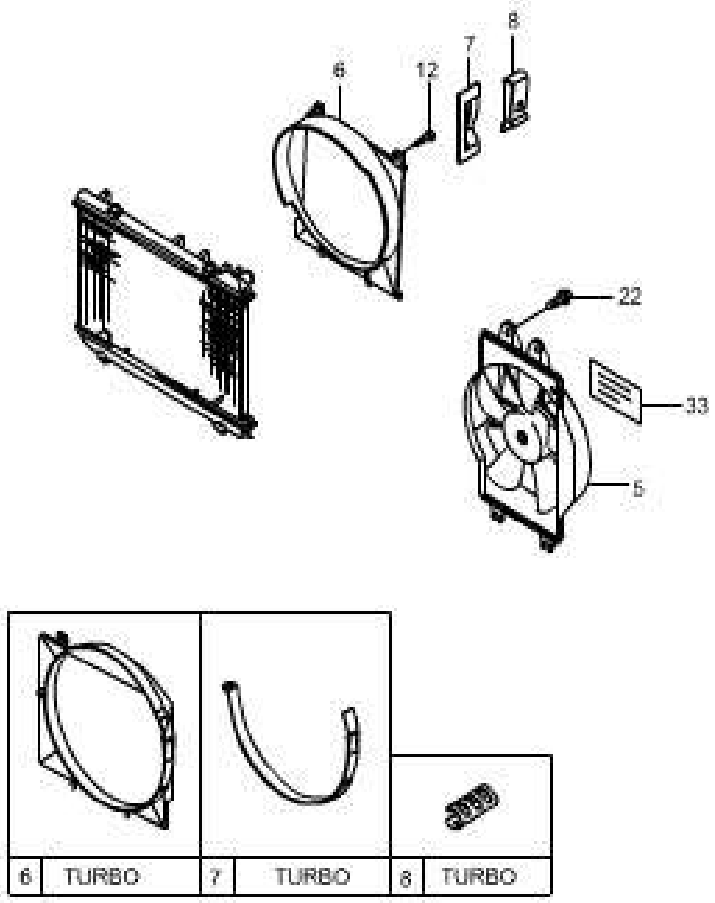

KEY NO.		PART NAME										
			ENGINE							APPLICATION		
ITC	PART NO.	T/M	G23D	G32D			OPTION	L/R	Q'TY	FROM	TO	REMARK
	[33] 68891 05003		LABEL-A/CON S	S					1			

2130

RADIATOR HOSE & PIPE

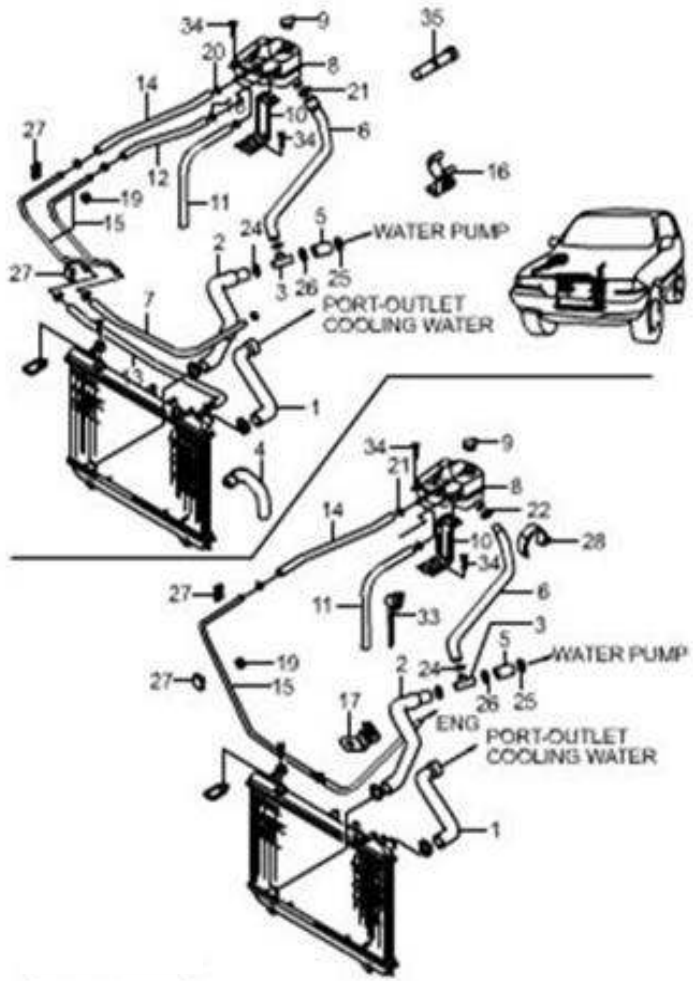

KEY NO.		PART NAME										
			ENGINE							APPLICATION		
ITC	PART NO.	T/M	G23D	G32D			OPTION	L/R	Q'TY	FROM	TO	REMARK
	[01]		HOSE-RADIATOR INLET									
	21411 05030		S						1			
	21411 05040			S								
	[02]		HOSE-RADIATOR TO CONN									
	21421 05030		S						1			
	[03]		CONNECTOR-4WAY COOLANT									
	21424 05000		S						1			
	[04]		HOSE-RADIATOR OUTLET									
	21425 05040			S					1			
	[05]		HOSE-CONNECTOR TO ENG									
	21422 05030		S						1			
	[06]		HOSE-MAKE UP									
	21423 05030		S						1			
	21423 05040			S					1			
	[07]		HOSE-DEAERATION ENG									
	21431 05031		S						1			
	21431 05041			S					1			
	[08]		TANK-COMPL RSVR									
	21605 05051		S	S					1			

2130

RADIATOR HOSE & PIPE

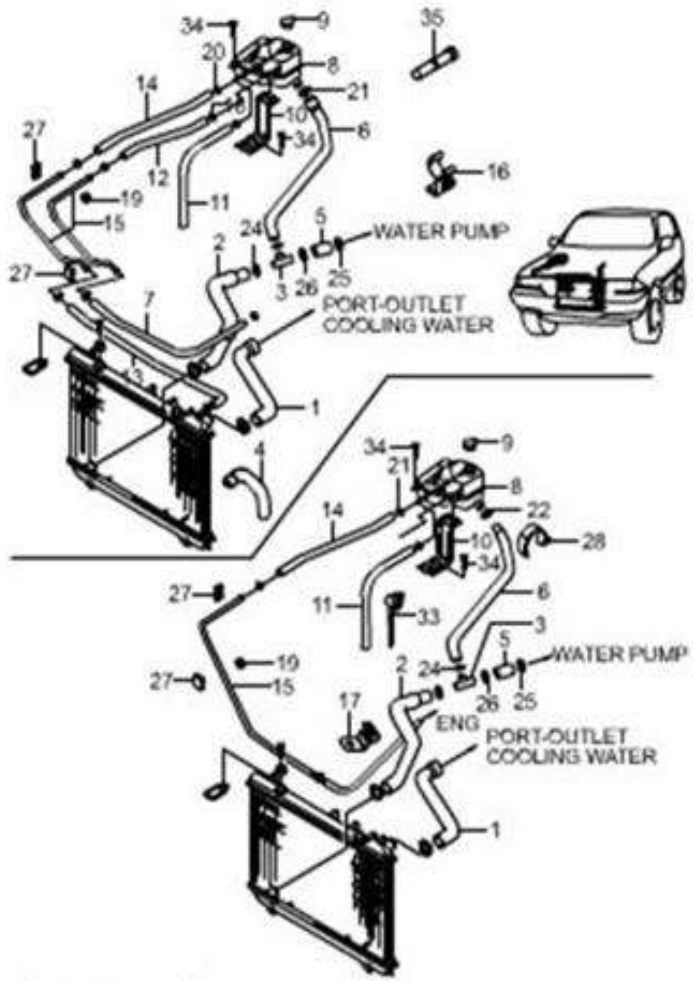

KEY NO.		PART NAME										
			ENGINE							APPLICATION		
ITC	PART NO.	T/M	G23D	G32D			OPTION	L/R	Q'TY	FROM	TO	REMARK
	[09]		CAP-RSVR TANK									
	21615 08050		S	S					1			
	[10]		BRKT A-R/TANK MTG #4									
	21641 05002		S	S					1			
	[12]		HOSE-DEAERATION									
	21432 05001		S	S					1			
	[15]		TUBE-DEAERATION RADIATOR									
	21436 05011		S						1			
	21436 05003			S					1			
	[16]		BRKT A-MAKE UP HOSE									
	21450 05040			S					1			
	[18]		CLIP-TUBE MTG									
	21437 05030		S						1			
	[19]		CLIP-DEAERATION TUBE MTG									
	21437 05321		S	S					3			
	[20]		CLAMP-SPRT									
	94657 14007		S	S					4			M14
	[21]		CLAMP-WDT-LE									
	99131 04000		S	S					1			M41

2130

RADIATOR HOSE & PIPE

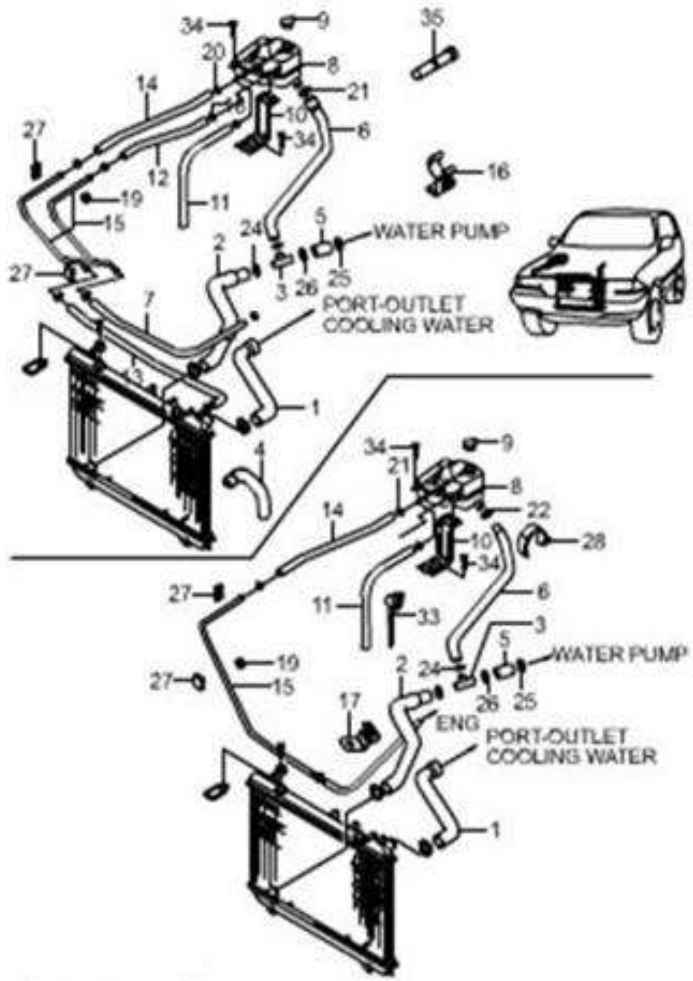

KEY NO.		PART NAME										
			ENGINE							APPLICATION		
ITC	PART NO.	T/M	G23D	G32D			OPTION	L/R	Q'TY	FROM	TO	REMARK
	[24] 21441 11450		CLAMP-WORM DRIVE TYPE SPR S	S					2			
	[25] 21441 11500		CLAMP-WORM DRIVE TYPE SPR S						1			
	[26] 21441 11450		CLAMP-WORM DRIVE TYPE SPR S						1			
	[34] 98274 0620D		SCREW-HEX SEMS S	S					5			M6 X 1.0 X 20
	[15] 21436 05003		TUBE-DEAERATION RADIATOR	S					1			
	[16] 21450 05040		BRKT A-MAKE UP HOSE	S					1			
	[18] 21437 05030		CLIP-TUBE MTG S						1			
	[19] 21437 05321		CLIP-DEAERATION TUBE MTG S	S					3			
	[20] 94657 14007		CLAMP-SPRT S	S					4			M14

2130

RADIATOR HOSE & PIPE

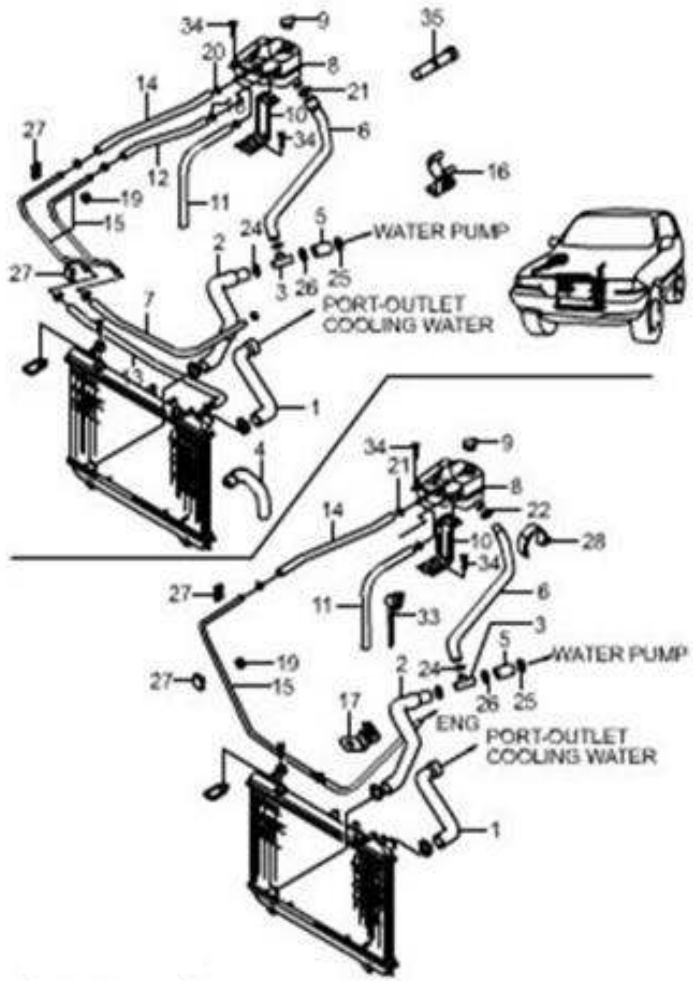

KEY NO.		PART NAME										
			ENGINE							APPLICATION		
ITC	PART NO.	T/M	G23D	G32D			OPTION	L/R	Q'TY	FROM	TO	REMARK
	[21] 99131 04000		CLAMP-WDT-LE S	S					1			M40
	[24] 21441 11450		CLAMP-WORM DRIVE TYPE SPR S	S					2			
	[25] 21441 11500		CLAMP-WORM DRIVE TYPE SPR S						1			
	[26] 21441 11450		CLAMP-WORM DRIVE TYPE SPR S						1			
	[34] 98274 0620D		SCREW-HEX SEMS S	S					5			M6 X 1.0 X 20

2210

FUEL TANK

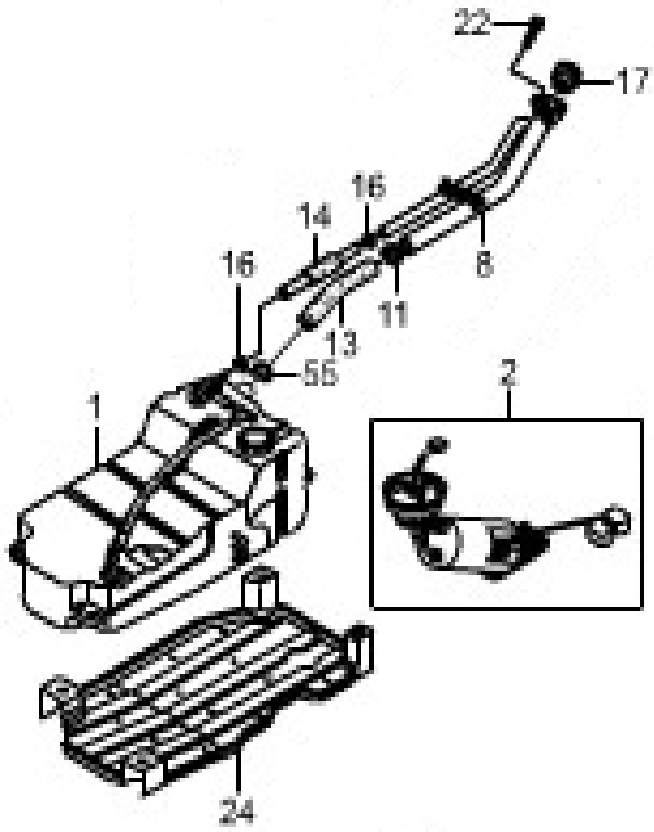

KEY NO.		PART NAME											
			ENGINE							APPLICATION		
ITC	PART NO.	T/M	G23D	G32D			OPTION	L/R	Q'TY	FROM	TO	REMARK
	[01] 22110 05604		TANK A-FUEL S	S					1			
	[02] 22312 05200		PUMP A-FUEL S	S					1			
	[08] 22610 05033		FILLER A-FUEL S	S					1			
	[11] 99131 05500		CLAMP S	S					1			
	[13] 22610 06010		HOSE-FUEL FILLER S	S					1			
	[14] 22670 05031		HOSE A-AIR VENT S	S					1			
	[16] 94600 22001		CLAMP-WR S	S					2			
	[17] 22690 08000		CAP A-F/FILLER S	S					1			
	[24] 22160 05051		PROTECTOR-F/TANK S	S					1			
	[55] 99131 05500		CLAMP-WDT-LE S	S					1			M55

2220

FUEL LINE

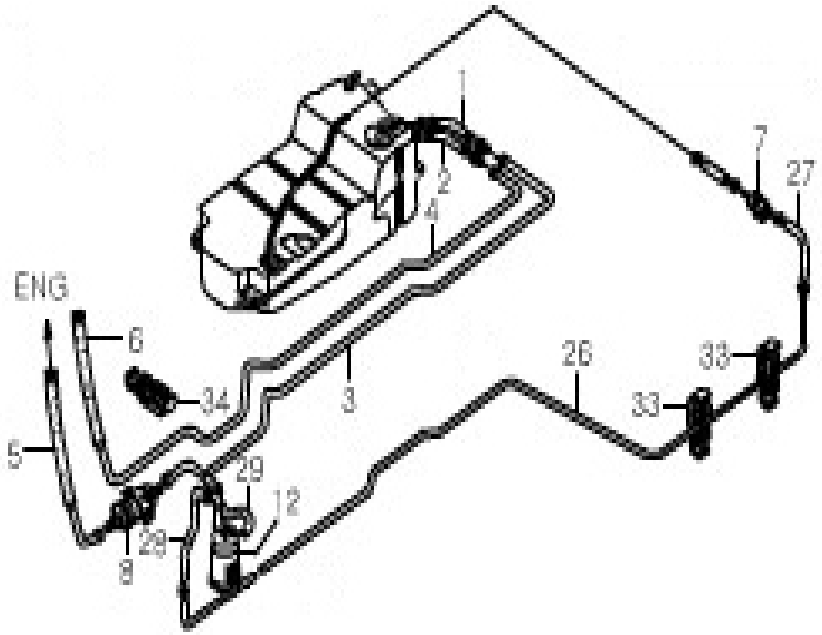

KEY NO.		PART NAME										
			ENGINE							APPLICATION		
I T C	PART NO.	T / M	G 2 3 D	G 3 2 D			OPTION	L / R	Q - T Y	FROM	TO	REMARK
	[01] 22759 05041		S	S			HOSE A-F/TANK TO TUBE		1			
	[02] 22761 05040		S	S			HOSE-RETURN TUBE		1			
	[03] 22710 05040		S	S			TUBE-FUEL SUPPLY		1			
	[04] 22718 05040		S	S			TUBE-FUEL RETURN		1			
	[05] 22738 05061		S	S			HOSE-F/FILTER TO ENG		1			
	[06] 22737 05061		S	S			HOSE-R/TUBE TO ENG		1			
	[07] 22183 05050		S	S			2WAY CHECK VALVE		1			
	[08] 22410 05040		S	S			FILTER A-FUEL		1			
	[12] 22510 05060		S	S			CANISTER A		1			

2220

FUEL LINE

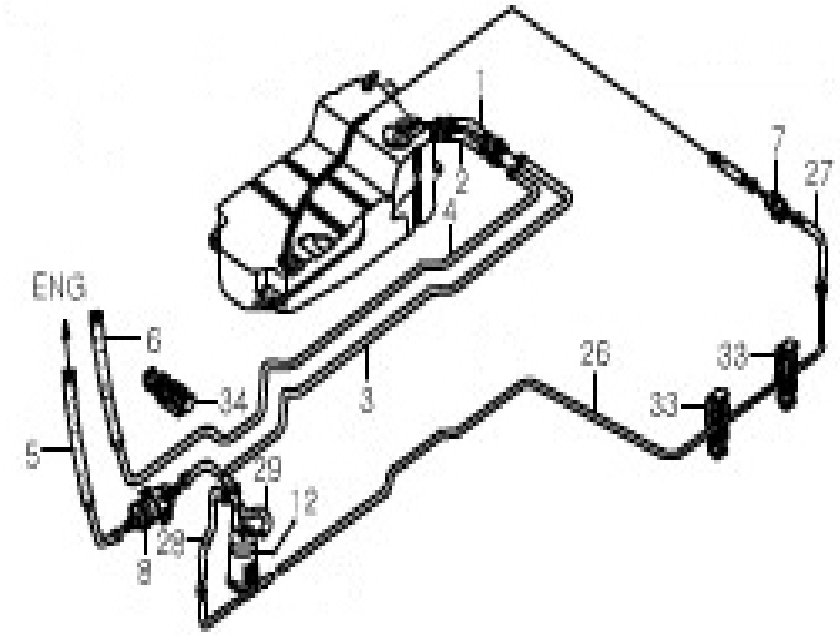

KEY NO.		PART NAME										
			ENGINE							APPLICATION		
ITC	PART NO.	T/M	G23D	G32D			OPTION	L/R	Q'TY	FROM	TO	REMARK
	[26] 22727 05041		TUBE-FUEL VAPOR S	S					1			
	[27] 22732 05050		HOSE-VAPOR F/TANK TO TUBE S	S					1			
	[28] 22733 05052		HOSE-CANI TO V/TUBE S	S					1			
	[29] 22736 05052		HOSE-P.C.V TO CANISTER S	S					1			
	[33] 22741 05040		CLIP-FUEL TUBE MTG S	S					5			
	[34] 22742 05040		CLIP-FUEL TUBE MTG S	S					2			

2312

AIR CLEANER

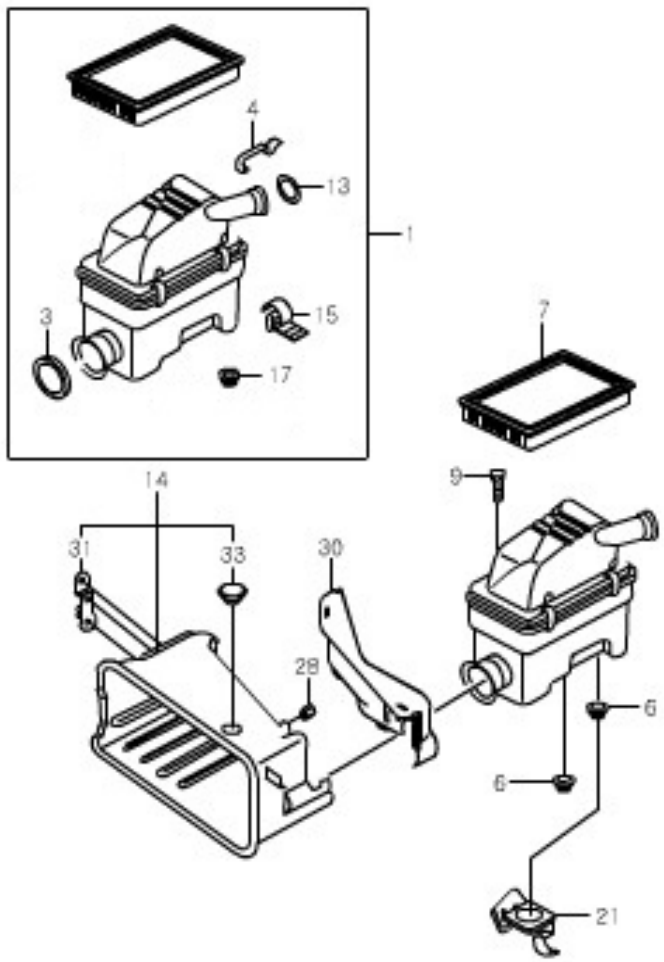

KEY NO.		PART NAME										
			ENGINE						APPLICATION			
ITC	PART NO.	T/M	G23D	G32D			OPTION	L/R	Q'TY	FROM	TO	REMARK
	[01] R160M-0210		CLEANER A-AIR S						1			
	[01] R160M-0200		CLEANER A-AIR S						1			
	[03] 23126 05031		SEALRING S	S					1			
	[04] 23115 05040		CLIP-A0F0M S	S					2			
	[06] 23160 05030		INSULATOR-A/CLNR MTG #1 S	S					2			
	[07] R160M-0001		R160M-0001 S	S					1			
	[09] 91604 0830D		BOLT-HEX FLG S	S					1			M8 X 1.25
	[13] 23125 05040		O-RING S						1			
	[13] 23125 05030		O-RING S						1			

2312

AIR CLEANER

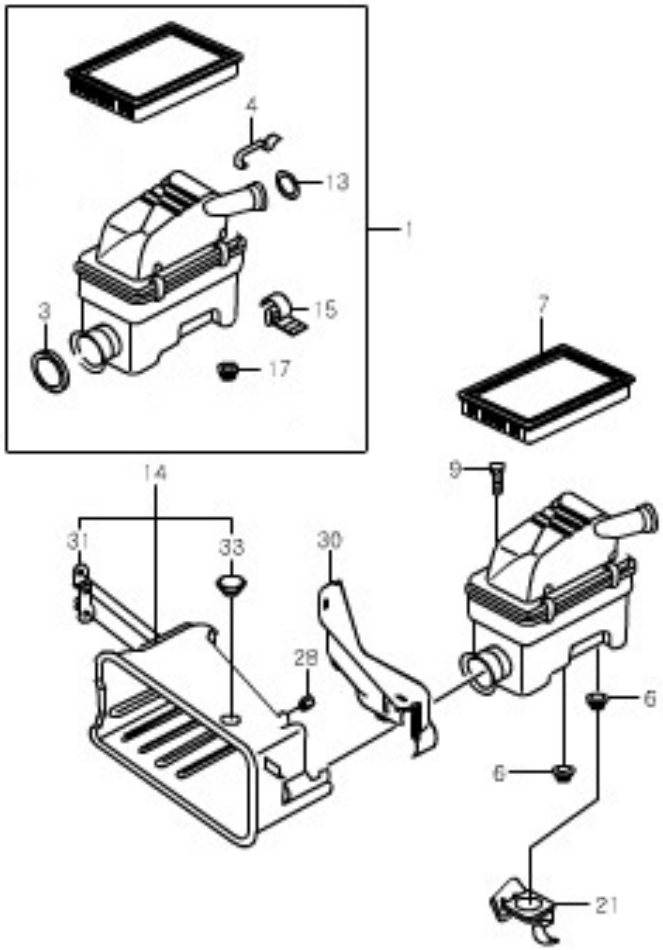

KEY NO.		PART NAME										
			ENGINE							APPLICATION		
ITC	PART NO.	T/M	G23D	G32D			OPTION	L/R	Q'TY	FROM	TO	REMARK
	[14] 23550 05034		SHIELD A-A/INTAKE S	S					1			
	[15] 23115 05030		CLIP-A/CLEANER S	S					4			
	[17] 23160 05040		INSULATOR-A/CLNR MTG #2 S	S					1			
	[21] 23116 05030		BRKT A-A/CLNR MTG S	S					1			
	[28] 92884 0600D		NUT-HEX FLG S	S					2			M6 X 1.0
	[30] 23552 05034		COVER-A/INTAKE SHIELD S	S					1			
	[31] 23555 05030		BRKT A-SHIELD SUPPORT S	S					1			
	[33] 95140 16300		PLUG-BLIND S	S					1			M16 X 300

2421

EXHAUST SYSTEM - G23D

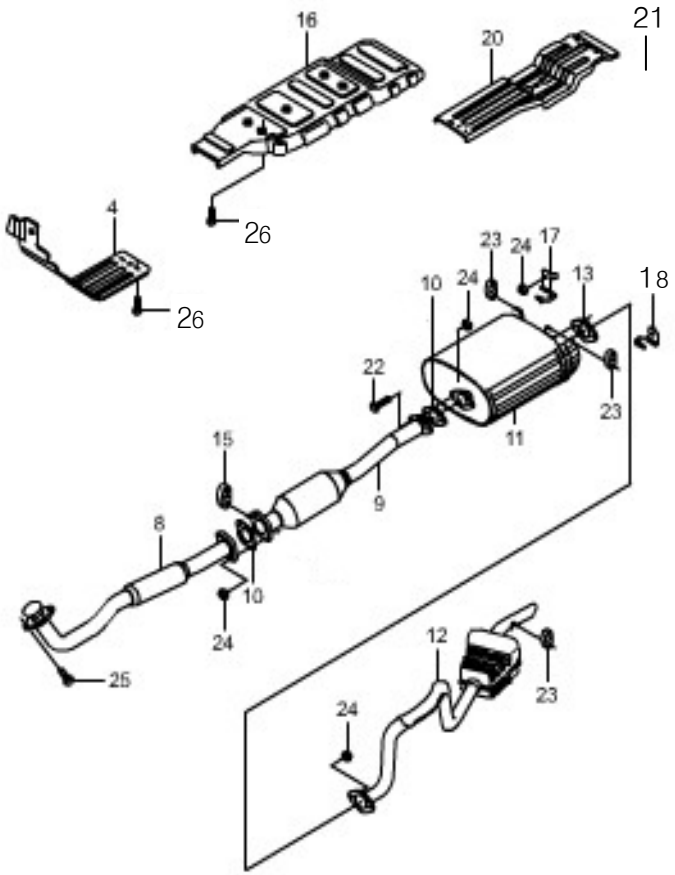

KEY NO.		PART NAME											
			ENGINE							APPLICATION		
ITC	PART NO.	T/M	G23D	G32D			OPTION	L/R	Q'TY	FROM	TO	REMARK
	[04] 24245 05631		HEAT PROTECTOR A-DASH S	S					1			
	[08] 24220 06640		CCC A-COMPLETE S						1			
	[09] 24320 05120		PIPE A-EXH CTR S						1			
	[10] 24221 05120		GASKET S						1			
	[11] 24430 05451		MUFFLER A-COMPLETE S						1			
	[12] 24630 05442		PIPE A-EXH TAIL S						1			
	[13] 24641 05110		GASKET S	S					1			
	[15] 24261 05400		HANGER S	S					1			
	[16] 24249 05032		HEAT PROTECTOR-FLOOR S	S					1			

2421

EXHAUST SYSTEM - G23D

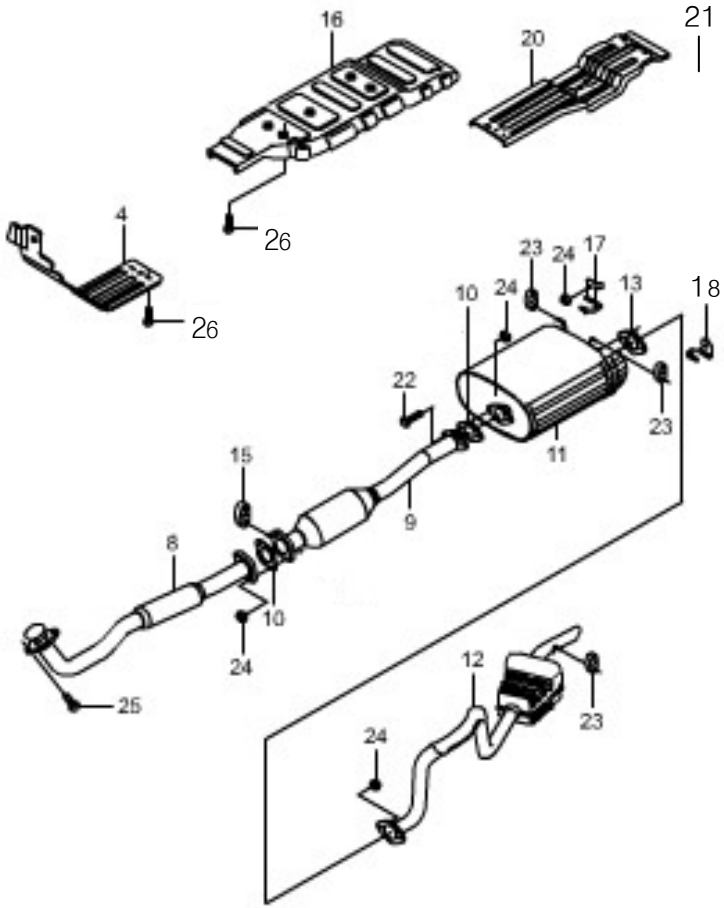

KEY NO.		PART NAME										
			ENGINE							APPLICATION		
ITC	PART NO.	T/M	G23D	G32D			OPTION	L/R	Q'TY	FROM	TO	REMARK
	[17] 24475 07450		ROD A-MUFFLER MTG RR S	S				R	1			
	[18] 24475 07440		ROD A-MUFFLER MTG RR S	S				L	1			
	[20] 24482 05631		HEAT PROTECTOR-FRT FLOOR S	S					1			
	[21] 24481 05032		HEAT PROTECTOR-RR FLOOR S	S					1			
	[22] 91247 1035D		BOLT-HEX S						2			M10 X 1.25 X 35
	[23] 24261 05400		HANGER S	S					2			
	[24] 92896 1000D		NUT-HEX FLG S	S					5			M10 X 1.25
	[25] 92884 0800D		NUT-HEX FLG S	S					2			M8 X 1.25
	[26] 98294 0616D		SCREW-HEX SEMS S						20			M6 X 1.0 X 16

2422

EXHAUST SYSTEM - G32D

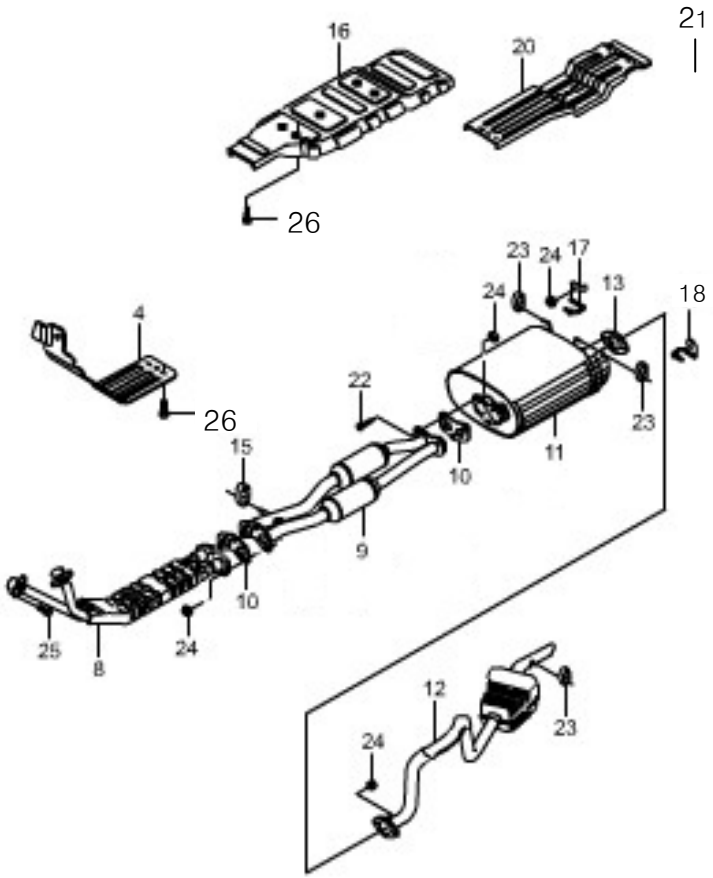

KEY NO.		PART NAME										
			ENGINE							APPLICATION		
ITC	PART NO.	T/M	G23D	G32D			OPTION	L/R	Q'TY	FROM	TO	REMARK
	[04] 24245 05631		HEAT PROTECTOR A-DASH S	S					1			
	[08] 24230 05630		MCC A-COMPLETE S						1			
	[09] 24310 05630		UCC A-COMPLETE S						1			
	[10] 24341 05130		GASKET S						1			
	[11] 24430 05531		MUFFLER A-COMPLETE S						1			
	[12] 24630 05432		PIPE A-EXH TAIL S						1			
	[13] 24641 05110		GASKET S	S					1			
	[15] 24261 05400		HANGER S	S					1			
	[16] 24249 05032		HEAT PROTECTOR-FLOOR S	S					1			

2422

EXHAUST SYSTEM - G32D

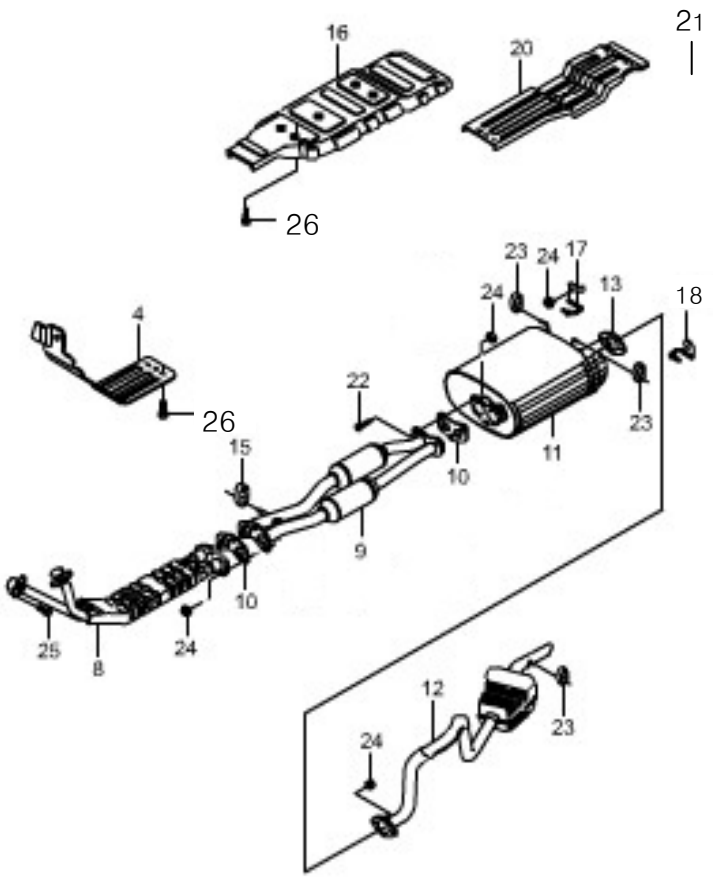

KEY NO.		PART NAME										
			ENGINE							APPLICATION		
ITC	PART NO.	T/M	G23D	G32D			OPTION	L/R	Q'TY	FROM	TO	REMARK
	[17] 24475 07450		ROD A-MUFFLER MTG RR S	S				R	1			
	[18] 24475 07440		ROD A-MUFFLER MTG RR S	S				L	1			
	[20] 24482 05631		HEAT PROTECTOR-FRT FLOOR S	S					1			
	[21] 24481 05032		HEAT PROTECTOR-RR FLOOR S	S					1			
	[22] 91247 1035D		BOLT-HEX	S					3			M10 X 1.25 X 35
	[23] 24261 05400		HANGER S	S					2			
	[24] 92896 1000D		NUT-HEX FLG S	S					5			M10 X 1.25
	[25] 92884 0800D		NUT-HEX FLG S	S					2			M8 X 1.25
	[26] 98294 0616D		SCREW-HEX SEMS	S					15			M6 X 1.0 X 16

2610

BATTERY & CABLE

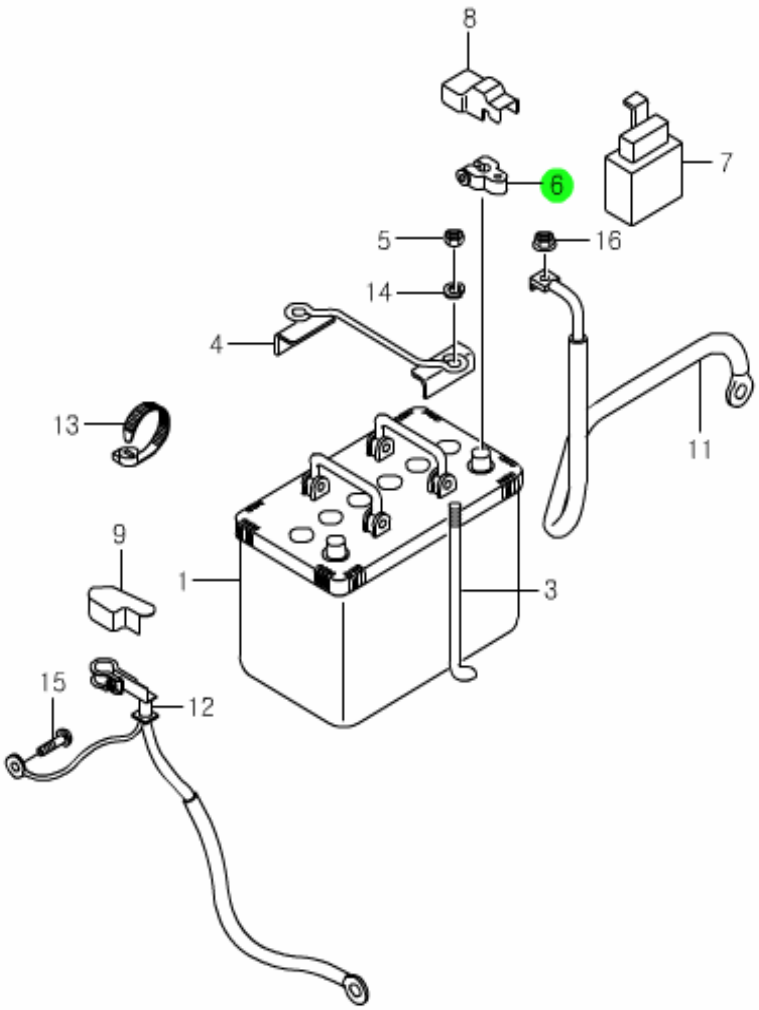

KEY NO.		PART NAME										
ITC	PART NO.	T/M	ENGINE G23D	ENGINE G32D	ENGINE	ENGINE	OPTION	L/R	Q'TY	APPLICATION FROM	APPLICATION TO	REMARK
	[01] 26802 05113		S	S					1			
	[03] 26850 05000		S	S					2			
	[04] 26860 05300		S	S					2			
	[05] 92024 0800D		S	S					2			M8 X 1.25
	[06] 26910 05002		S	S					1			
	[07] 82310 05011		S	S					1			
	[08] 26970 05001		S	S					1			
	[09] 26971 05300		S	S					1			
	[11] 26940 05712		S				&GG2.		1			
	26940 05402			S			&GG3.		1			

2610

BATTERY & CABLE

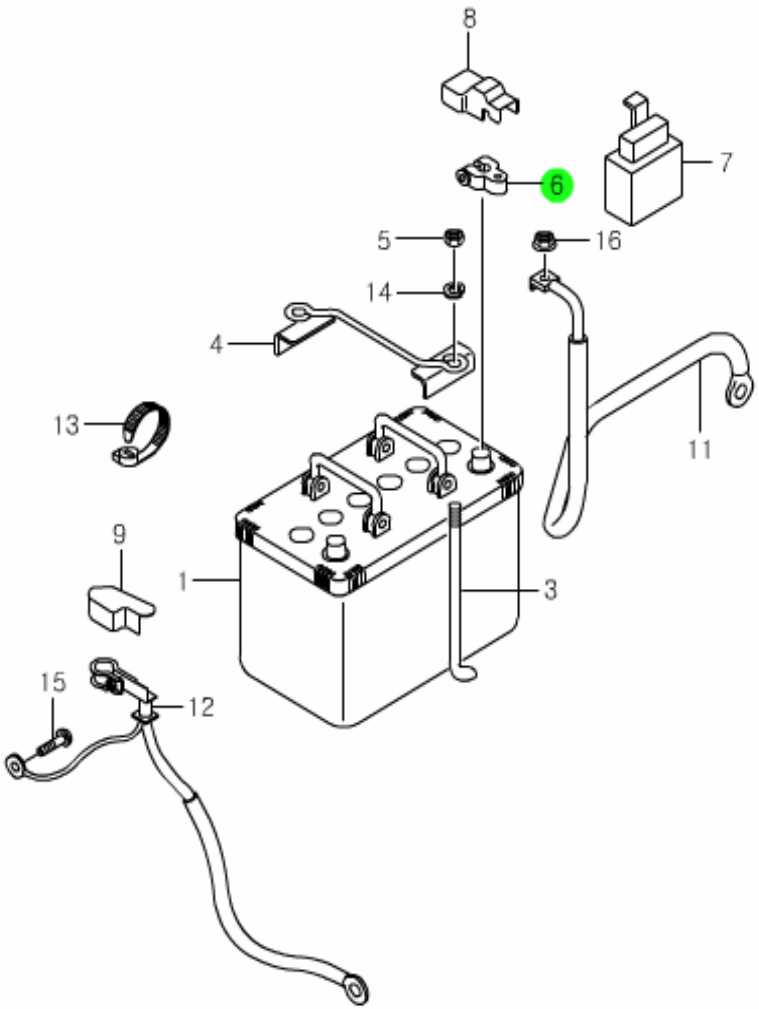

KEY NO.		PART NAME										
			ENGINE							APPLICATION		
ITC	PART NO.	T/M	G23D	G32D			OPTION	L/R	Q'TY	FROM	TO	REMARK
	[12] 26950 05102		CABLE A-BATT GROUND S	S					1			
	[13] 26960 05100		CLIP-STUD BOLT S	S					1			
	[14] 93310 0800D		WASHER-SPRING S	S					2			M8
	[15] 99004 06000		BOLT-EARTH-7-D S	S					1			M6 X 1.0 X 16
	[16] 92884 0800D		NUT-HEX FLG S	S					1			M8 X 1.25

3 TRANSMISSION

3010 MANUAL TRANSMISSION CLUTCH DISC
3020 CLUTCH CONTROL
3030 CLUTCH PEDAL
3110 TRANSMISSION(AT&MT) & TCU CONTROL SYTEM
3140 MANUAL TRANSMISSION-4WD
3141 CLUTCH HOUSING-4WD
3142 OUTPUT & INPUT SHAFT-4WD
3143 COUNT SHAFT GEAR-4WD
3144 ADAPTOR-4WD
3145 RAIL & SHIFTFORK-4WD
3146 SHIFTER & EXTENTION-4WD
3160 MANUAL TRANSMISSION - 2WD
3161 CLUTCH HOUSING-2WD
3162 OUTPUT & INPUT SHAFT-2WD
3163 COUNT SHAFT GEAR-2WD
3164 ADAPTOR -2WD
3165 RAIL & SHIFTFORK-2WD
3166 SHIFT & EXTENSION-2WD
3176 SHIFTER & LEVEL-2WD
3210 TRANSFER CASE-PART TIME
3211 TRANSFER CASE-PART TIME
3212 TRANSFER CASE-PART TIME
3310 PROPELLER SHAFT
3610 AUTOMATIC TRANSMISSION,4WD (DSI M74)
3611 CONVERTER HOUSING & OIL PAN (DSI M74)
3612 TRANSMISSION HOUSING(DSI M74)
3613 VALVE BODY(DSI M74)
3614 OIL PAN(DSI M74)
3615 CLUTCH(DSI M74)
3616 OUTPUT SHAFT(DSI M74)
3710 MANUAL SHIFT CONTROL
3740 AUTO SHIFT CONTROL
3750 AUTO COOLING SYSTEM

3010

MANUAL TRANSMISSION CLUTCH DISC

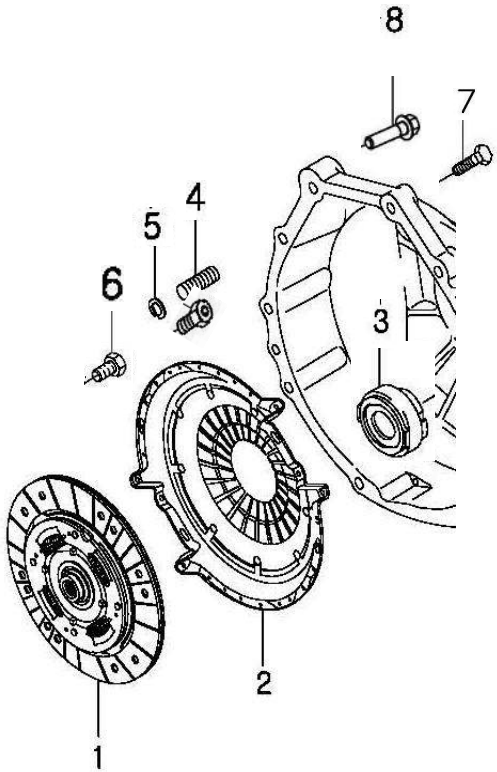

KEY NO.		PART NAME										
			ENGINE							APPLICATION		
ITC	PART NO.	T/M	G23D	G32D			OPTION	L/R	Q'TY	FROM	TO	REMARK
	[01] PB07A-0500	M	DISC ASSY-CLUTCH S						1			
	[02] PB07A-0600	M	COVER ASSY-CLUTCH S						1			
	[03] PB07C-0111	M	BEARING-CLUTCH RELEASE S						1			
	[04] 91708 08181	M	BOLT-SOCKET S						6			M8X1.25
	[05] 93384 0800D	M	WASHER-WAVE S						6			M8
	[07] 99020 10003	M	BOLT-W/WAVE S						8			M10X1.5X40,8.8

3020

CLUTCH CONTROL

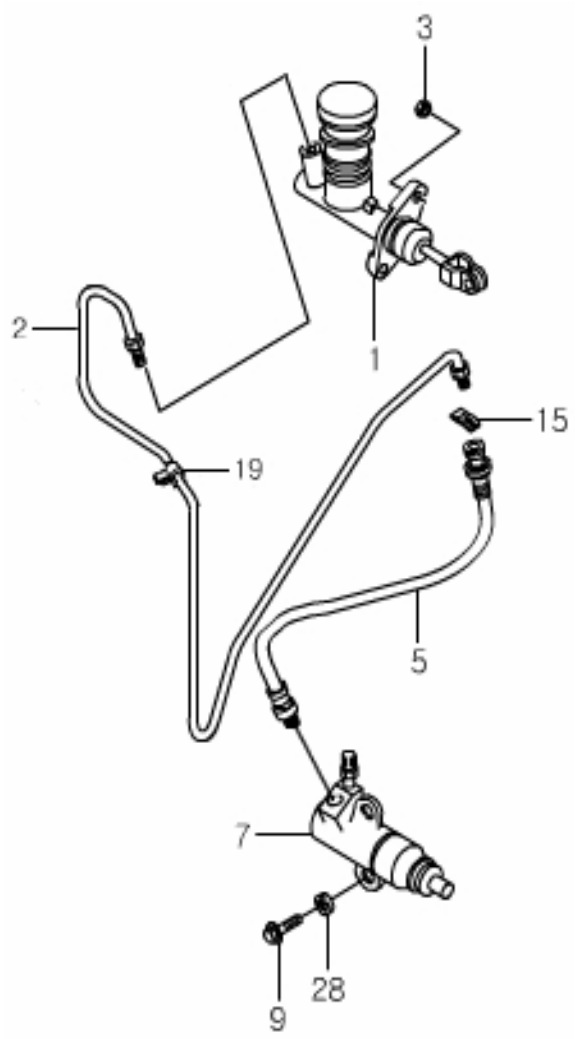

KEY NO.		PART NAME										
			ENGINE							APPLICATION		
ITC	PART NO.	T/M	G23D	G32D			OPTION	L/R	Q'TY	FROM	TO	REMARK
	[01] 30510 05003	M	CYLINDER A-CLUTCH MASTER S				&PM0.		1			
	[02] 30520 05900	M	TUBE A-M/CYL TO R/CYL S				&PM0.		1			
	[03] 92884 0800D	M	NUT-HEX FLG S				&PM0.		2			M8 X 1.26
	[05] 30530 05121	M	HOSE A-CLUTCH S				&PM0.		1			
	[07] 30540 05012	M	CYLINDER A-CLUTCH RELEASE S				&PM0.		1			
	[09] 95804 1025D	M	BOLT-HEX SEMS S				&PM0.		2			M10 X 1.5 X 26
	[15] 48735 03002	M	CLIP-FLEXIBLE HOSE S				&PM0.		1			
	[19] 48691 05000	M	CLIP-BRAKE TUBE MTG S				&PM0.		1			
	[28] 48716 03000	M	GASKET-BRK HOSE TO CALIPER S				&PM0.		1			

3030

CLUTCH PEDAL

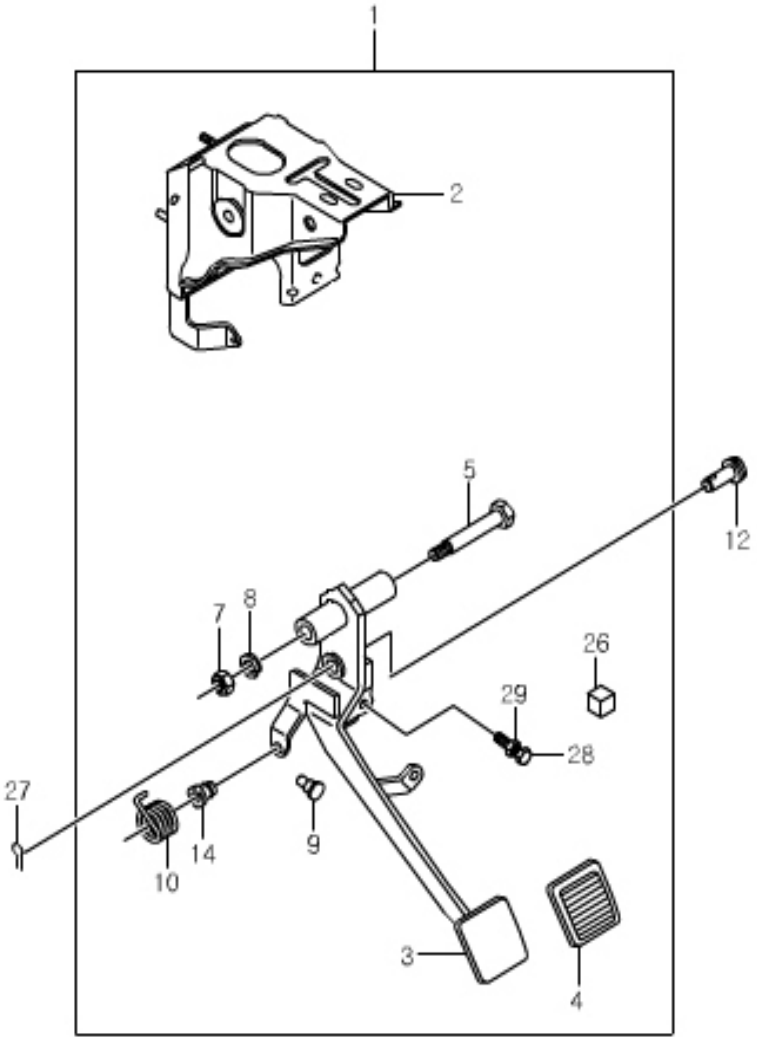

KEY NO.		PART NAME											
			ENGINE							APPLICATION		
ITC	PART NO.	T/M	G23D	G32D			OPTION	L/R	Q'TY	FROM	TO	REMARK
	[01] 30400 05901	M	BOX A-CLUTCH PEDAL S				&PM0.		1			
	[02] 30420 06000	M	BRKT A-CLUTCH PEDAL MTG S				&PM0.		1			
	[03] 30410 05000	M	PEDAL A-CLUTCH S				&PM0.		1			
	[04] 48866 03000	M	PAD-CLUTCH PEDAL S				&PM0.		1			
	[05] 30432 05000	M	FULCRUM-CLUTCH PEDAL S				&PM0.		1			
	[07] 92034 10001	M	NUT-HEX S				&PM0.		1			M10 X 1.26
	[08] 93310 10001	M	WASHER-SPRING S				&PM0.		1			M11
	[09] 30415 05001	M	PAD-STOPPER CONTACT S				&PM0.		1			
	[10] 30434 05001	M	SPRING S				&PM0.		1			

3030

CLUTCH PEDAL

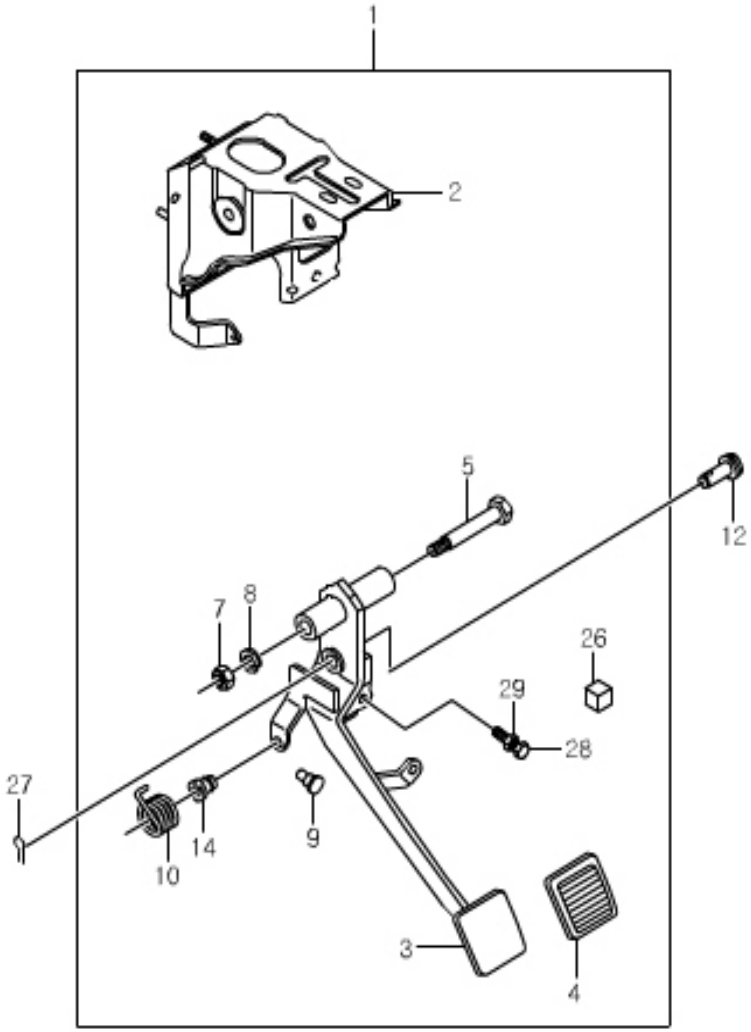

KEY NO.		PART NAME										
			ENGINE							APPLICATION		
ITC	PART NO.	T/M	G23D	G32D			OPTION	L/R	Q'TY	FROM	TO	REMARK
	[12] 30460 05001	M	PIN-CLEVIS S				&PM0.		1			
	[14] 30433 05010	M	BUSHING-C/PDL SPRG S				&PM0.		2			
	[26] 85760 06001	M	SWITCH A-CLUTCH INTERLOCK S				&PM0.		1			
	[27] 95314 10001	M	PIN-SNAP S				&PM0.		1			M11
	[28] 91347 10301	M	BOLT-HEX S				&PM0.		1			M10 X 1.26
	[29] 92114 10001	M	NUT-LOCK S				&PM0.		1			M10 X 1.26

3110

TRANSMISSION(AT&MT) & TRANSFER CASE ATTACH

TCU CONTROL SYSTEM

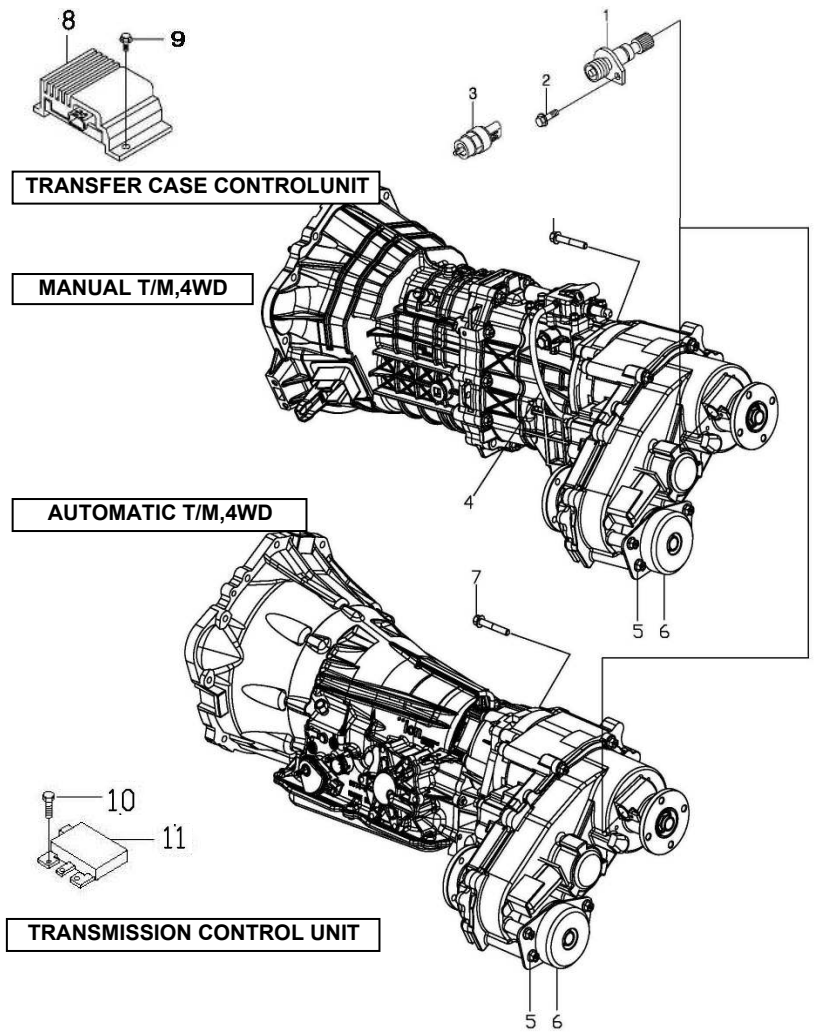

KEY NO.		PART NAME											
			ENGINE							APPLICATION		
ITC	PART NO.	T/M	G23D	G32D			OPTION	L/R	Q'TY	FROM	TO	REMARK
	[01]		ADAPTER GEAR ASSY-S/M									
	PB07C-0119		S				BLUE		1			18T
	PB07C-0120		S	S			WHITE		1			19T
	[02]		BOLT-HEX									
	90014 20161		S						1			1/4-20UNCX16L
	[03]		SENSOR ASSY-SPEEDO									
	81340 05002		S	S					1			
	[04]		HOSE-AIR VENT									
	PB07E-0101		S						1			
	[05]		BOLT-HEX,FLANGE									
	91627 1025D		S						4			
	[06]		DAMPER ASSY-PLANE									
	32040 05311		S						1			
	32040 05312			S					1			
	[07]		BOLT-HEX,FLANGE									
	91608 1040D		S	S					5			
	[08]		UNIT-T/C CONTROL									
	PB07D-1000			S					1			

3110

TRANSMISSION(AT&MT) & TRANSFER CASE ATTACH

TCU CONTROL SYSTEM

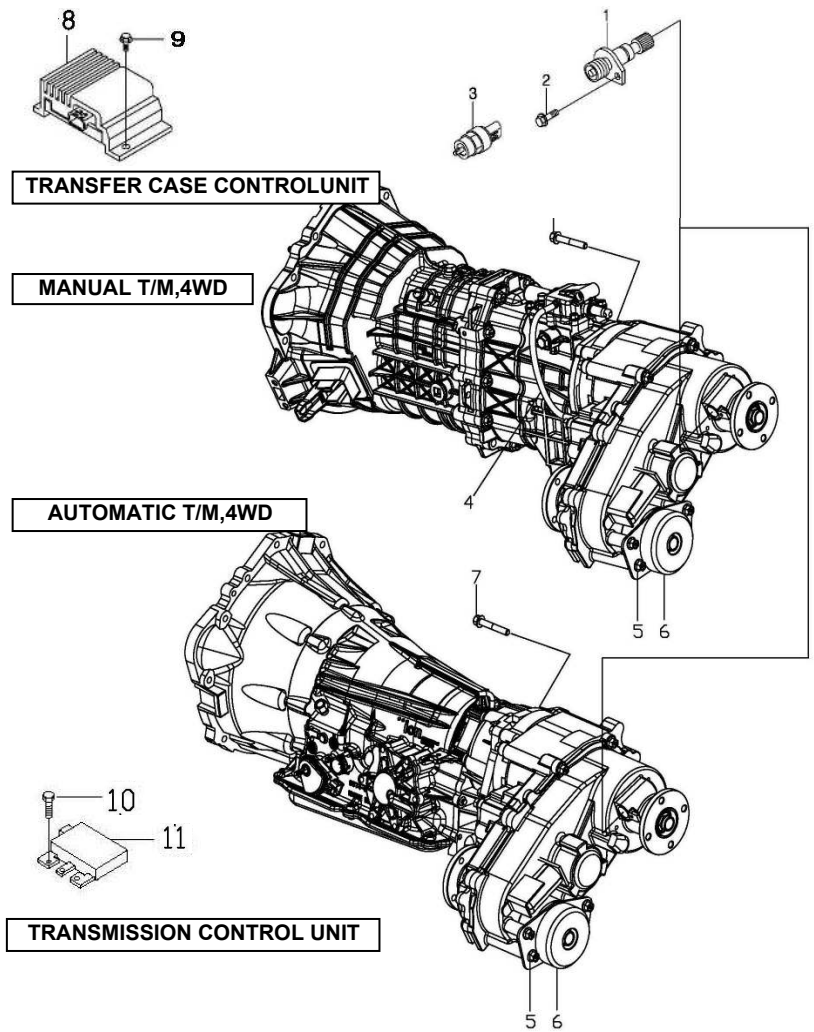

KEY NO.		PART NAME										
			ENGINE							APPLICATION		
ITC	PART NO.	T/M	G23D	G32D			OPTION	L/R	Q'TY	FROM	TO	REMARK
	[09] 98244 0616D		BOLT-HEX SEMS S						2			M6X1.0X16
	[10] 98274 0616D	A	BOLT-HEX SEMS S						2			M6X1.0X16
	[11] PB07D-1000	A	UNIT-T/M CONTROL S						1			

3140

MANUAL TRANSMISSION - 4WD

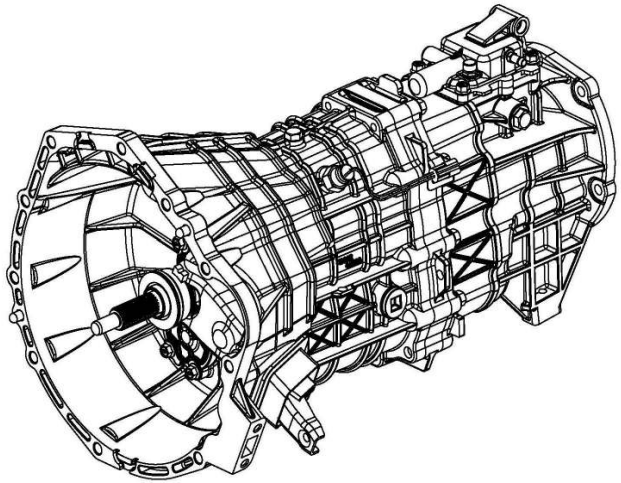

KEY NO.		PART NAME										
			ENGINE							APPLICATION		
ITC	PART NO.	T/M	G23D	G32D			OPTION	L/R	Q'TY	FROM	TO	REMARK
	PB07C-2100		TRANSMISSION ASS`Y									
		M	S						1			

3141

CLUTCH HOUSING - 4WD

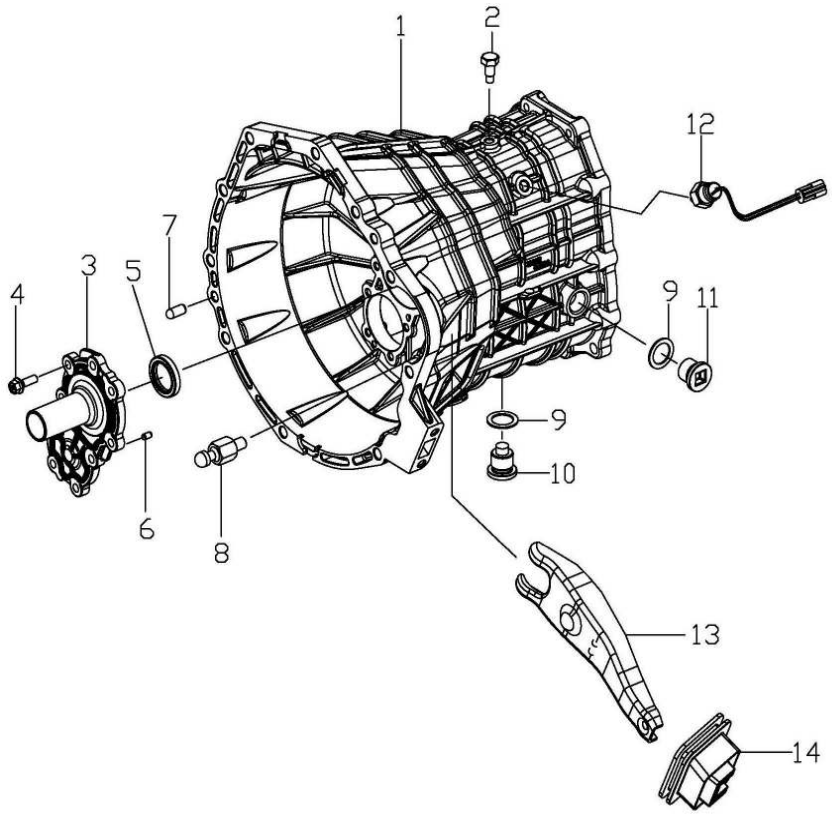

KEY NO.		PART NAME										
			ENGINE							APPLICATION		
ITC	PART NO.	T/M	G23D	G32D			OPTION	L/R	Q'TY	FROM	TO	REMARK
	[01] PB07C-0002	M	HOUSING-TM S						1			
	[02] PB07C-0086	M	BOLT-INTER LOCK S						1			
	[03] PB07C-0008	M	COVER-FRONT S						1			
	[04] PB07C-0009	M	BOLT-FLANGE S						9			
	[05] PB07C-0010	M	SEAL-OIL,INPUT S						1			
	[06] PB07C-0007	M	PIN-DOWEL S						2			
	[07] PB07C-0149	M	PIN-PARALLER S						2			
	[08] PB07C-0112	M	PIN-PIVOT S						1			
	[09] PB07C-0006	M	GASKET-OIL PLUG S						2			

3141

CLUTCH HOUSING - 4WD

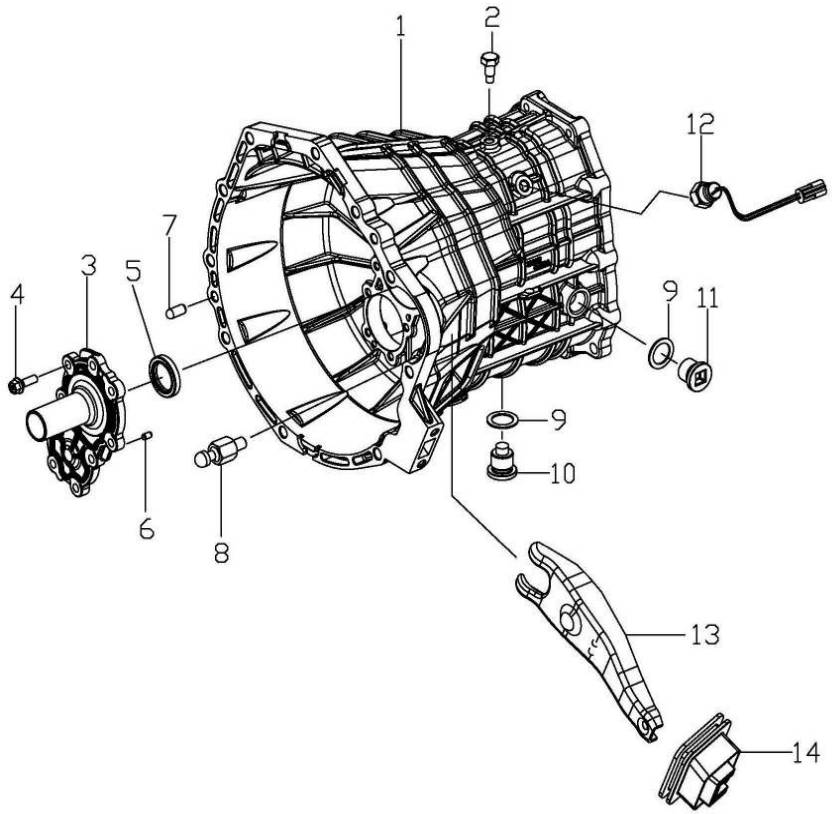

KEY NO.		PART NAME										
			ENGINE							APPLICATION		
ITC	PART NO.	T/M	G23D	G32D			OPTION	L/R	Q'TY	FROM	TO	REMARK
	[10] PA07C-0021	M	PLUG-ASS`Y, DRAIN S						1			
	[11] PA07C-0011	M	PLUG-OIL FILLER S						1			
	[12] PB07C-0106	M	SWITCH ASSY-BACK LAMP S						1			
	[13] PB07C-0113	M	FORK ASSY-CLUTCH RELEASE S						1			
	[14] PB07C-0117	M	BOOT-CLUTCH RELEASE FORK S						1			

3142

OUTPUT & INPUT SHAFT - 4WD

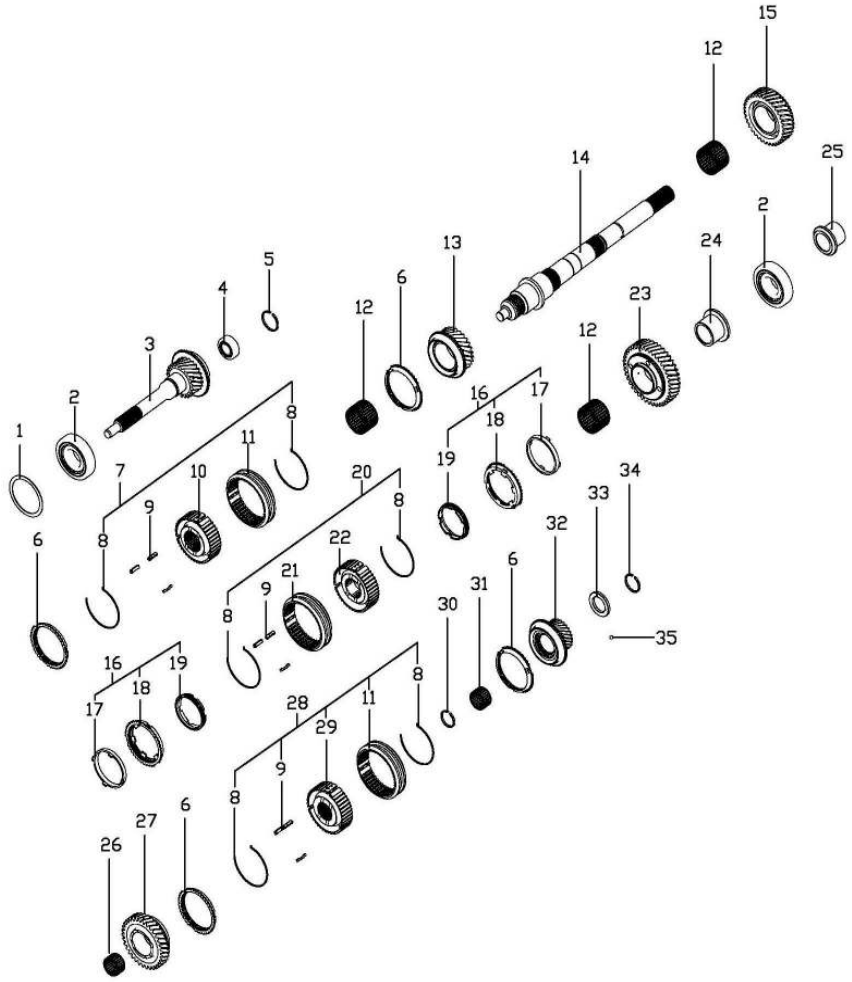

KEY NO.		PART NAME										
			ENGINE							APPLICATION		
I T C	PART NO.	T / M	G 2 3 D	G 3 2 D			OPTION	L / R	Q - T Y	FROM	TO	REMARK
	[01]		SHIM-INPUT									
	PB07C-0011-001	M	S						1			T=0.55
	PB07C-0011-002	M	S						1			T=0.60
	PB07C-0011-003	M	S						1			T=0.65
	PB07C-0011-004	M	S						1			T=0.70
	PB07C-0011-005	M	S						1			T=0.75
	PB07C-0011-006	M	S						1			T=0.80
	PB07C-0011-007	M	S						1			T=0.85
	PB07C-0011-008	M	S						1			T=0.90
	PB07C-0011-009	M	S						1			T=0.95
	PB07C-0011-010	M	S						1			T=1.00
	PB07C-0011-011	M	S						1			T=1.05
	PB07C-0011-012	M	S						1			T=1.10
	PB07C-0011-013	M	S						1			T=1.15
	PB07C-0011-014	M	S						1			T=1.20
	[02]		BEARING-TAPER ROLLER,MAIN									
	PB07C-0012	M	S						2			
	[03]		SHAFT ASS`Y-INPUT, SMF									
	PB07C-0014	M	S						1			
	[04]		BEARING-TAPER ROLLER,PILOT									
	PB07C-0013	M	S						1			

3142

OUTPUT & INPUT SHAFT - 4WD

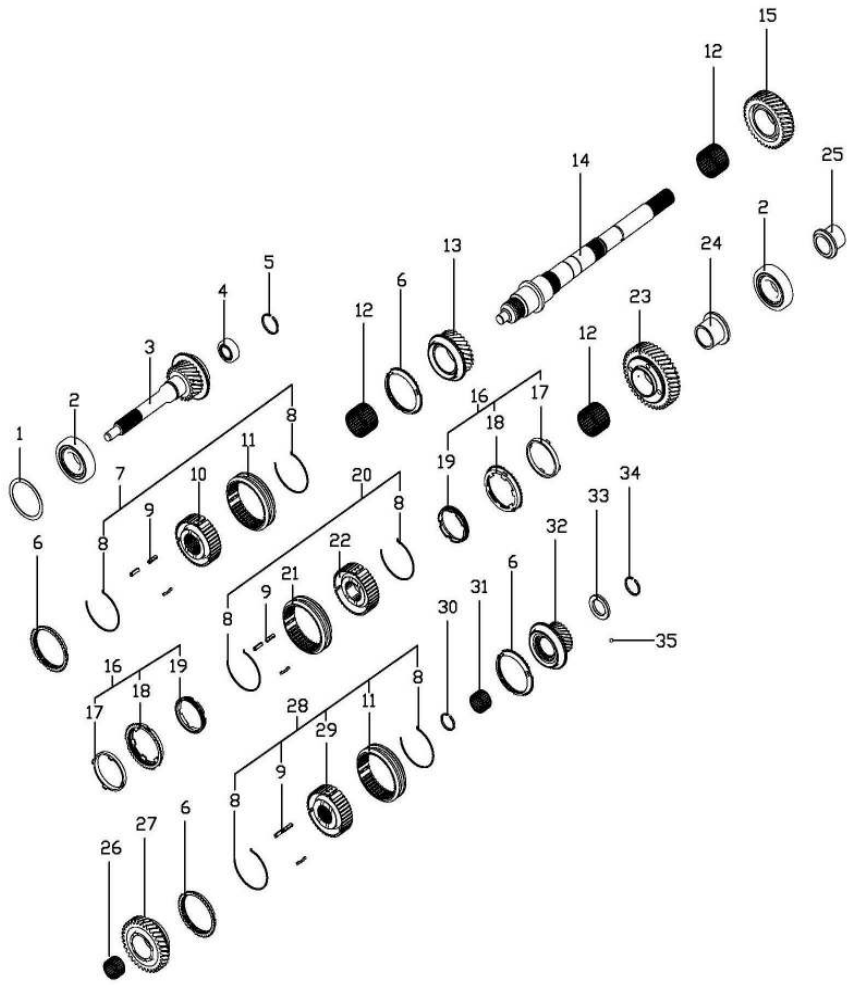

KEY NO.		PART NAME										
			ENGINE						APPLICATION			
ITC	PART NO.	T/M	G23D	G32D			OPTION	L/R	Q'TY	FROM	TO	REMARK
	[05]		RING-RETAINER,3RD&4TH HUB									
	PB07C-0037-001	M	S						1			T=2.80
	PB07C-0037-002	M	S						1			T=2.85
	PB07C-0037-003	M	S						1			T=2.90
	[06]		RING-SYNCHRO									
	PB07C-0100	M	S						4			
	[07]		HUB-SYN ASSY,1&2									
	PB07C-0135	M	S						1			
	[08]		SPRING-SYNCHRO									
	PB07C-0028	M	S						6			
	[09]		KEY-SYNCHRO									
	PB07C-0029	M	S						9			
	[10]		HUB-SYNCHRO,1ST&2ND									
	PB07C-0027	M	S						1			
	[11]		SLEEVE-SYNCHRO,SINGLE									
	PB07C-0036	M	S						2			
	[12]		BEARING-NEEDLE1ST&2ND&3RD									
	PB07C-0021	M	S						3			
	[13]		GEAR ASS`Y-3RD									
	PB07C-0033	M	S						1			

3142

OUTPUT & INPUT SHAFT - 4WD

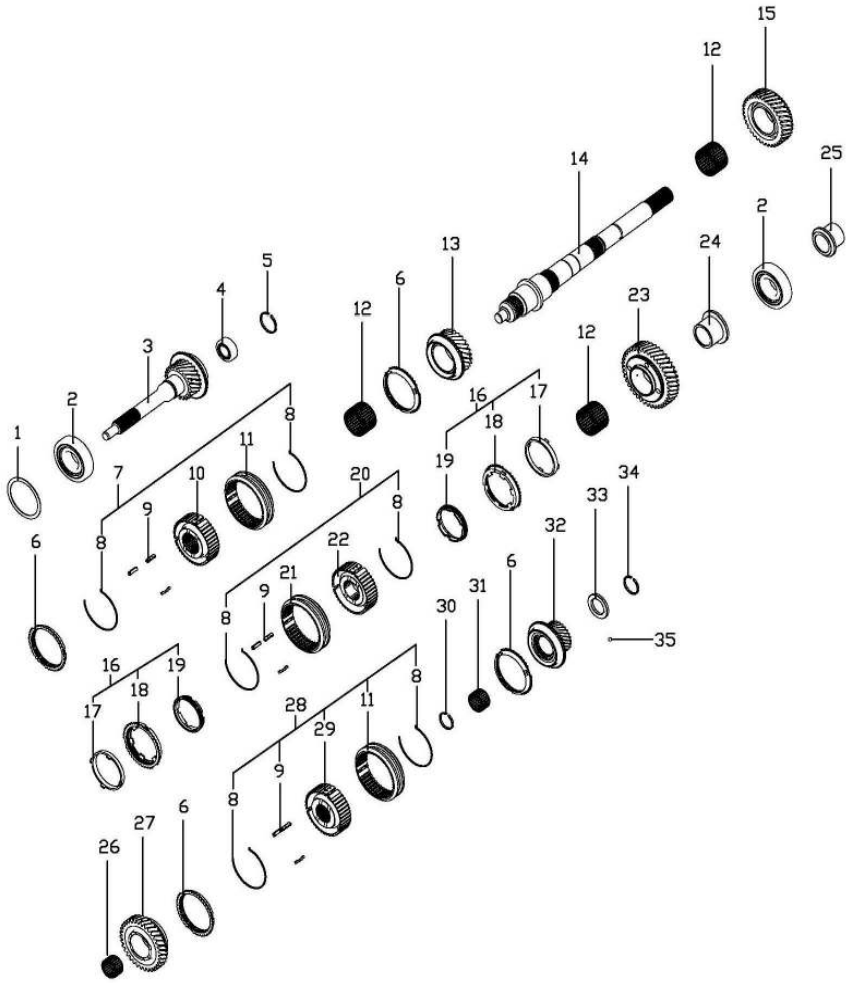

KEY NO.		PART NAME										
			ENGINE							APPLICATION		
ITC	PART NO.	T/M	G23D	G32D			OPTION	L/R	Q'TY	FROM	TO	REMARK
	[14] PB07C-2002	M	SHAFT-MAIN,4WD S						1			
	[15] PB07C-0031	M	GEAR ASS`Y-2ND S						1			
	[16] PB07C-0023	M	SYNCHRO RING ASS`Y-DOUBLE S						2			
	[17] PB07C-0025	M	MIDDLE RING-SYNCHRO S						2			
	[18] PB07C-0026	M	OUTER RING-SYNCHRO S						2			
	[19] PB07C-0024	M	INNER RING-SYNCHRO S						2			
	[20] PB07C-0136	M	HUB-SYN ASSY,3&4 S						1			
	[21] PB07C-0030	M	SLEEVE-SYNCHRO,DOUBLE S						1			
	[22] PB07C-0035	M	HUB-SYNCHRO,3RD&4TH S						1			

3142

OUTPUT & INPUT SHAFT - 4WD

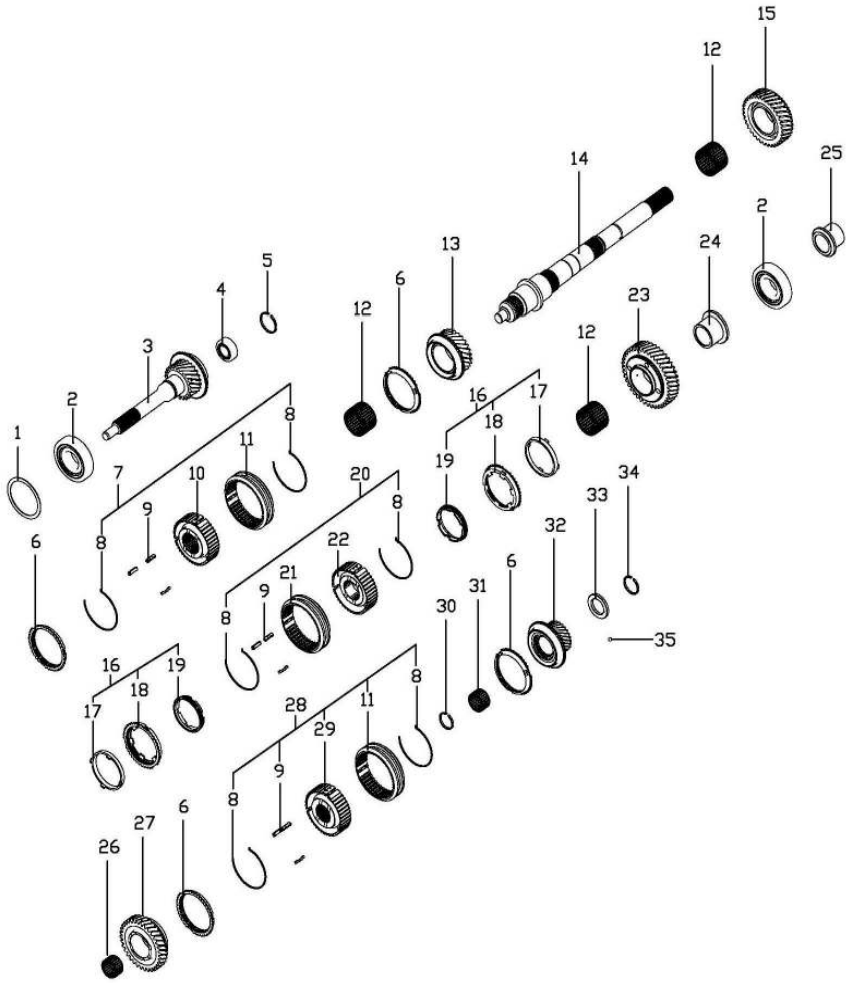

KEY NO.		PART NAME										
			ENGINE							APPLICATION		
ITC	PART NO.	T/M	G23D	G32D			OPTION	L/R	Q'TY	FROM	TO	REMARK
	[23] PB07C-0038	M	GEAR ASSY-REV. S						1			
	[24] PB07C-0022	M	SLEEVE-BRG,1ST. S						1			
	[25] PB07C-0041	M	SLEEVE-BRG,REV. S						1			
	[26] PB07C-0040	M	BEARING-NEEDLE,REV. S						1			
	[27] PB07C-0044	M	GEAR ASSY-5TH S						1			
	[28] PB07C-0137	M	HUB-SYN ASSY,5TH&REV. S						1			
	[29] PB07C-0042	M	HUB-5TH&REV. S						1			
	[30] PB07C-0043	M	RING-RETAINER S						1			
	[31] PB07C-0047	M	BEARING-NEEDLE,5TH S						1			

3142

OUTPUT & INPUT SHAFT - 4WD

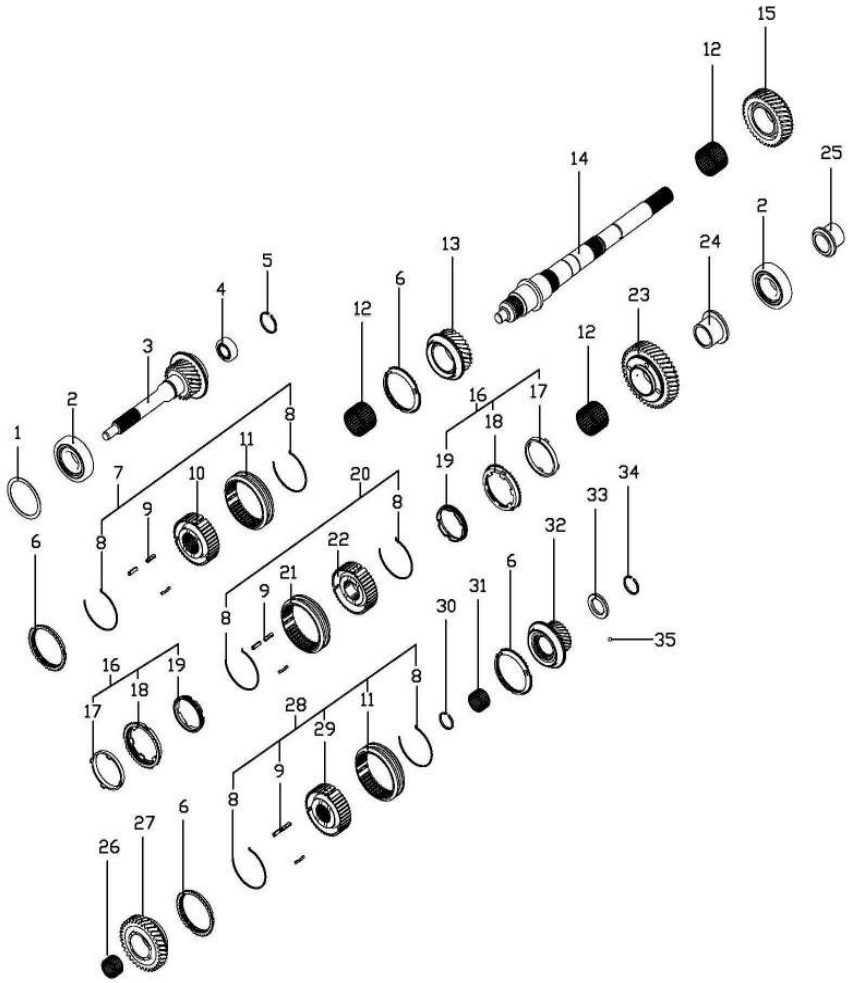

KEY NO.		PART NAME										
			ENGINE							APPLICATION		
ITC	PART NO.	T/M	G23D	G32D			OPTION	L/R	Q'TY	FROM	TO	REMARK
	[32]		GEAR ASSY-5TH									
	PB07C-0044	M	S						1			
	[33]		WASHER-THRUST,5TH									
	PB07C-0048	M	S						1			
	[34]		RING-RETAINER,5TH&IDLER SHAFT									
	PB07C-0050-001	M	S						1			T=2.80
	PB07C-0050-002	M	S						1			T=2.85
	PB07C-0050-003	M	S						1			T=2.90
	PB07C-0050-004	M	S						1			T=2.95
	PB07C-0050-005	M	S						1			T=3.00
	PB07C-0050-006	M	S						1			T=3.05
	PB07C-0050-007	M	S						1			T=3.10
	PB07C-0050-008	M	S						1			T=3.15
	[35]		BALL-STEEL									
	H7201-05004	M	S						1			

3143

COUNT SHAFT GEAR - 4WD

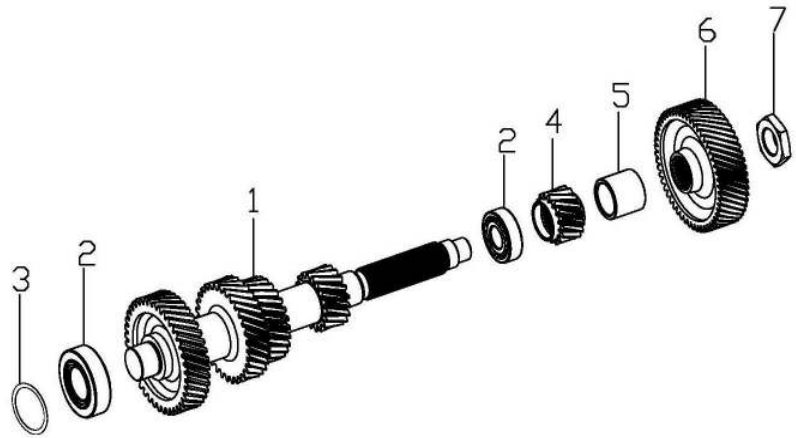

KEY NO.		PART NAME										
			ENGINE							APPLICATION		
I T C	PART NO.	T / M	G 2 3 D	G 3 2 D			OPTION	L / R	Q - T Y	FROM	TO	REMARK
	[01]		SHAFT-COUNTER									
	PB07C-0057	M	S						1			
	[02]		BRG-TAPER ROLLER,C/S									
	PB07C-0055	M	S						2			
	[03]		SHIM-C/S									
	PB07C-0054-001	M	S						1			T=0.60
	PB07C-0054-002	M	S						1			T=0.70
	PB07C-0054-003	M	S						1			T=0.75
	PB07C-0054-004	M	S						1			T=0.85
	PB07C-0054-005	M	S						1			T=0.90
	PB07C-0054-006	M	S						1			T=0.95
	PB07C-0054-007	M	S						1			T=1.00
	PB07C-0054-008	M	S						1			T=1.05
	PB07C-0054-009	M	S						1			T=1.10
	PB07C-0054-010	M	S						1			T=1.15
	PB07C-0054-011	M	S						1			T=1.20
	PB07C-0054-012	M	S						1			T=1.25
	[04]		GEAR REV-C/S									
	PB07C-0058	M	S						1			
	[05]		SPACER-C/S									
	PB07C-0060	M	S						1			
	[06]		GEAR 5TH, C/S									
	PB07C-0059	M	S						1			

3143

COUNT SHAFT GEAR - 4WD

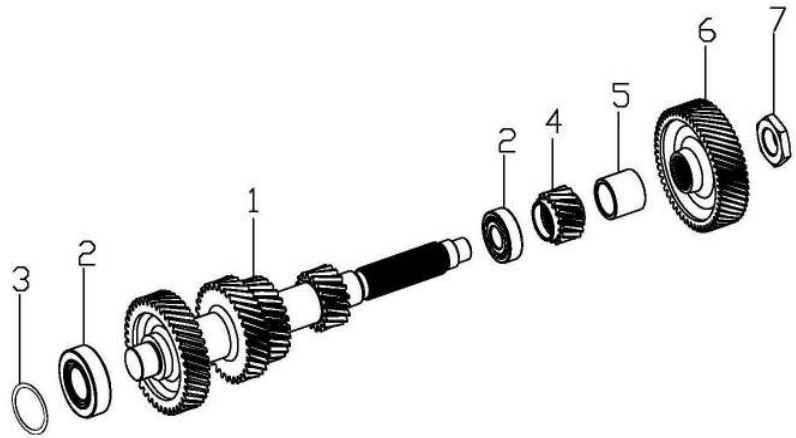

KEY NO.		PART NAME										
			ENGINE						APPLICATION			
ITC	PART NO.	T/M	G23D	G32D			OPTION	L/R	Q'TY	FROM	TO	REMARK
	[07] PB07C-0056	M	NUT-LOCK, C/S S						1			

3144

ADAPTOR - 4WD

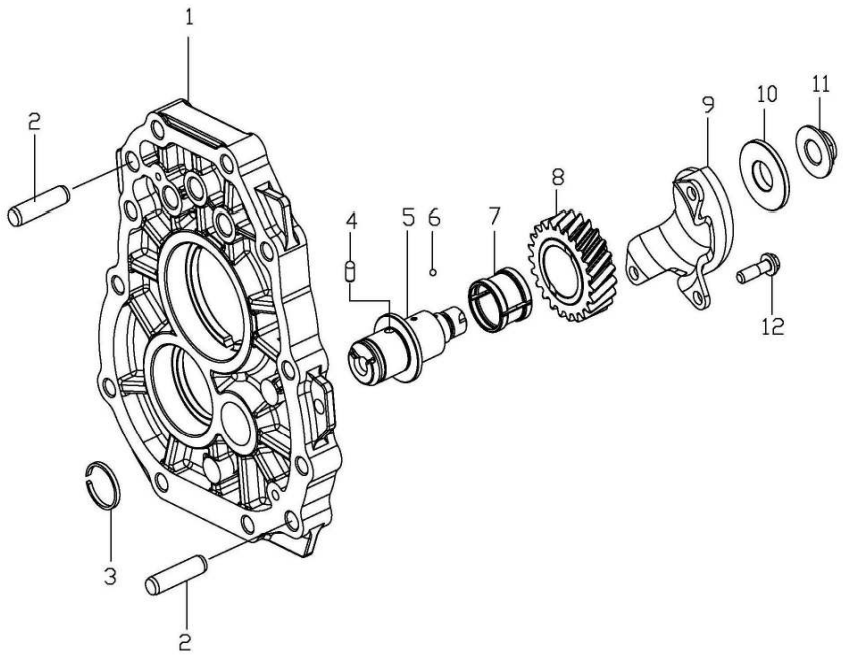

KEY NO.		PART NAME										
			ENGINE							APPLICATION		
ITC	PART NO.	T/M	G23D	G32D			OPTION	L/R	Q'TY	FROM	TO	REMARK
	[01]		ADAPTOR-T/M									
	PB07C-0003	M	S						1			
	[02]		PIN-DOWEL,ADAPTOR									
	PB07C-0005	M	S						2			
	[03]		RING-RETAINER,5TH& IDLER SHAFT									
	PB07C-0050-001	M	S						1			T=2.80
	PB07C-0050-002	M	S						1			T=2.85
	PB07C-0050-003	M	S						1			T=2.90
	PB07C-0050-004	M	S						1			T=2.95
	PB07C-0050-005	M	S						1			T=3.00
	PB07C-0050-006	M	S						1			T=3.05
	PB07C-0050-007	M	S						1			T=3.10
	PB07C-0050-008	M	S						1			T=3.15
	[04]		PIN-DOWEL									
	PB07C-0007	M	S						1			
	[05]		SHAFT-REVERSE IDLER									
	PB07C-0064	M	S						1			
	[06]		BOLL-STEEL									
	H7201-05004	M	S						1			
	[07]		BEARING-NEEDLE,IDLER									
	PB07C-0063	M	S						1			

3144

ADAPTOR - 4WD

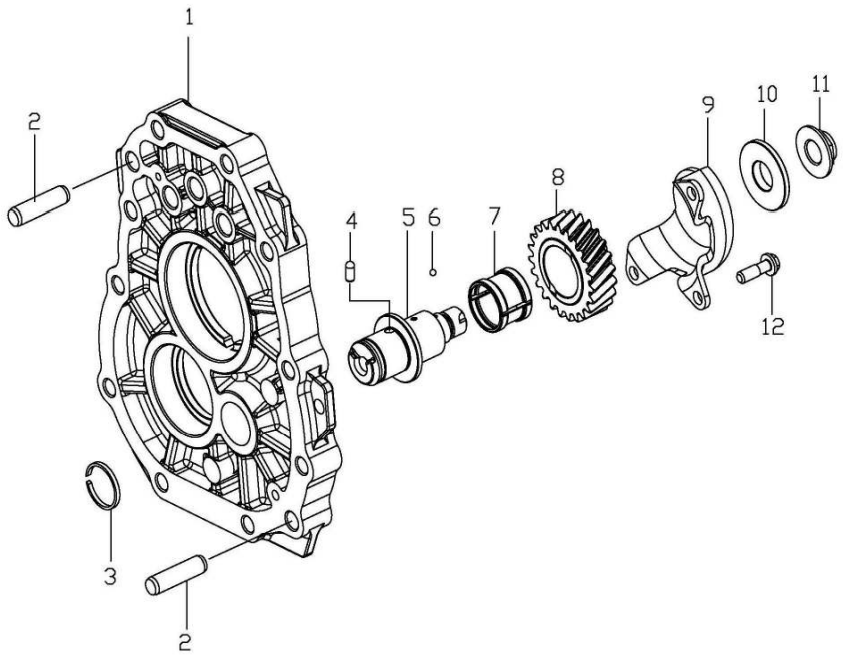

KEY NO.		PART NAME										
			ENGINE							APPLICATION		
ITC	PART NO.	T/M	G23D	G32D			OPTION	L/R	Q'TY	FROM	TO	REMARK
	[08] PB07C-0062	M	GEAR-REV.IDLER S						1			
	[09] PB07C-0068	M	BRK`T-IDLER S						1			
	[10] PB07C-0065	M	SPACER-REVERSE IDLER S						1			
	[11] PB07C-0066	M	NUT-LOCK S						1			
	[12] PB07C-0067	M	BOLT-HEX,SEMS S						3			

3145

RAIL & SHIFT FORK - 4WD

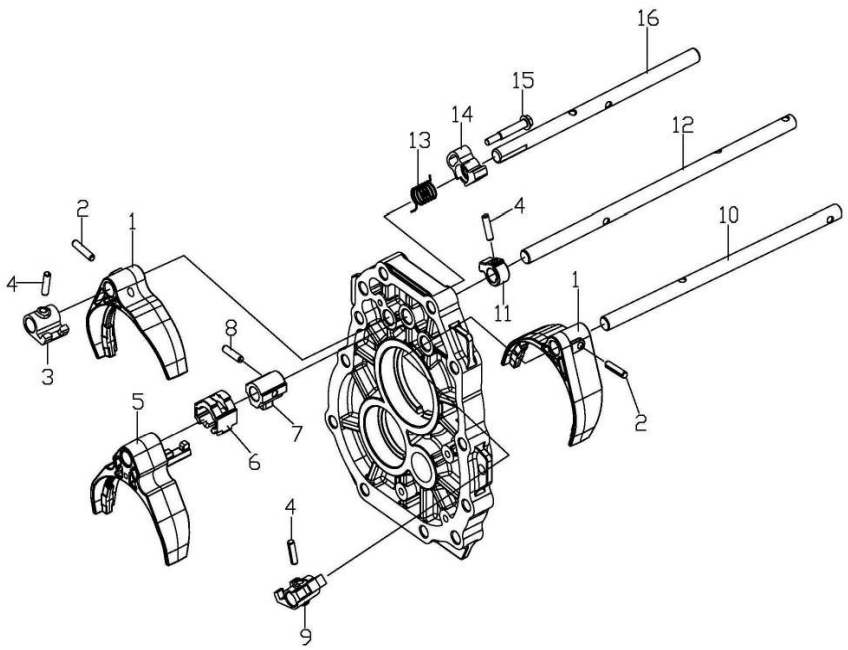

KEY NO.		PART NAME										
			ENGINE							APPLICATION		
ITC	PART NO.	T/M	G23D	G32D			OPTION	L/R	Q'TY	FROM	TO	REMARK
	[01] PB07C-0073	M	FORK-SHIFT,1&2,5&R S						2			
	[02] PB07C-0074	M	PIN-SPRING,FORK,SHIFT S						2			
	[03] PB07C-0070	M	LUG-SHIFT,1&2 S						1			
	[04] PB07C-0072	M	PIN-SPRING S						3			
	[05] PB07C-0098	M	FORK&BUSH ASSY-SHIFT,3&4 S						1			
	[06] PB07C-0080	M	PLATE-INTER LOCK S						1			
	[07] PB07C-0079	M	LEVER-SHIFT,INNER S						1			
	[08] PB07C-0094	M	PIN-SPRING S						1			
	[09] PB07C-0071	M	LUG-SHIFT,5&R S						1			

3145

RAIL & SHIFT FORK - 4WD

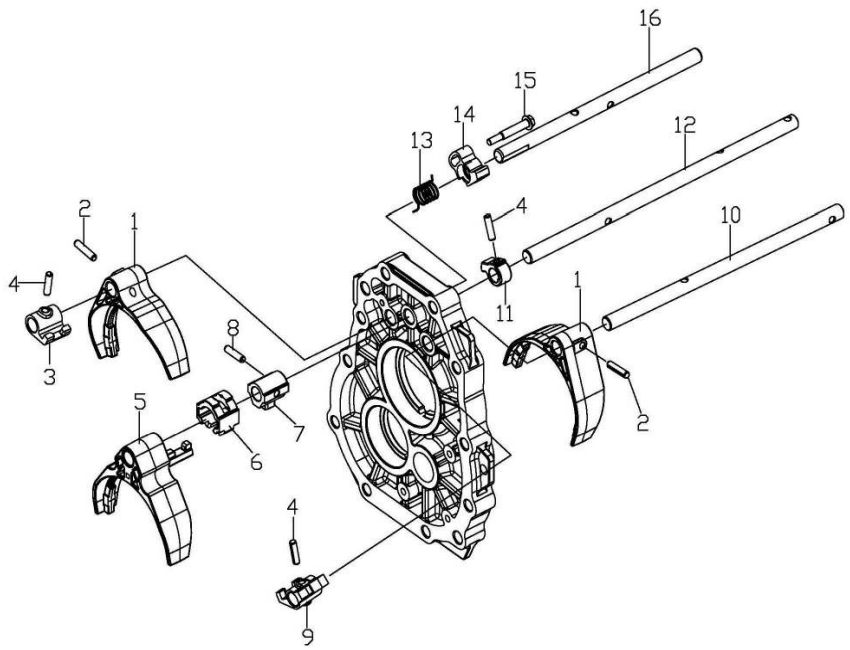

KEY NO.		PART NAME										
			ENGINE							APPLICATION		
ITC	PART NO.	T/M	G23D	G32D			OPTION	L/R	Q'TY	FROM	TO	REMARK
	[10] PB07C-0081	M	RAIL-SHIFT,5&R S						1			
	[11] PB07C-0084	M	PLATE-STOPPER S						1			
	[12] PB07C-0075	M	RAIL-SHIFT,3&4 S						1			
	[13] PB07C-0082	M	SPRING-REVERSE LOCK S						1			
	[14] PB07C-0083	M	PLATE-REVERSE LOCK S						1			
	[15] PB07C-0085	M	BOLT-REVERSE LOCK S						1			
	[16] PB07C-0069	M	RAIL-SHIFT,1&2 S						1			

3146

SHIFT & EXTENSION - 4WD

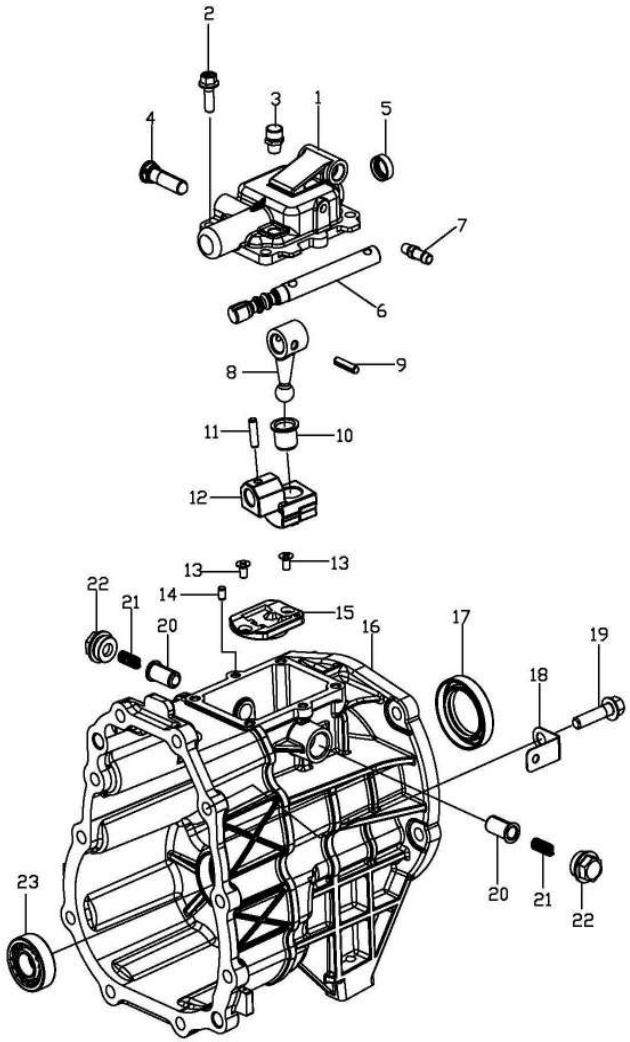

KEY NO.		PART NAME										
			ENGINE							APPLICATION		
ITC	PART NO.	T/M	G23D	G32D			OPTION	L/R	Q'TY	FROM	TO	REMARK
	[01] PB07C-2003	M	COVER-TOP,4WD S						1			
	[02] PB07C-0009	M	BOLT-FLANGE S						4			
	[03] PA07C-0020	M	AIR-BREATHER S						1			
	[04] PB07C-0087	M	PIN-DETENT S						1			
	[05] PB07C-0090	M	SEAL-OIL,CONTROL S						1			
	[06] PB07C-0150	M	SHAFT-SHIFT,R200 S						1			
	[07] PB07C-2004	M	VENT-AIR S						1			
	[08] PB07C-0093	M	LEVER-SHIFT S						1			
	[09] PB07C-0094	M	PIN-SPRING S						1			

3146

SHIFT & EXTENSION - 4WD

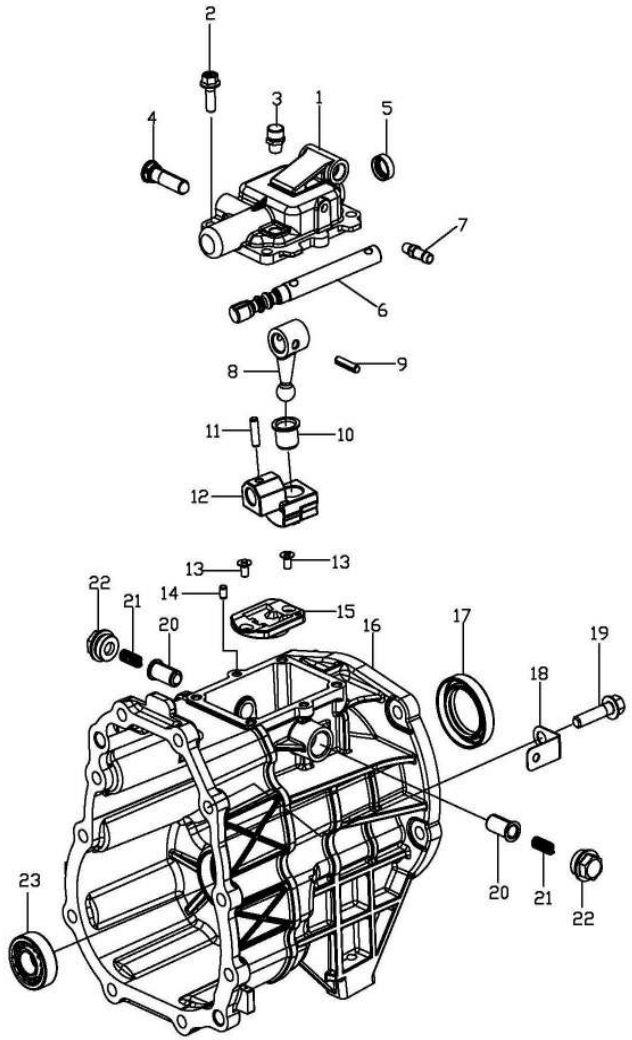

KEY NO.		PART NAME										
ITC	PART NO.	T/M	ENGINE G23D	ENGINE G32D	ENGINE	ENGINE	OPTION	L/R	Q'TY	APPLICATION FROM	APPLICATION TO	REMARK
	[10] PB07C-0092	M	BUSH-OFFSET LEVER S						1			
	[11] PB07C-0094	M	PIN-SPRING S						1			
	[12] PB07C-0091	M	LEVER-OFFSET S						1			
	[13] PB07C-0102	M	SCREW-COUNTER SUNK S						2			
	[14] PB07C-0007	M	PIN-DOWEL S						2			
	[15] PB07C-0101	M	PLATE-OFFSET S						1			
	[16] PB07C-2001	M	HOUSING-EXTENSION,4WD S						1			
	[17] PB07C-0103	M	SEAL-OIL,OUTPUT S						1			
	[18] PB07C-0148	M	BRACKET-BACK LAMP SWITCH S						1			

3146

SHIFT & EXTENSION - 4WD

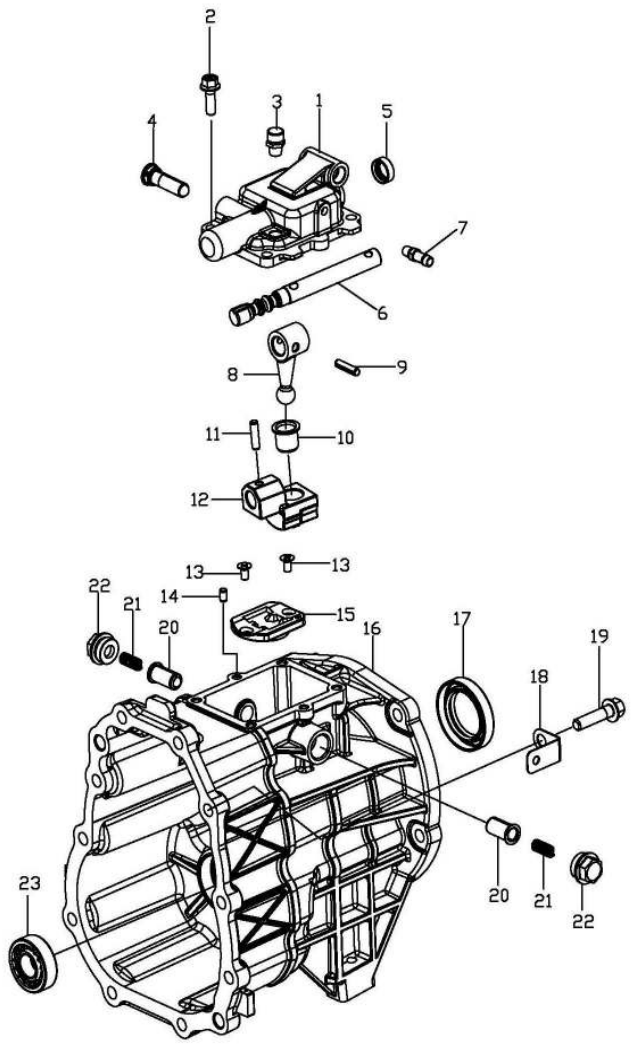

KEY NO.		PART NAME										
			ENGINE							APPLICATION		
ITC	PART NO.	T/M	G23D	G32D			OPTION	L/R	Q'TY	FROM	TO	REMARK
	[19] PB07C-0009	M	BOLT-FLANGE S						10			
	[20] PB07C-0095	M	PLUNGER-ROLLING S						2			
	[21] PB07C-0096	M	SPRING S						2			
	[22] PB07C-0097	M	PLUG S						2			
	[23] PB07C-0061	M	BEARING-ROLLER,C/S S						1			

3160

MANUAL TRANSMISSION - 2WD

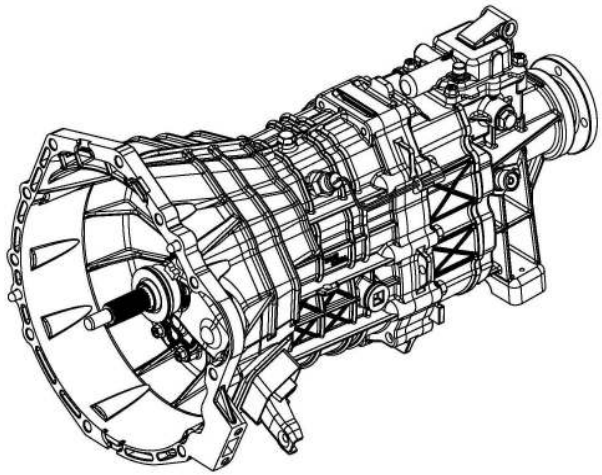

KEY NO.		PART NAME										
			ENGINE							APPLICATION		
ITC	PART NO.	T/M	G23D	G32D			OPTION	L/R	Q'TY	FROM	TO	REMARK
	PB07C-1200		TRANSMISSION ASS`Y									
		M	S						1			6T

3161

CLUTCH HOUSING - 2WD

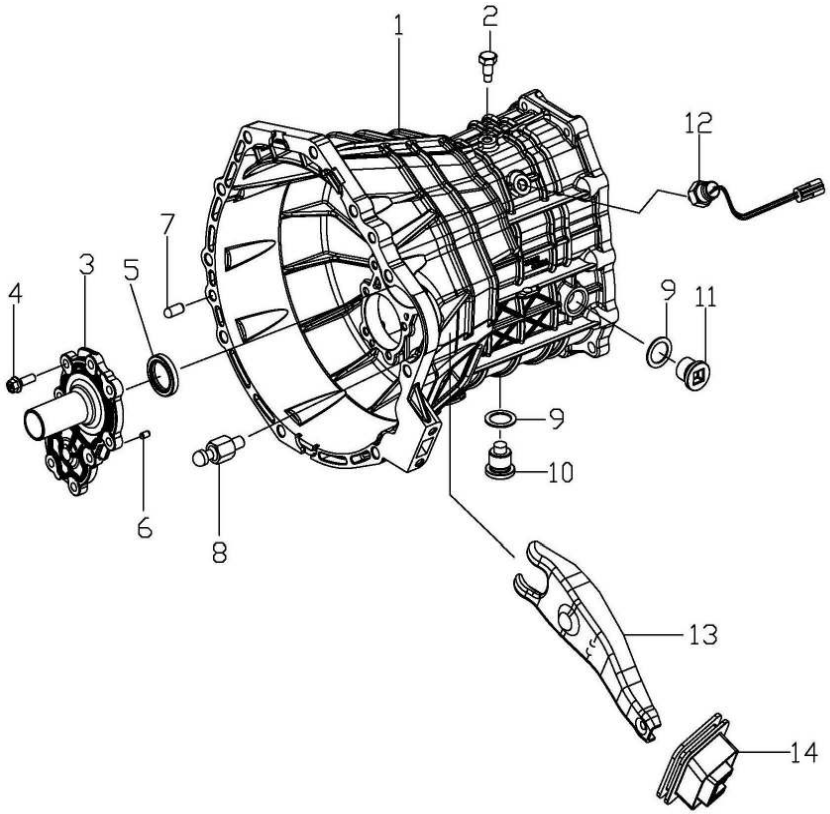

KEY NO.		PART NAME										
ITC	PART NO.	T/M	ENGINE G23D	ENGINE G32D	ENGINE	ENGINE	OPTION	L/R	Q'TY	APPLICATION FROM	APPLICATION TO	REMARK
	[01] PB07C-0002	M	HOUSING-TM S						1			
	[02] PB07C-0086	M	BOLT-INTER LOCK S						1			
	[03] PB07C-0008	M	COVER-FRONT S						1			
	[04] PB07C-0009	M	BOLT-FLANGE S						9			
	[05] PB07C-0010	M	SEAL-OIL,INPUT S						1			
	[06] PB07C-0007	M	PIN-DOWEL S						2			
	[07] PB07C-0149	M	PIN-PARALLER S						2			
	[08] PB07C-0112	M	PIN-PIVOT S						1			
	[09] PB07C-0006	M	GASKET-OIL PLUG S						2			

3161

CLUTCH HOUSING - 2WD

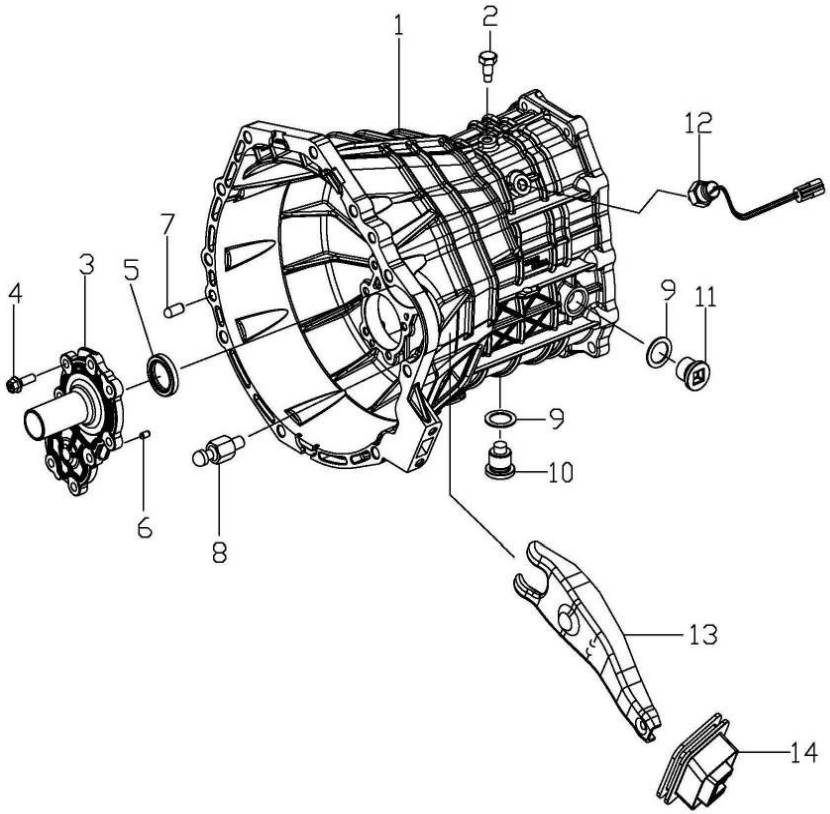

KEY NO.		PART NAME										
			ENGINE							APPLICATION		
ITC	PART NO.	T/M	G23D	G32D			OPTION	L/R	Q'TY	FROM	TO	REMARK
	[10] PA07C-0021	M	PLUG-ASS`Y, DRAIN S						1			
	[11] PA07C-0011	M	PLUG-OIL FILLER S						1			
	[12] PB07C-0106	M	SWITCH ASSY-BACK LAMP S						1			
	[13] PB07C-0113	M	FORK ASSY-CLUTCH RELEASE S						1			
	[14] PB07C-0117	M	BOOT-CLUTCH RELEASE FORK S						1			

3162

OUTPUT & INPUT SHAFT - 2WD

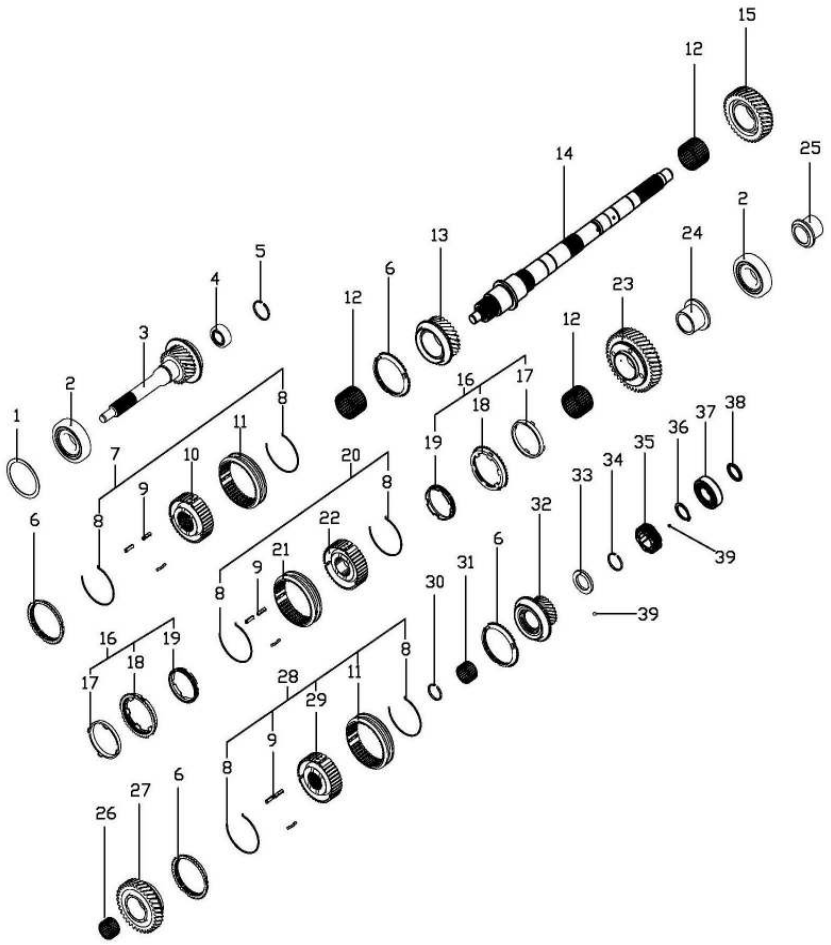

KEY NO.		PART NAME										
			ENGINE							APPLICATION		
ITC	PART NO.	T/M	G23D	G32D			OPTION	L/R	Q'TY	FROM	TO	REMARK
	[01]		SHIM-INPUT									
	PB07C-0011-001	M	S						1			T=0.55
	PB07C-0011-002	M	S						1			T=0.60
	PB07C-0011-003	M	S						1			T=0.65
	PB07C-0011-004	M	S						1			T=0.70
	PB07C-0011-005	M	S						1			T=0.75
	PB07C-0011-006	M	S						1			T=0.80
	PB07C-0011-007	M	S						1			T=0.85
	PB07C-0011-008	M	S						1			T=0.90
	PB07C-0011-009	M	S						1			T=0.95
	PB07C-0011-010	M	S						1			T=1.00
	PB07C-0011-011	M	S						1			T=1.05
	PB07C-0011-012	M	S						1			T=1.10
	PB07C-0011-013	M	S						1			T=1.15
	PB07C-0011-014	M	S						1			T=1.20
	[02]		BEARING-TAPER ROLLER,MAIN									
	PB07C-0012	M	S						2			
	[03]		SHAFT ASS`Y-INPUT, SMF									
	PB07C-0014	M	S						1			
	[04]		BEARING-TAPER ROLLER,PILOT									
	PB07C-0013	M	S						1			
	[05]		RING-RETAINER,3RD&4TH HUB									
	PB07C-0037-001	M	S						1			T=2.80
	PB07C-0037-002	M	S						1			T=2.85
	PB07C-0037-003	M	S						1			T=2.90

3162

OUTPUT & INPUT SHAFT - 2WD

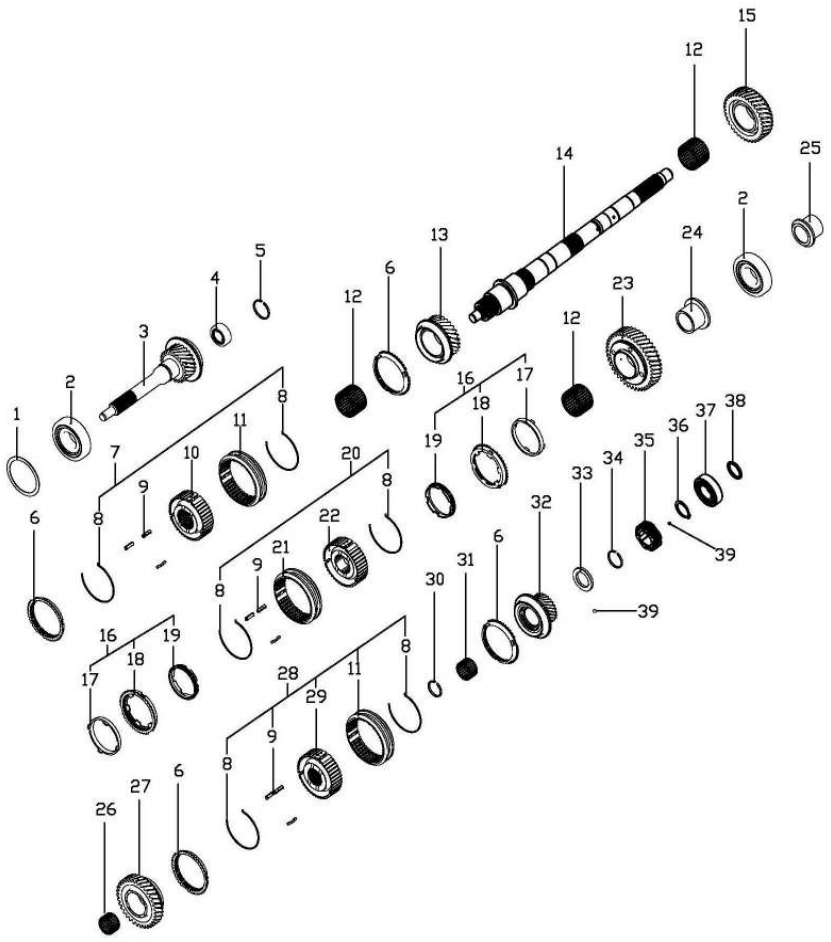

KEY NO.		PART NAME										
			ENGINE							APPLICATION		
ITC	PART NO.	T/M	G23D	G32D			OPTION	L/R	Q'TY	FROM	TO	REMARK
	[06] PB07C-0100	M	RING-SYNCHRO S						4			
	[07] PB07C-0135	M	HUB-SYN ASSY,1&2 S						1			
	[08] PB07C-0028	M	SPRING-SYNCHRO S						6			
	[09] PB07C-0029	M	KEY-SYNCHRO S						9			
	[10] PB07C-0027	M	HUB-SYNCHRO,1ST&2ND S						1			
	[11] PB07C-0036	M	SLEEVE-SYNCHRO,SINGLE S						2			
	[12] PB07C-0021	M	BEARING-NEEDLE1ST&2ND&3RD S						3			
	[13] PB07C-0033	M	GEAR ASS`Y-3RD S						1			
	[14] PB07C-0017	M	SHAFT-MAIN,2WD S						1			

3162

OUTPUT & INPUT SHAFT - 2WD

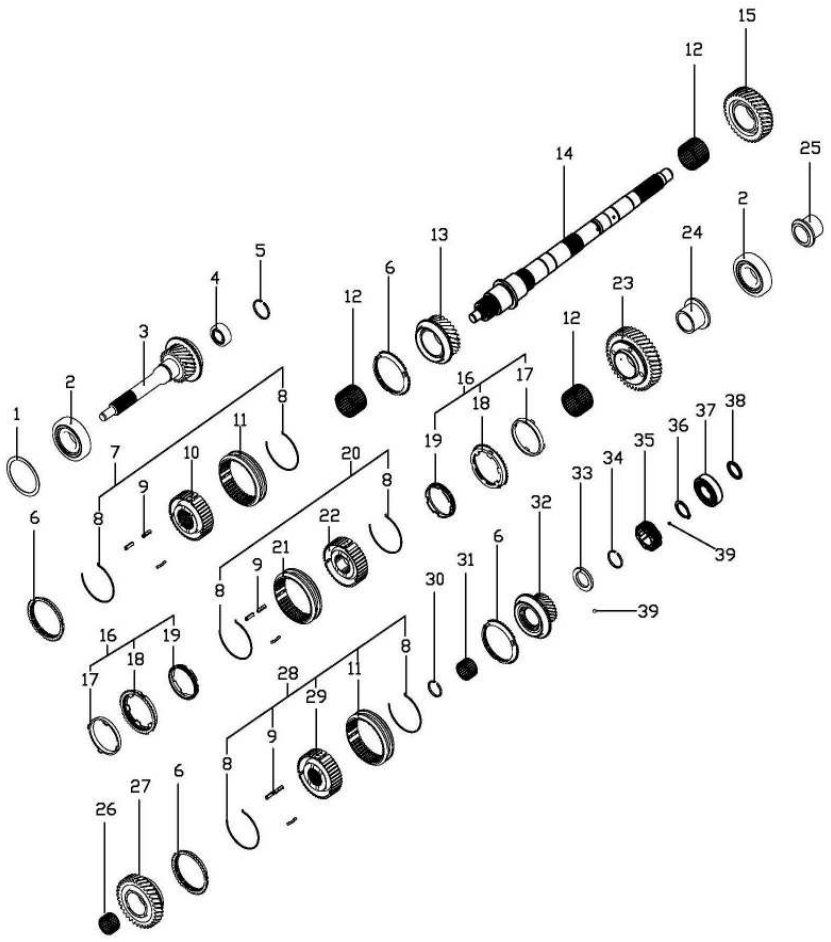

KEY NO.		PART NAME										
			ENGINE							APPLICATION		
ITC	PART NO.	T/M	G23D	G32D			OPTION	L/R	Q'TY	FROM	TO	REMARK
	[15] PB07C-0031	M	GEAR ASS`Y-2ND S						1			
	[16] PB07C-0023	M	SYNCHRO RING ASS`Y-DOUBLE S						2			
	[17] PB07C-0025	M	MIDDLE RING-SYNCHRO S						2			
	[18] PB07C-0026	M	OUTER RING-SYNCHRO S						2			
	[19] PB07C-0024	M	INNER RING-SYNCHRO S						2			
	[20] PB07C-0136	M	HUB-SYN ASSY,3&4 S						1			
	[21] PB07C-0030	M	SLEEVE-SYNCHRO,DOUBLE S						1			
	[22] PB07C-0035	M	HUB-SYNCHRO,3RD&4TH S						1			
	[23] PB07C-0038	M	GEAR ASSY-REV. S						1			

3162

OUTPUT & INPUT SHAFT - 2WD

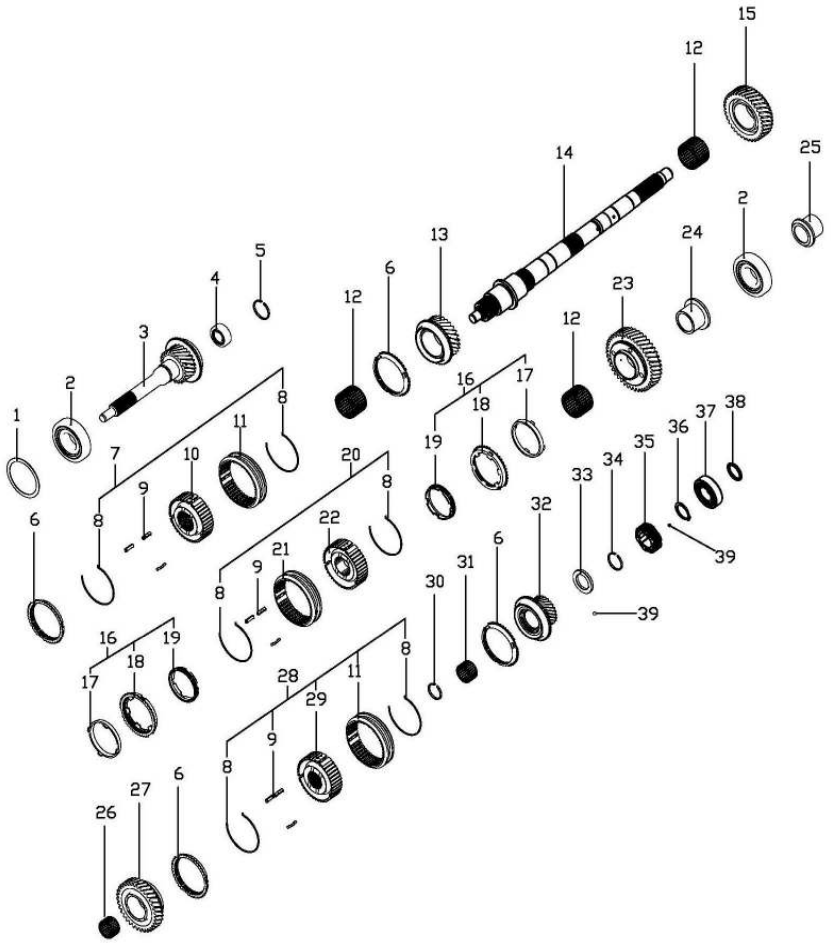

KEY NO.		PART NAME										
			ENGINE							APPLICATION		
ITC	PART NO.	T/M	G23D	G32D			OPTION	L/R	Q'TY	FROM	TO	REMARK
	[24] PB07C-0022	M	SLEEVE-BRG,1ST. S						1			
	[25] PB07C-0041	M	SLEEVE-BRG,REV. S						1			
	[26] PB07C-0040	M	BEARING-NEEDLE,REV. S						1			
	[27] PB07C-0044	M	GEAR ASSY-5TH S						1			
	[28] PB07C-0137	M	HUB-SYNCHRO,5TH&REV. S						1			
	[29] PB07C-0042	M	HUB-5TH&REV. S						1			
	[30] PB07C-0043	M	RING-RETAINER S						1			
	[31] PB07C-0047	M	BEARING-NEEDLE,5TH S						1			
	[32] PB07C-0044	M	GEAR ASSY-5TH S						1			
	[33] PB07C-0048	M	WASHER-THRUST,5TH S						1			

3162

OUTPUT & INPUT SHAFT - 2WD

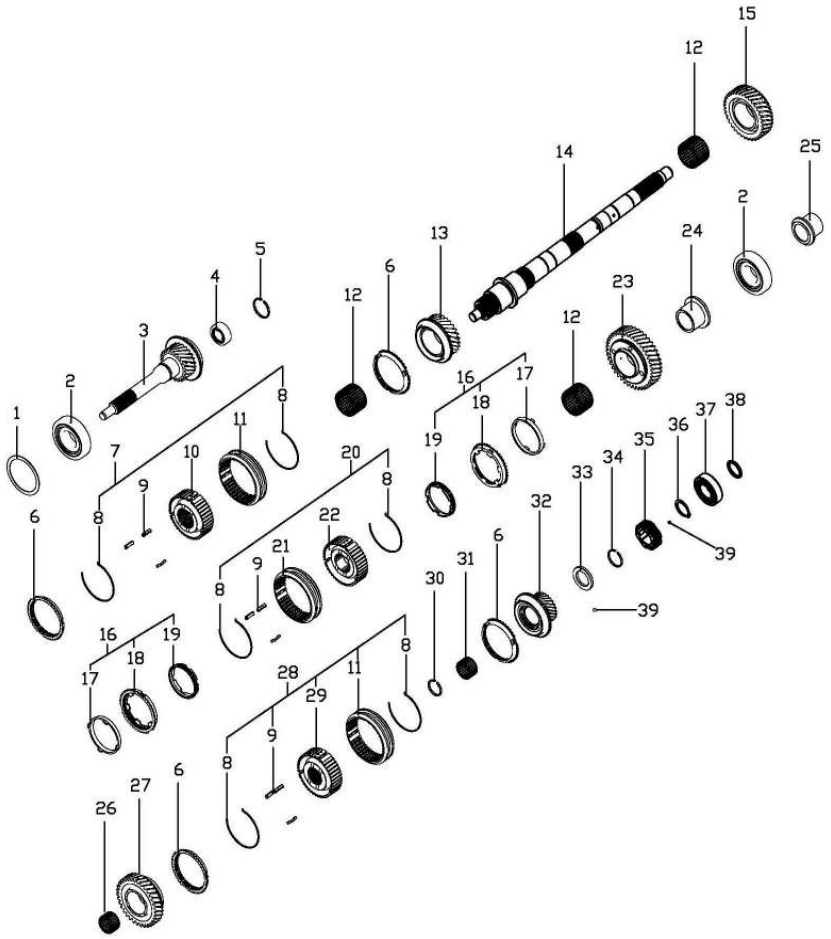

KEY NO.		PART NAME										
			ENGINE							APPLICATION		
ITC	PART NO.	T/M	G23D	G32D			OPTION	L/R	Q'TY	FROM	TO	REMARK
	[34]		RING-RETAINER,5TH&IDLER SHAFT									
	PB07C-0050-001	M	S						1			T=2.80
	PB07C-0050-002	M	S						1			T=2.85
	PB07C-0050-003	M	S						1			T=2.90
	PB07C-0050-004	M	S						1			T=2.95
	PB07C-0050-005	M	S						1			T=3.00
	PB07C-0050-006	M	S						1			T=3.05
	PB07C-0050-007	M	S						1			T=3.10
	PB07C-0050-008	M	S						1			T=3.15
	[35]		GEAR-DRIVE,SPEEDOMETER									
	PB07C-0133	M	S				BLACK		1			6T
	[36]		RING-SNAP,WORM									
	PB07C-0052	M	S						1			
	[37]		BEARING-BALL									
	PA07C-0006	M	S						1			
	[38]		WASHER-BALL,BRG									
	PB07C-0053	M	S						1			
	[39]		BALL-STEEL									
	H7201-05004	M	S						2			

3163

COUNT SHAFT GEAR - 2WD

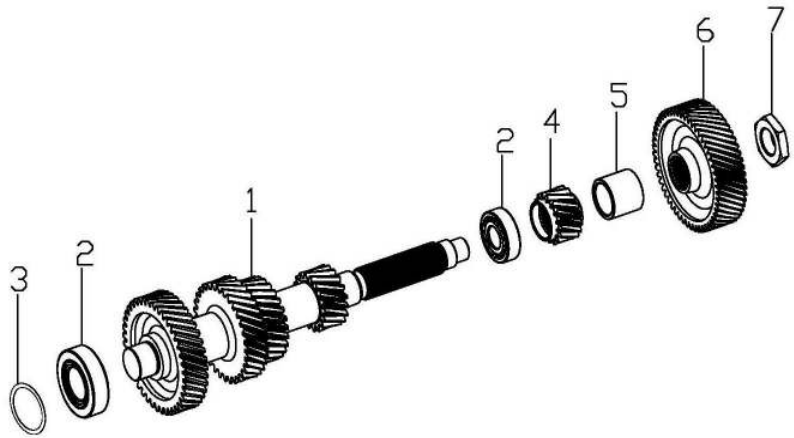

KEY NO.		PART NAME										
			ENGINE							APPLICATION		
ITC	PART NO.	T/M	G23D	G32D			OPTION	L/R	Q'TY	FROM	TO	REMARK
	[01]		SHAFT-COUNTER									
	PB07C-0057	M	S						1			
	[02]		BRG-TAPER ROLLER,C/S									
	PB07C-0055	M	S						2			
	[03]		SHIM-C/S									
	PB07C-0054-001	M	S						1			T=0.60
	PB07C-0054-002	M	S						1			T=0.70
	PB07C-0054-003	M	S						1			T=0.75
	PB07C-0054-004	M	S						1			T=0.85
	PB07C-0054-005	M	S						1			T=0.90
	PB07C-0054-006	M	S						1			T=0.95
	PB07C-0054-007	M	S						1			T=1.00
	PB07C-0054-008	M	S						1			T=1.05
	PB07C-0054-009	M	S						1			T=1.10
	PB07C-0054-010	M	S						1			T=1.15
	PB07C-0054-011	M	S						1			T=1.20
	PB07C-0054-012	M	S						1			T=1.25
	[05]		GEAR REV-C/S									
	PB07C-0058	M	S						1			
	[06]		SPACER-C/S									
	PB07C-0060	M	S						1			
	[07]		GEAR 5TH, C/S									
	PB07C-0059	M	S						1			

3163

COUNT SHAFT GEAR - 2WD

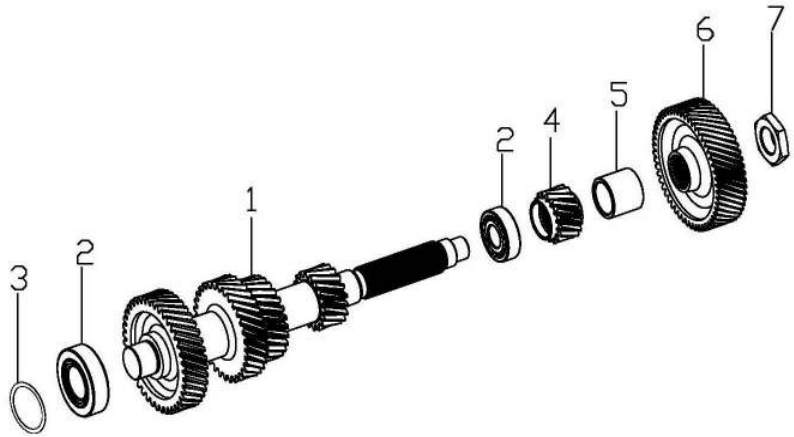

KEY NO.		PART NAME										
			ENGINE						APPLICATION			
ITC	PART NO.	T/M	G23D	G32D			OPTION	L/R	Q'TY	FROM	TO	REMARK
	[08] PB07C-0056	M	NUT-LOCK, C/S S						1			

3164

ADAPTOR - 2WD

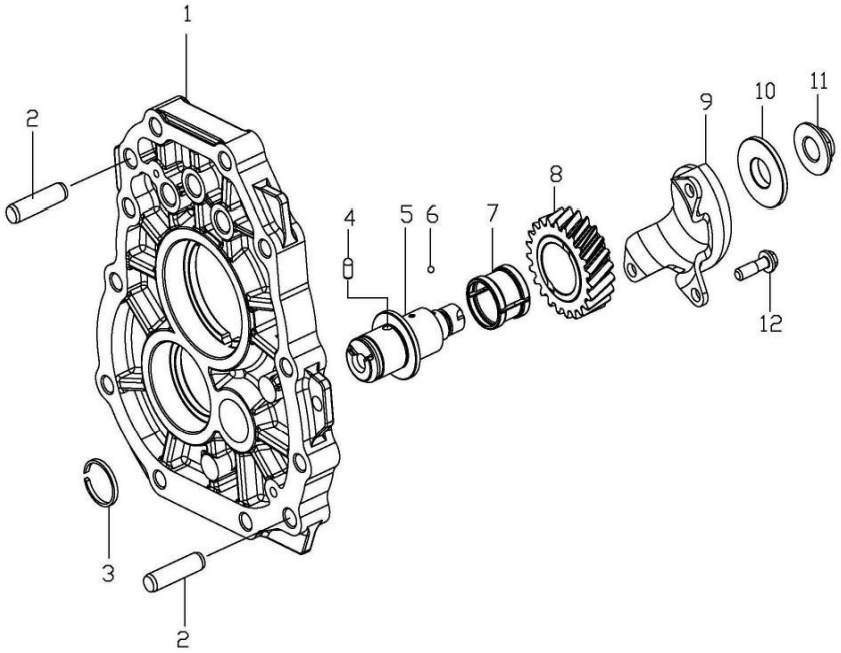

KEY NO.		PART NAME										
			ENGINE							APPLICATION		
ITC	PART NO.	T/M	G23D	G32D			OPTION	L/R	Q'TY	FROM	TO	REMARK
	[01]		ADAPTOR-T/M									
	PB07C-0003	M	S						1			
	[02]		PIN-DOWEL,ADAPTOR									
	PB07C-0005	M	S						2			
	[03]		RING-RETAINER,5TH&IDLER SHAFT									
	PB07C-0050-001	M	S						1			T=2.80
	PB07C-0050-002	M	S						1			T=2.85
	PB07C-0050-003	M	S						1			T=2.90
	PB07C-0050-004	M	S						1			T=2.95
	PB07C-0050-005	M	S						1			T=3.00
	PB07C-0050-006	M	S						1			T=3.05
	PB07C-0050-007	M	S						1			T=3.10
	PB07C-0050-008	M	S						1			T=3.15
	[04]		PIN-DOWEL									
	PB07C-0007	M	S						1			
	[05]		SHAFT-REVERSE IDLER									
	PB07C-0064	M	S						1			
	[06]		BALL-STEEL									
	H7201-05004	M	S						1			
	[07]		BEARING-NEEDLE,IDLER									
	PB07C-0063	M	S						1			

3164

ADAPTOR - 2WD

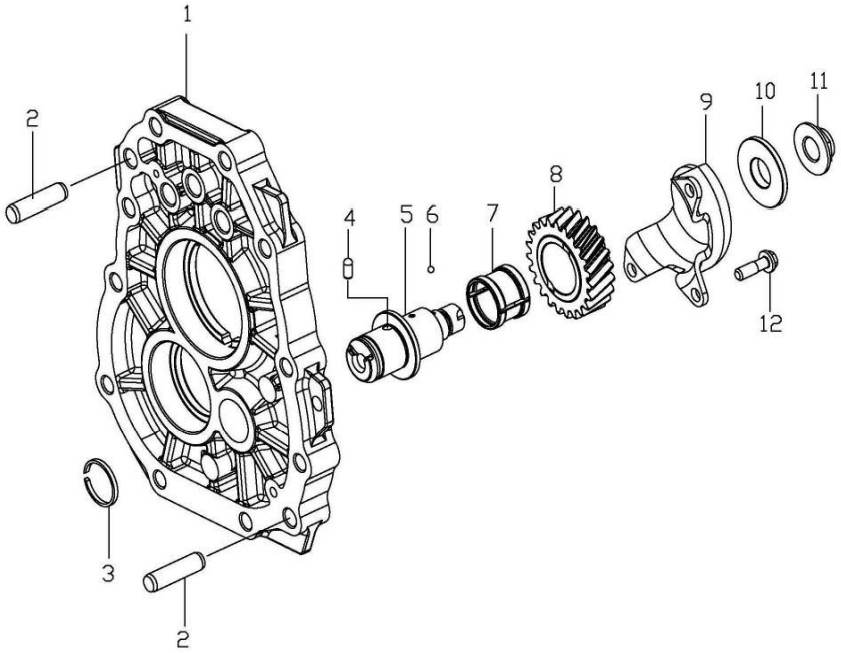

KEY NO.		PART NAME										
			ENGINE							APPLICATION		
ITC	PART NO.	T/M	G23D	G32D			OPTION	L/R	Q'TY	FROM	TO	REMARK
	[08] PB07C-0062	M	GEAR-REV.IDLER S						1			
	[09] PB07C-0068	M	BRK`T-IDLER S						1			
	[10] PB07C-0065	M	SPACER-REVERSE IDLER S						1			
	[11] PB07C-0066	M	NUT-LOCK S						1			
	[12] PB07C-0067	M	BOLT-HEX.SEMS S						3			

3165

RAIL & SHIFT FORK - 2WD

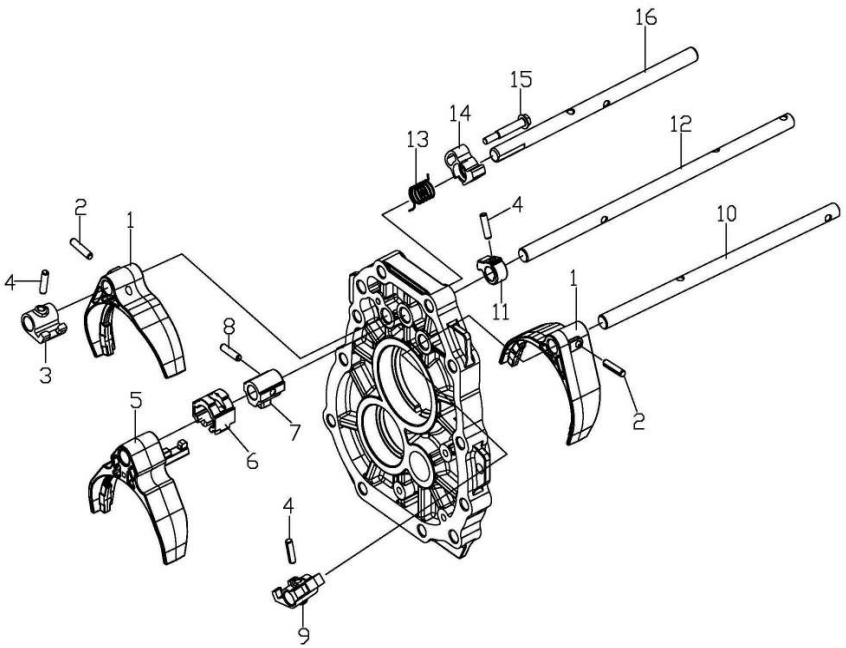

KEY NO.		PART NAME										
			ENGINE							APPLICATION		
ITC	PART NO.	T/M	G23D	G32D			OPTION	L/R	Q'TY	FROM	TO	REMARK
	[01] PB07C-0073	M	FORK-SHIFT,1&2,5&R S						2			
	[02] PB07C-0074	M	PIN-SPRING,FORK,SHIFT S						2			
	[03] PB07C-0070	M	LUG-SHIFT,1&2 S						1			
	[04] PB07C-0072	M	PIN-SPRING S						3			
	[05] PB07C-0098	M	FORK&BUSH ASSY-SHIFT,3&4 S						1			
	[06] PB07C-0080	M	PLATE-INTER LOCK S						1			
	[07] PB07C-0079	M	LEVER-SHIFT,INNER S						1			
	[08] PB07C-0094	M	PIN-SPRING S						1			
	[09] PB07C-0071	M	LUG-SHIFT,5&R S						1			

3165

RAIL & SHIFT FORK - 2WD

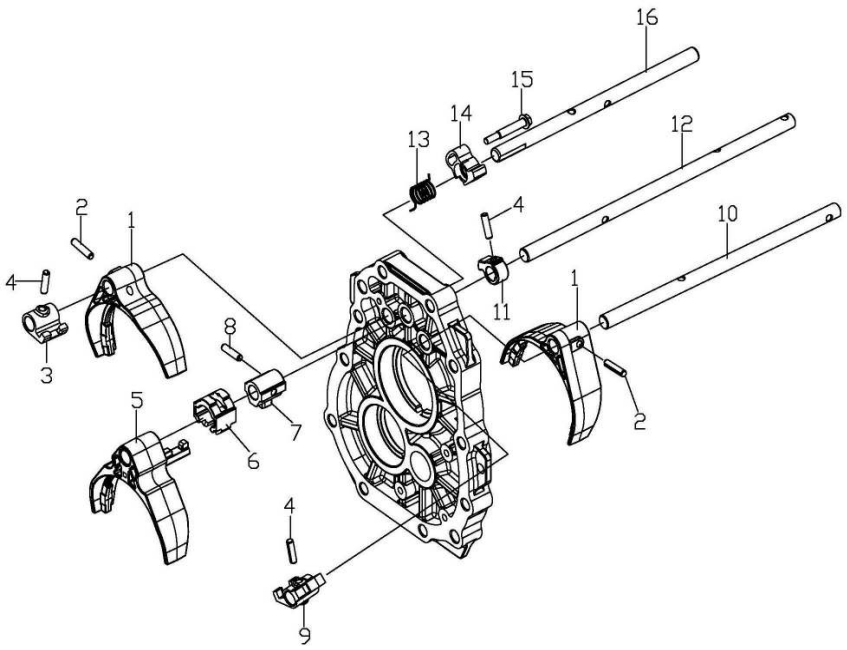

KEY NO.		PART NAME										
			ENGINE							APPLICATION		
ITC	PART NO.	T/M	G23D	G32D			OPTION	L/R	Q'TY	FROM	TO	REMARK
	[10] PB07C-0081	M	RAIL-SHIFT,5&R S						1			
	[11] PB07C-0084	M	PLATE-STOPPER S						1			
	[12] PB07C-0075	M	RAIL-SHIFT,3&4 S						1			
	[13] PB07C-0082	M	SPRING-REVERSE LOCK S						1			
	[14] PB07C-0083	M	PLATE-REVERSE LOCK S						1			
	[15] PB07C-0085	M	BOLT-REVERSE LOCK S						1			
	[16] PB07C-0069	M	RAIL-SHIFT,1&2 S						1			

3166

SHIFT & EXTENSION - 2WD

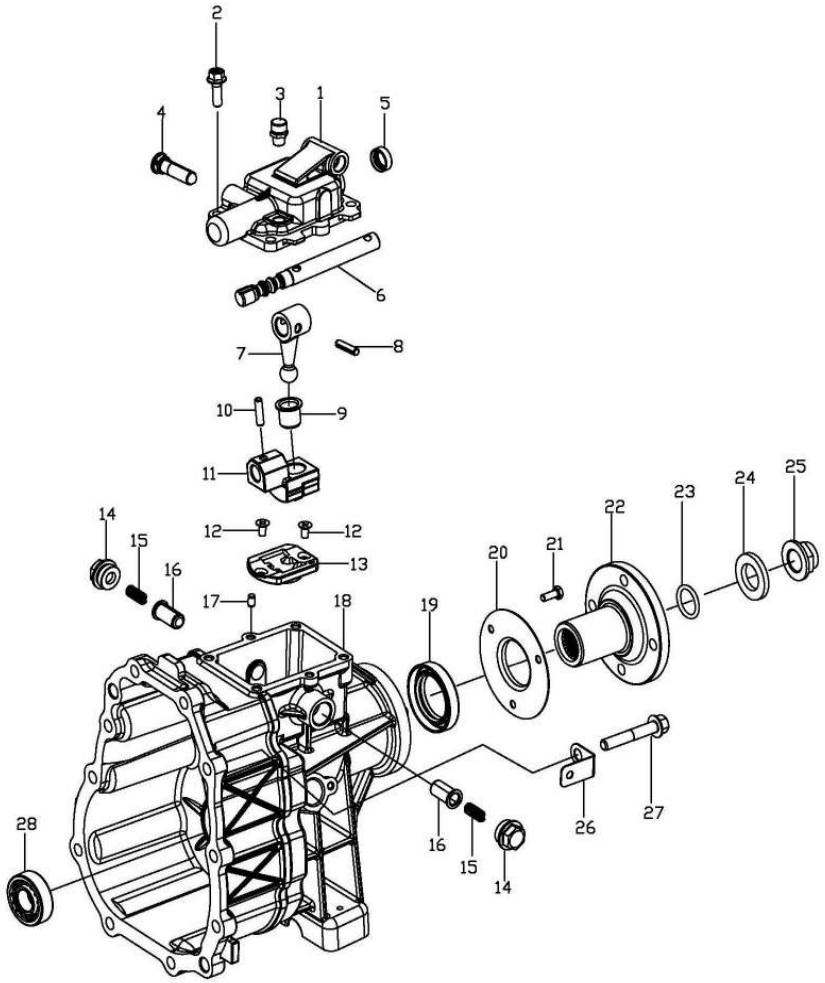

KEY NO.		PART NAME										
			ENGINE						APPLICATION		
ITC	PART NO.	T/M	G23D	G32D			OPTION	L/R	Q'TY	FROM	TO	REMARK
	[01] PB07C-0088	M	COVER-TOP,2WD S						1			
	[02] PB07C-0009	M	BOLT-FLANGE S						4			
	[03] PA07C-0020	M	AIR-BREATHER S						1			
	[04] PB07C-0087	M	PIN-DETENT S						1			
	[05] PB07C-0090	M	SEAL-OIL,CONTROL S						1			
	[06] PB07C-0150	M	SHAFT-SHIFT,R200 S						1			
	[07] PB07C-0093	M	LEVER-SHIFT S						1			
	[08] PB07C-0094	M	PIN-SPRING S						1			
	[09] PB07C-0092	M	BUSH-OFFSET LEVER S						1			

3166

SHIFT & EXTENSION - 2WD

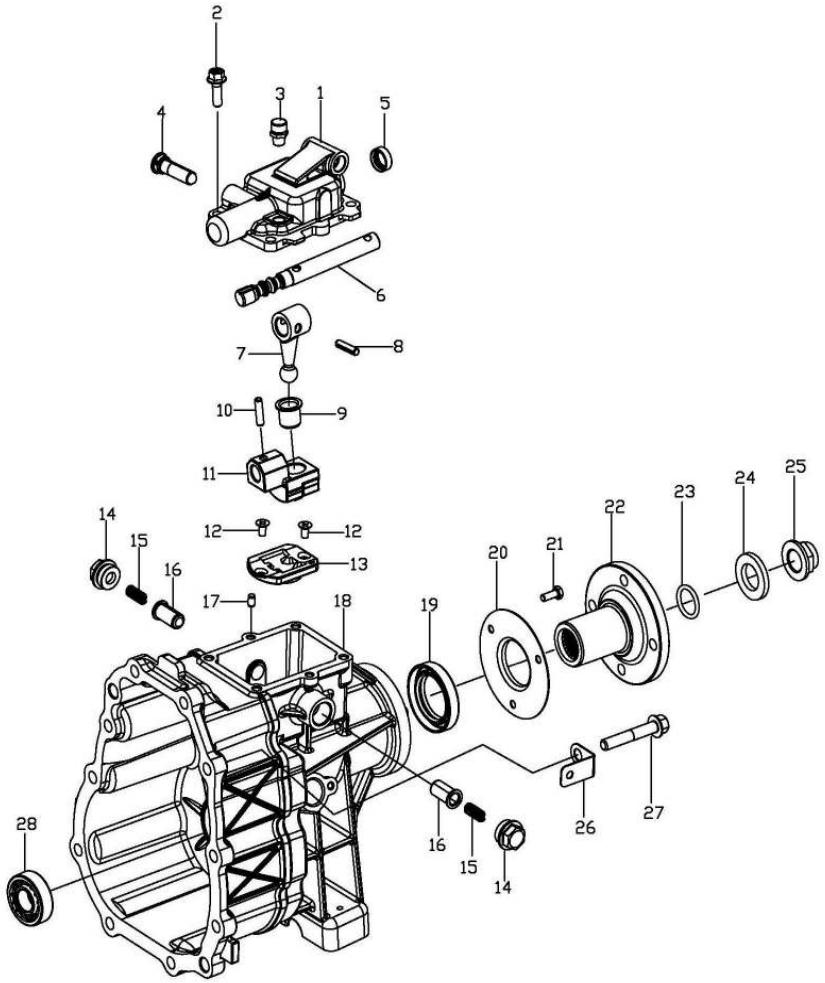

KEY NO.		PART NAME										
			ENGINE							APPLICATION		
ITC	PART NO.	T/M	G23D	G32D			OPTION	L/R	Q'TY	FROM	TO	REMARK
	[10] PB07C-0094	M	PIN-SPRING S						1			
	[11] PB07C-0091	M	LEVER-OFFSET S						1			
	[12] PB07C-0102	M	SCREW-COUNTER SUNK S						1			
	[13] PB07C-0101	M	PLATE-OFFSET S						1			
	[14] PB07C-0097	M	PLUG S						2			
	[15] PB07C-0096	M	SPRING S						2			
	[16] PB07C-0095	M	PLUNGER-ROLLING S						2			
	[17] PB07C-0007	M	PIN-DOWEL S						2			
	[18] PB07C-0004	M	HOUSING-EXTENSION,2WD S						1			

3166

SHIFT & EXTENSION - 2WD

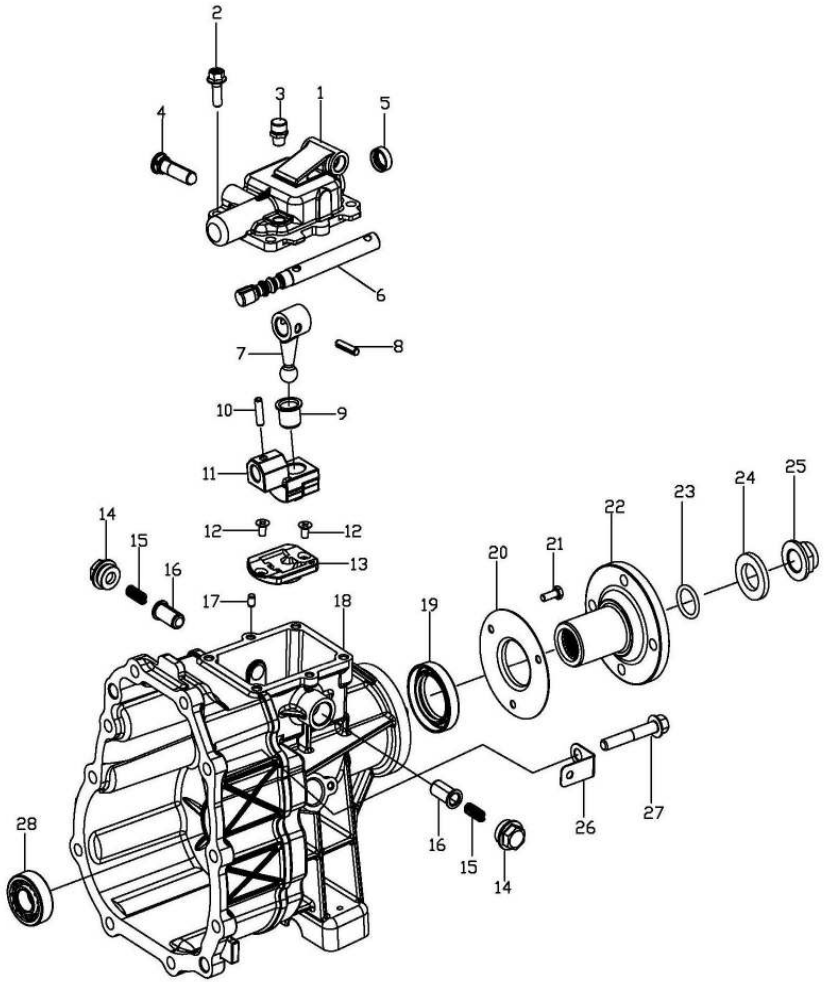

KEY NO.		PART NAME										
			ENGINE							APPLICATION		
ITC	PART NO.	T/M	G23D	G32D			OPTION	L/R	Q'TY	FROM	TO	REMARK
	[19] PB07C-0103	M	SEAL-OIL,OUTPUT S						1			
	[20] PB07C-0105	M	COVER-DUST S						1			
	[21] H0106-06129	M	BOLT-FLANGE S						3			
	[22] PB07C-0105	M	FLANGE-COMP S						1			
	[23] PB07C-0108	M	RING-O S						1			
	[24] PB07C-0109	M	WASHER S						1			
	[25] PB07C-0110	M	NUT-LOCK S						1			
	[26] PB07C-0106	M	BRACKET-BACK LAMP SWITCH S						1			
	[27] PBO7C-0104	M	BOLT-FLANGE S						10			
	[28] PB07C-0061	M	BEARING-ROLLER,C/S S						1			

3176

SHIFTER & LEVER

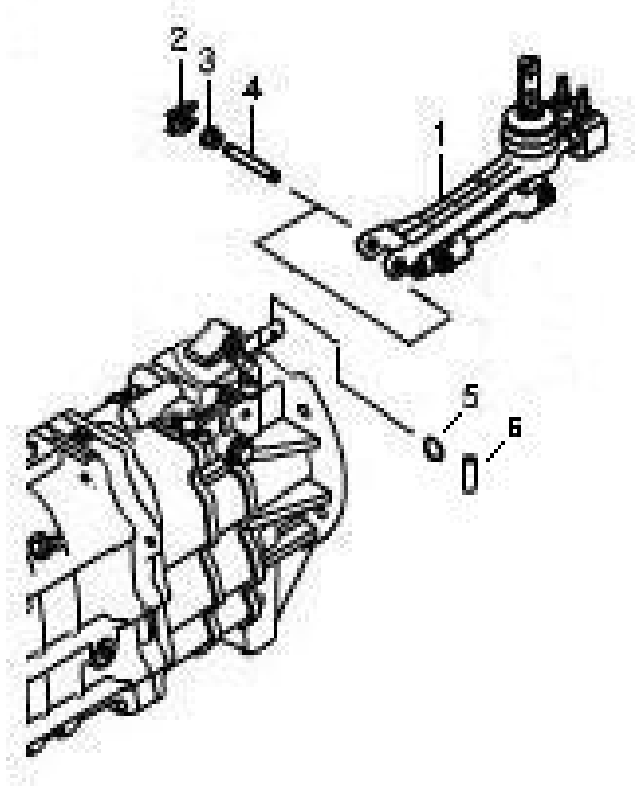

KEY NO.		PART NAME										
			ENGINE							APPLICATION		
ITC	PART NO.	T/M	G23D	G32D			OPTION	L/R	Q'TY	FROM	TO	REMARK
	[01] 31830 08000	M	LEVER A-SEMI REMOTE S				&PM0.		1			
	[02] 31833 08000	M	WASHER-LOCK S				&PM0.		2			
	[03] 31831 08000	M	BUSH-T.G.S S				&PM0.		2			
	[04] 31832 08000	M	PIN S				&PM0.		1			
	[05] 31835 08000	M	RING-RETURN S				&PM0.		1			
	[06] 31834 08000	M	PIN-JOINT S				&PM0.		1			

3210

TRANSFER CASE-PART TIME

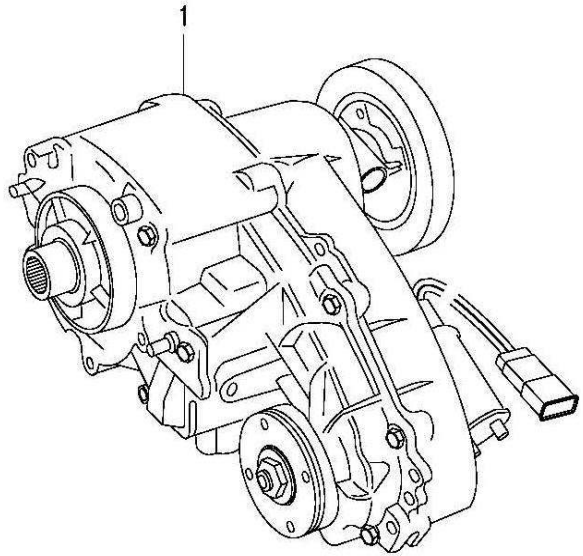

KEY NO.		PART NAME										
			ENGINE							APPLICATION		
ITC	PART NO.	T/M	G23D	G32D			OPTION	L/R	Q'TY	FROM	TO	REMARK
	[01]		CASE ASSY-TRANSPER									
	PE07E-0100			S			4408-000-007-A		1			5T
	PE07E-0200		S				4408-000-008-A		1			6T

3211

TRANSFER CASE-PART TIME

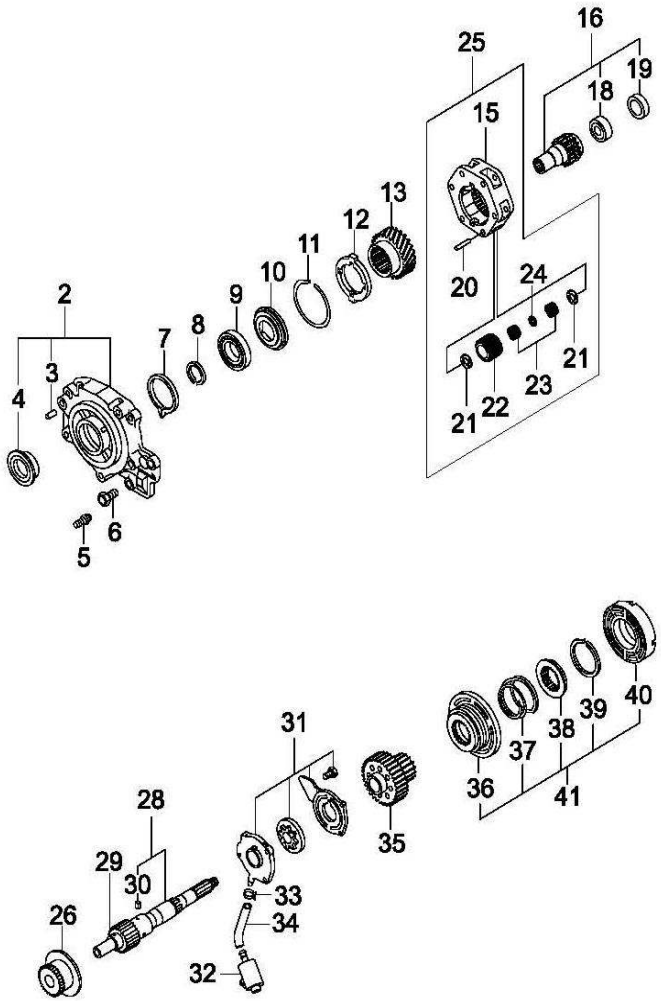

KEY NO.		PART NAME										
			ENGINE						APPLICATION		
ITC	PART NO.	T/M	G23D	G32D			OPTION	L/R	Q'TY	FROM	TO	REMARK
	[02] 1354.672.001		ADAPTOR ASSY-FRT S	S					1			
	[03] 1000.043.017		PIN-SPIROL S	S					1			
	[04] 1300.044.001		SEAL-OIL S	S					1			
	[05] 1900.072.005		BREATHER S	S					1			
	[06] 1900.183.010		BOLT S	S					9			
	[07] 1000.139.039		RING-SNAP S	S					1			
	[08] 1000.139.040		RING-SNAP S	S					1			
	[09] 1000.130.011		BEARING S	S					1			
	[10] 1350.193.001		WASHER S	S					1			

3211

TRANSFER CASE-PART TIME

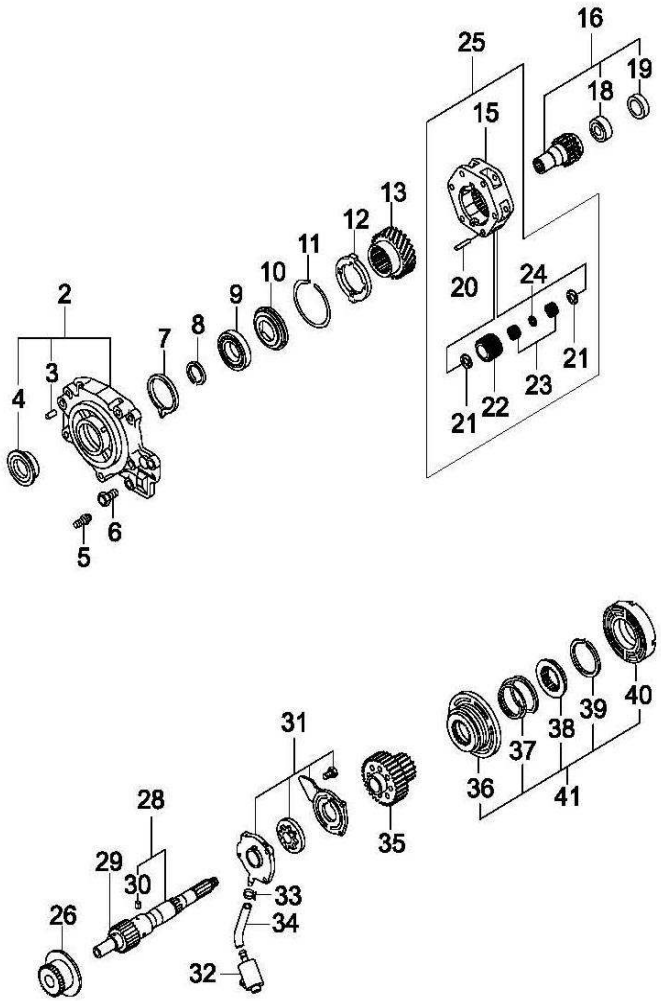

KEY NO. ITC	PART NO.	T/M	ENGINE G23D	ENGINE G32D			OPTION	L/R	Q'TY	APPLICATION FROM	APPLICATION TO	REMARK
	[11] 1000.139.043		RING-RETAINING S	S					1			
	[12] 1350.014.001		PLATE-THRUST S	S					1			
	[13] 1350.165.001		GEAR-SUN S	S					1			
	[15] 1354.659.001		CARRIER ASSY S	S					1			
	[16] 1354.689.001		SHAFT ASSY-INPUT S	S					1			
	[18] 4840G		BEARING S	S					1			
	[19] 1345.127.002		BEARING-SLEEVE S	S					1			
	[20] 1350.042.001		SHAFT-PINION S	S					6			
	[21] 1350.193.002		WASHER-PINION LOCK S	S					1			

3211

TRANSFER CASE-PART TIME

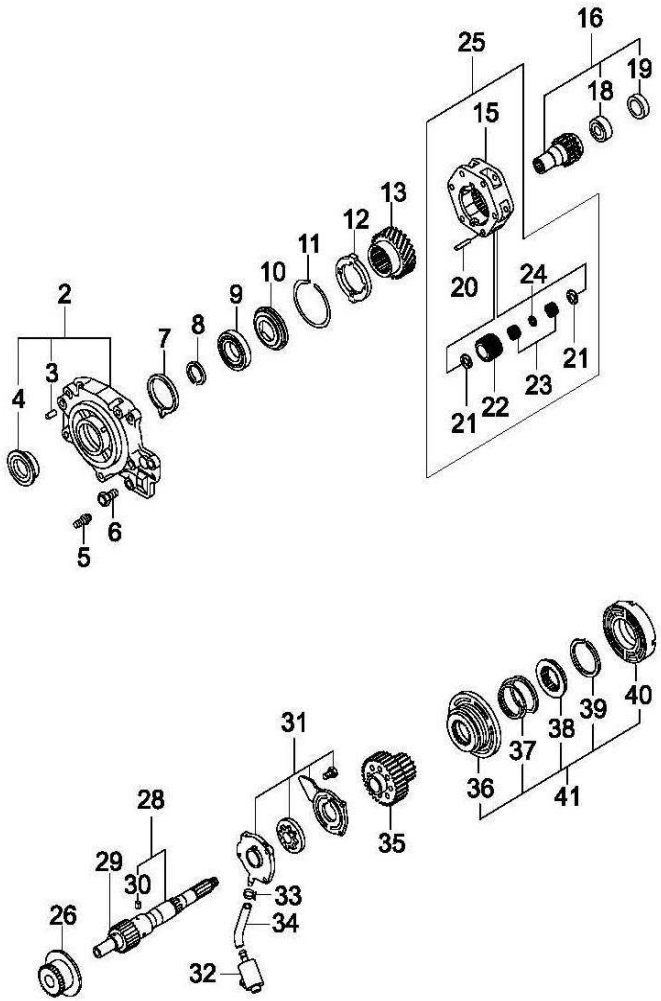

KEY NO. ITC	KEY NO. PART NO.	T/M	ENGINE G23D	ENGINE G32D	ENGINE	ENGINE	OPTION	L/R	Q'TY	APPLICATION FROM	APPLICATION TO	REMARK
	[22] 1350.163.001		GEAR-PINION S	S					1			
	[23] 1300.131.001		ROLLER-NEEDLE S	S					1			
	[24] 1350.053.001		SPACER-NEEDLE S	S					1			
	[25] 1354.659.002		SPACER-PINION S	S					1			
	[26] 1354.089.002		HUB-REDUCTION S	S					1			
	[28] 1354.671.010		SHAFT ASSY-OUTPUT S	S					1			
	[29] 1354.171.010		SHAFT-OUTPUT S	S					1			
	[30] 1900.043.004		PIN-SPRING S	S					1			
	[31] 4400.508.001		PUMP ASSY-GEROTOR S	S					1			

3211

TRANSFER CASE-PART TIME

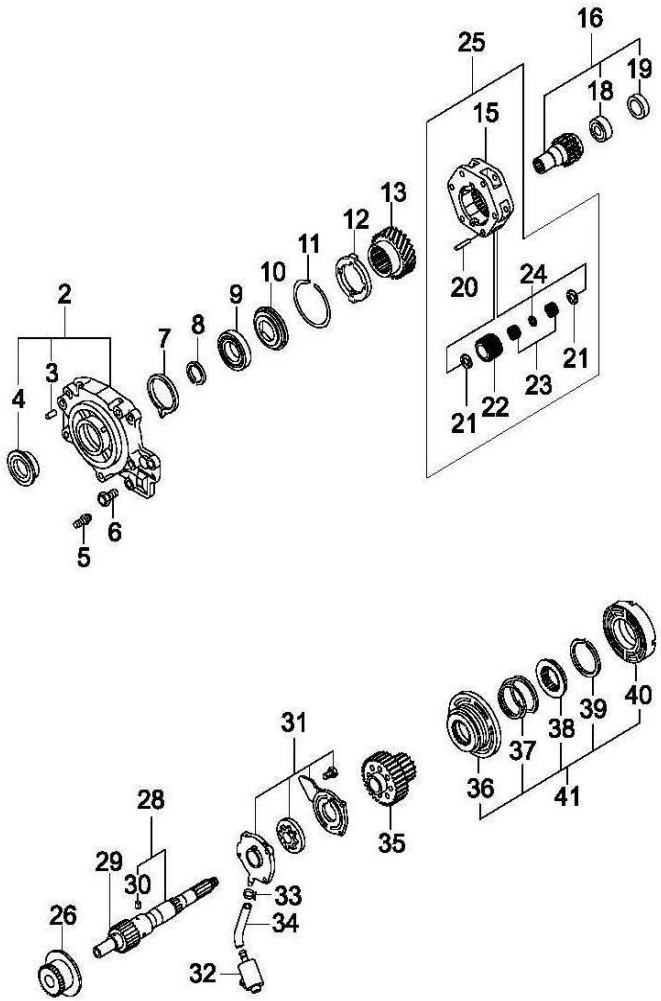

KEY NO.		PART NAME									
			ENGINE						APPLICATION		
ITC	PART NO.	T/M	G23D	G32D			OPTION	L/R	Q'TY	FROM	TO	REMARK
	[32] 1345.238.001		FILTER ASSY S	S					1			
	[33] 1345.056.005		CLAMP S	S					1			
	[34] 1350.034.002		HOSE-COUPLING S	S					1			
	[35] 1354.144.002		SPROCKET-DRIVE S	S					1			
	[36] 4400.055.001		COLLAR-LOCK UP S	S					1			
	[37] 1350.156.007		SPRING S	S					1			
	[38] 1900.089.001		HUB-LOCKUP S	S					1			
	[39] 1000.139.041		RING-SNAP S	S					1			
	[40] 1354.212.001		HOUSING-CLUTCH S	S					1			

3212

TRANSFER CASE-PART TIME

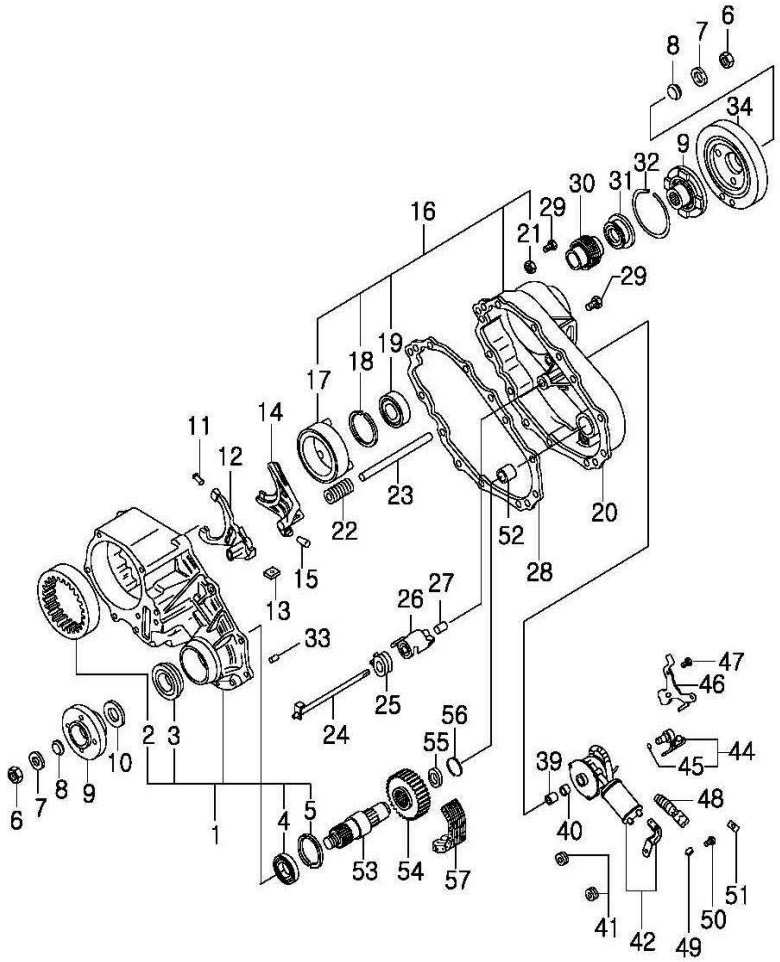

KEY NO.		PART NAME										
			ENGINE						APPLICATION		
ITC	PART NO.	T/M	G23D	G32D			OPTION	L/R	Q'TY	FROM	TO	REMARK
	[01] 1354.565.002		CASE ASSY-TRANSFER S	S					1			
	[02] 1350.162.001		GEAR-RING S	S					1			
	[03] 1900.044.009		SEAL-OIL S	S					1			
	[04] 1000.130.008		BEARING S	S					2			
	[05] 1900.139.063		RING-SNAP S	S					2			
	[06] 1900.149.014		NUT S	S					2			
	[07] 1900.047.007		WASHER S	S					2			
	[08] 1000.044.012		SEAL-OIL S	S					2			
	[09] 1300.031.006		FLANGE-COMPANION S	S					4			

3212

TRANSFER CASE-PART TIME

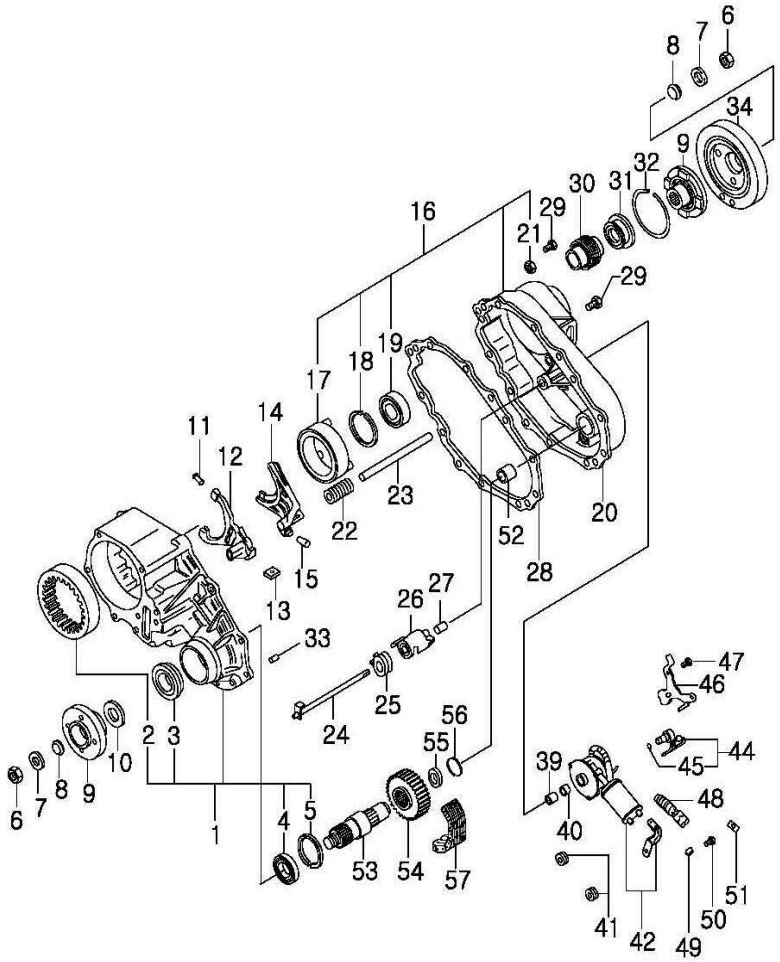

KEY NO.		PART NAME										
			ENGINE						APPLICATION		
I T C	PART NO.	T / M	G 2 3 D	G 3 2 D			OPTION	L / R	Q ' T Y	FROM	TO	REMARK
	[10] 1900.053.002		SPACER S	S					1			
	[11] 1356.235.001		FACING-SHIFT FORK S	S					1			
	[12] 1354.596.001		FORK ASSY-REDUCTION SHIFT S	S					1			
	[13] 1000.012.002		MAGNET S	S					1			
	[14] 1354.096.003		FORK S	S					1			
	[15] 4400.543.001		PIN-ROLLER & RETAINER S	S					1			
	[16] 4408.539.001		COVER ASSY S	S					1			
	[17] 4400.645.021		COIL ASSY-CLUTCH S	S					1			
	[18] 1900.139.063		RING-SNAP S	S					2			

3212

TRANSFER CASE-PART TIME

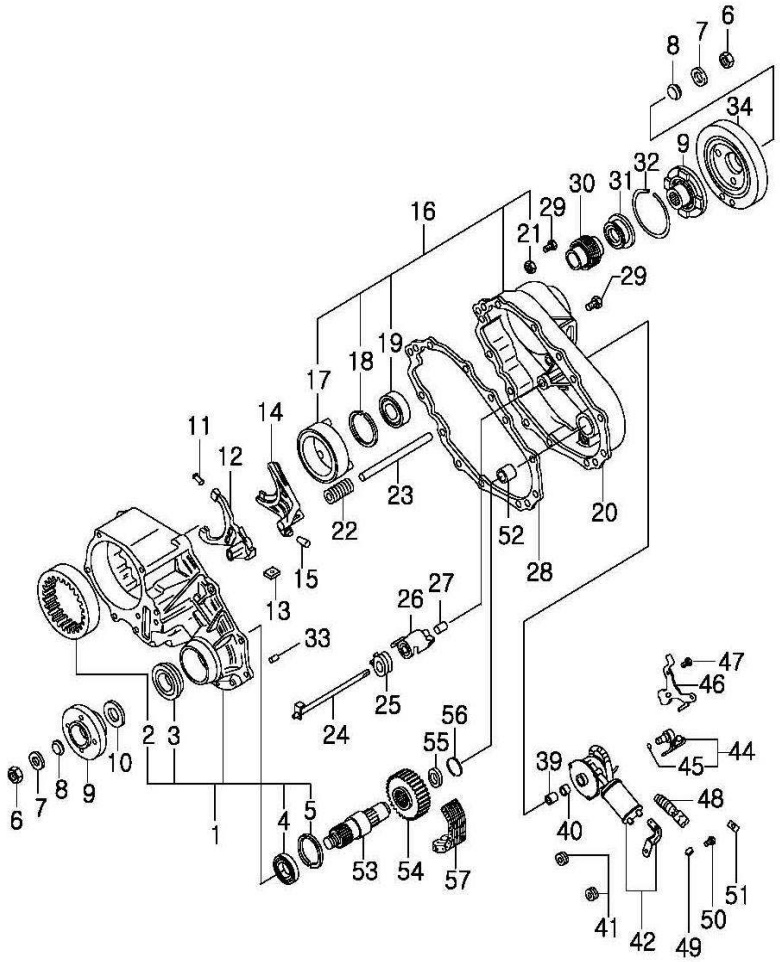

KEY NO.		PART NAME										
			ENGINE						APPLICATION		
I T C	PART NO.	T / M	G 2 3 D	G 3 2 D			OPTION	L / R	Q ' T Y	FROM	TO	REMARK
	[19] 1000.130.008		BEARING S	S					1			
	[20] 1354.039.002		COVER S	S					1			
	[21] 1300.149.002		NUT S	S					1			
	[22] 4400.156.001		SPRING-RETURN S	S					1			
	[23] 1350.100.001		SHAFT-RAIL S	S					1			
	[24] 1354.122.002		SHIFT-SHAFT S	S					1			
	[25] 1350.156.008		SPRING-LOCKUP FORK S	S					1			
	[25] 1350.156.008		SPRING-LOCKUP FORK S	S					1			
	[26] 1354.099.002		CAM-ELECTRIC SHIFT S	S					1			

3212

TRANSFER CASE-PART TIME

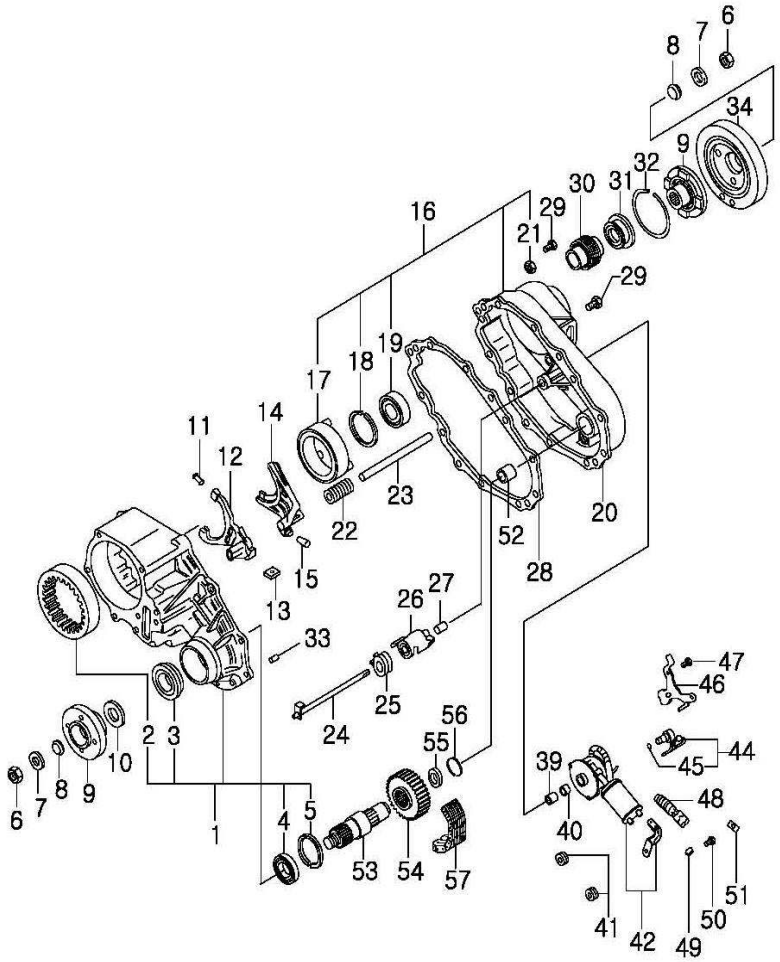

KEY NO.		PART NAME										
			ENGINE						APPLICATION			
I T C	PART NO.	T / M	G 2 3 D	G 3 2 D			OPTION	L / R	Q ' T Y	FROM	TO	REMARK
	[27] 1350.053.002		SPACER S	S					1			
	[28] 0000000353		GASKET S	S					1			
	[29] 1900.183.010		BOLT S	S					15			
	[30] 1350.110.003		GEAR-SPEEDO S	S			6T(RED)		1			
	[31] 1900.044.009		SEAL-OIL S	S					1			
	[32] 1900.139.040		RING-SNAP S	S					1			
	[33] 1900.043.008		PIN-DOWEL S	S					1			
	[34] 3203.006.000		DAMPER ASSY-TORSIONAL S	S					1			

3212

TRANSFER CASE-PART TIME

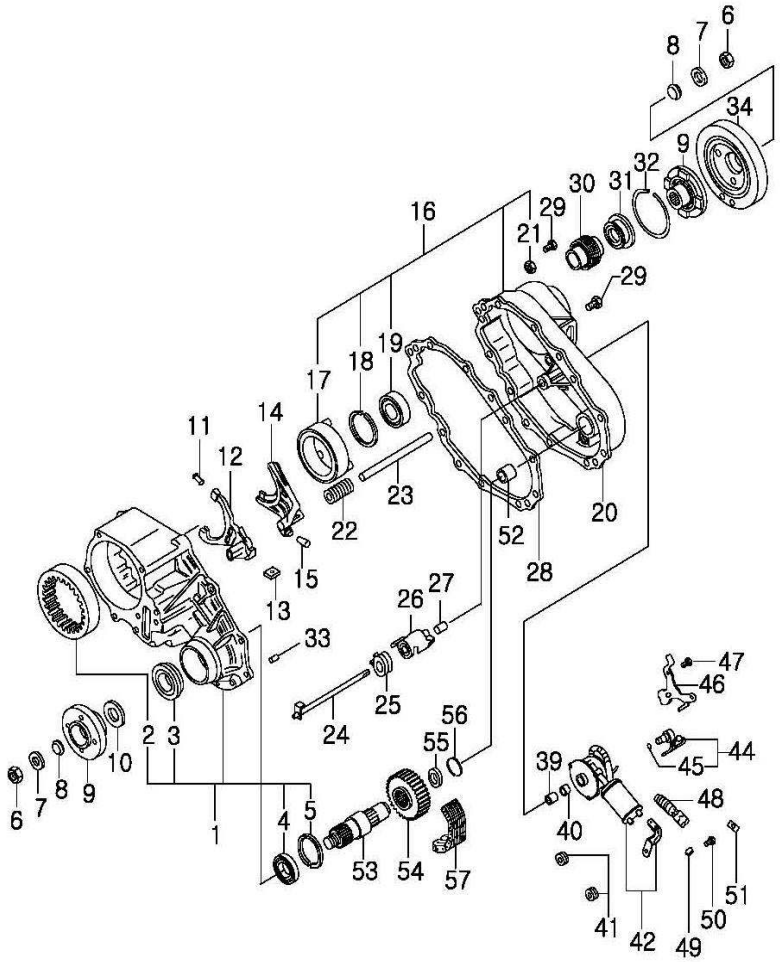

KEY NO.		PART NAME										
			ENGINE						APPLICATION		
I T C	PART NO.	T / M	G 2 3 D	G 3 2 D			OPTION	L / R	Q ' T Y	FROM	TO	REMARK
	[39] 1300.127.002		BEARING-SLEEVE S	S					1			
	[40] 1300.044.001		SEAL-OIL S	S					1			
	[41] 1300.052.007		PLUG-PIPE S	S					2			
	[42] 4408.648.006		MOTOR ASSY-T/C CONTROL S	S					1			
	[44] 4408.640.001		SENSOR ASSY-SPEED S	S					1			
	[45] 1000.141.014		PLUG-SPEEDO S	S					1			
	[46] 1900.185.003		BRKT-SPEED SENSOR S	S					1			
	[47] 1900.183.012		BOLT S	S					3			
	[48] 4408.140.001		CONNECTOR S	S					1			

3212

TRANSFER CASE-PART TIME

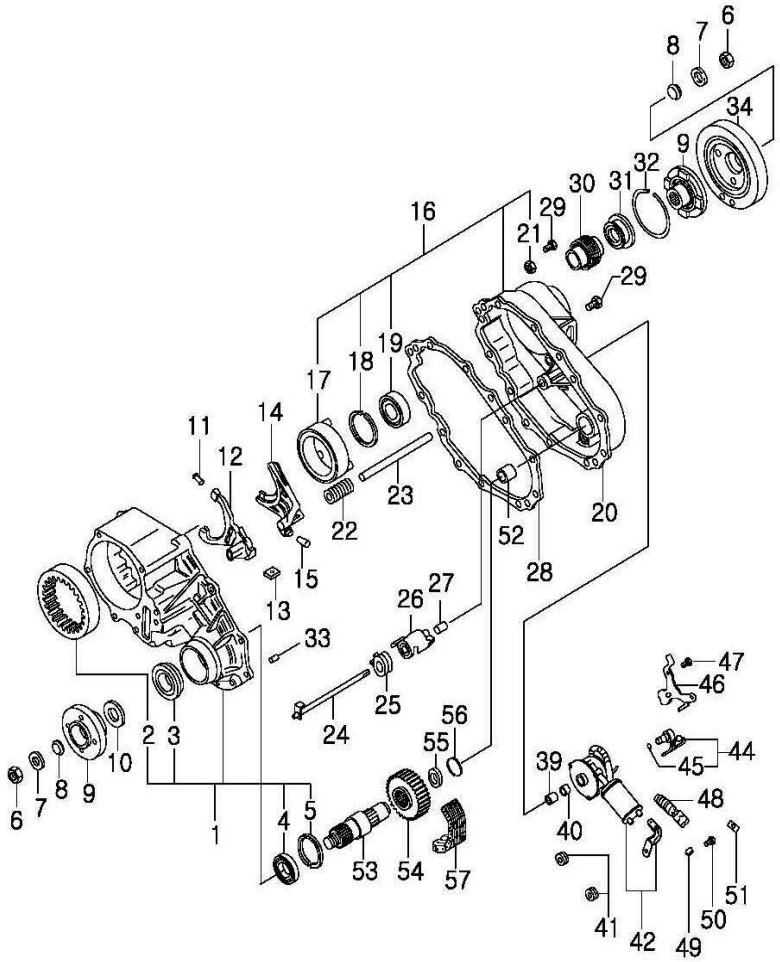

KEY NO.		PART NAME									
			ENGINE						APPLICATION		
ITC	PART NO.	T/M	G23D	G32D			OPTION	L/R	Q'TY	FROM	TO	REMARK
	[49] 4408.140.002		CLIP S	S					1			
	[50] 1900.183.002		SCREW S	S					1			
	[51] 1900.056.004		CLIP S	S					1			
	[52] 1000.132.039		BEARING-NEEDLE S	S					1			
	[53] 1354.171.004		SHAFT-FRT OUTPUT S	S					1			
	[54] 1354.144.003		SPROCKET-DRIVE S	S					1			
	[55] 1350.193.003		SPACER S	S					1			
	[56] 1000.139.038		RING-SNAP S	S					1			
	[57] 1350.143.001		CHAIN S	S					1			

3310

PROPELLER SHAFT

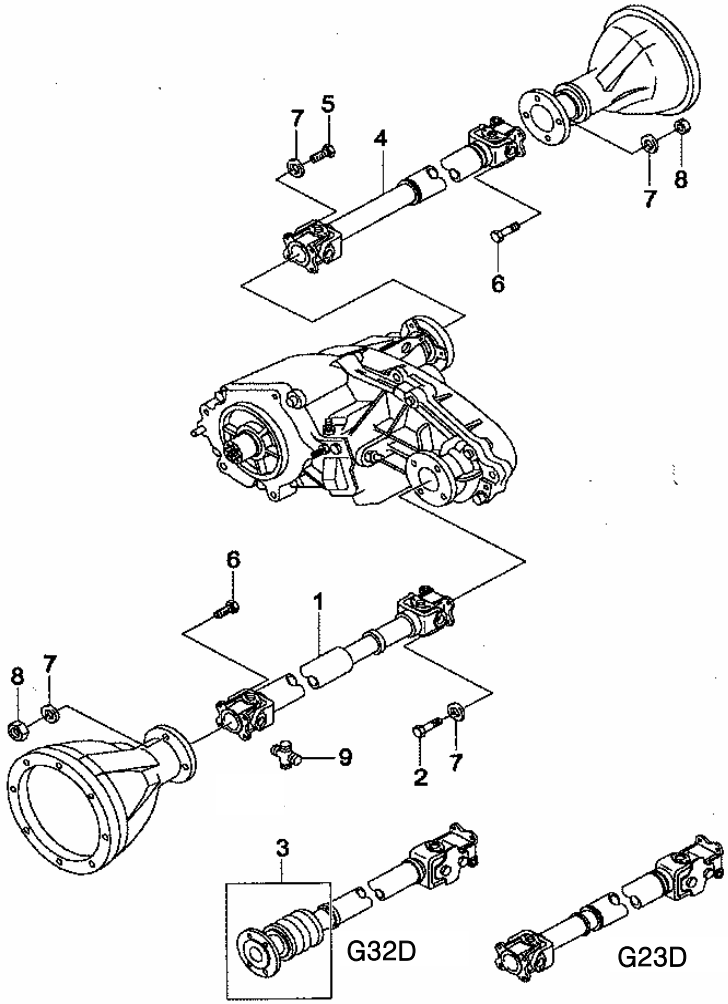

KEY NO.		PART NAME										
			ENGINE							APPLICATION		
ITC	PART NO.	T/M	G23D	G32D			OPTION	L/R	Q'TY	FROM	TO	REMARK
	[01]		SHAFT ASSY-PROPELLER FRT									
	PB150-3070		S						1			
	PB150-3040			S					1			
	[02]		BOLT-PROPELLER SHAFT									
	33102 05001		S	S					4			
	[03]		JOINT ASSY-FLANGE									
	33110 05101			S								
	[04]		SHAFT ASSY-PROPELLER RR									
	PB150-2070	M	S						1			
	PB150-2050	A	S						1			
	PB150-2310			S					1			
	[05]		BOLT-PROPELLER SHAFT									
	33102 05100		S	S					4			
	[06]		BOLT-HEX SEMS									
	95820 1035D		S	S					4			M10X1.25
	[07]		WASHER-SPRING									
	93310 1200D		S	S					4			M12
	[08]		NUT-HEX FLG									
	92898 1000D		S	S					4			M10X1.25

3610

AUTOMATIC TRANSMISSION - 4WD(DSI M74)

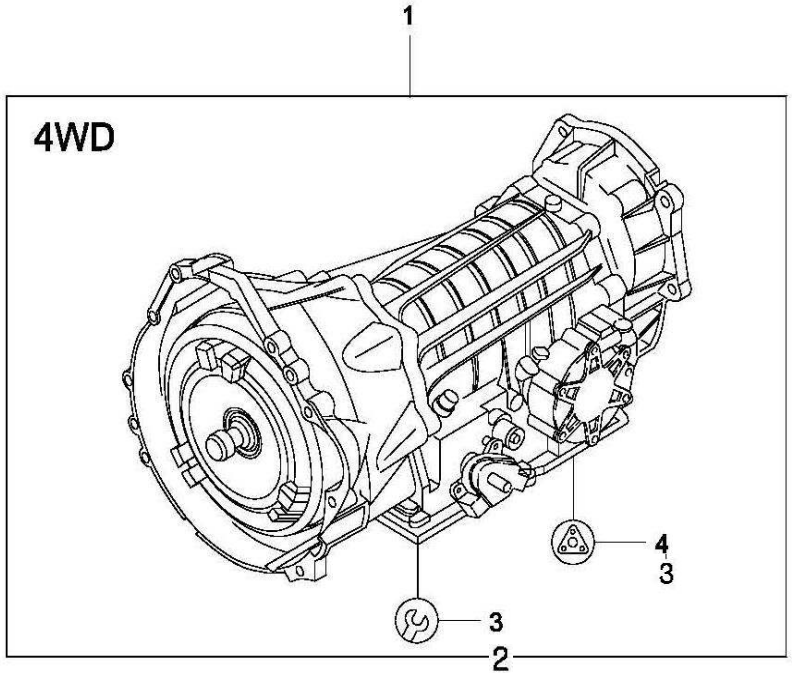

KEY NO.		PART NAME										
			ENGINE							APPLICATION		
I T C	PART NO.	T / M	G 2 3 D	G 3 2 D			OPTION	L / R	Q ' T Y	FROM	TO	REMARK
	[01] PB07D-0100	A	TRANSMISSION-AUTOMATIC S				&GG3&PM1.		1			0574-000030
	[02] 0555-340187	A	OVERHUAL KIT S						1			
	[03] 0555-340186	A	O-RING,GASKET&SEAL KIT S						1			

3611

CONVERTER HOUSING & OIL PAN (DSI M74)

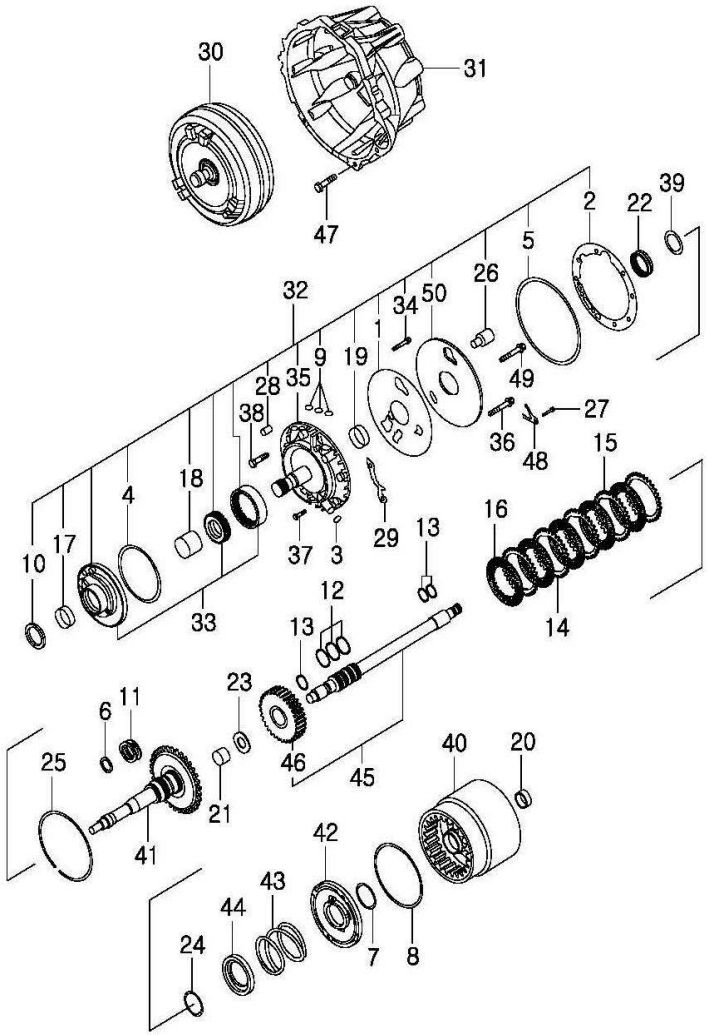

KEY NO.		PART NAME										
			ENGINE						APPLICATION			
ITC	PART NO.	T/M	G23D	G32D			OPTION	L/R	Q'TY	FROM	TO	REMARK
	[01] 0593-045055	A	GASKET S						1			
	[02] 0593-045056	A	GASKET S						1			
	[03] 0585-141019	A	RING-O S						2			
	[04] 0585-141008	A	RING-O S						1			
	[05] 0585-141029	A	RING-O S						1			
	[06] 0574-16007	A	RING-SEAL S						1			
	[07] 0585-141018	A	RING-O S						1			
	[08] 0585-141020	A	RING-O S						1			
	[09] 0585-141025	A	RING-O S						3			
	[10] 0593-044084	A	SEAL-OIL S						1			

3611

CONVERTER HOUSING & OIL PAN (DSI M74)

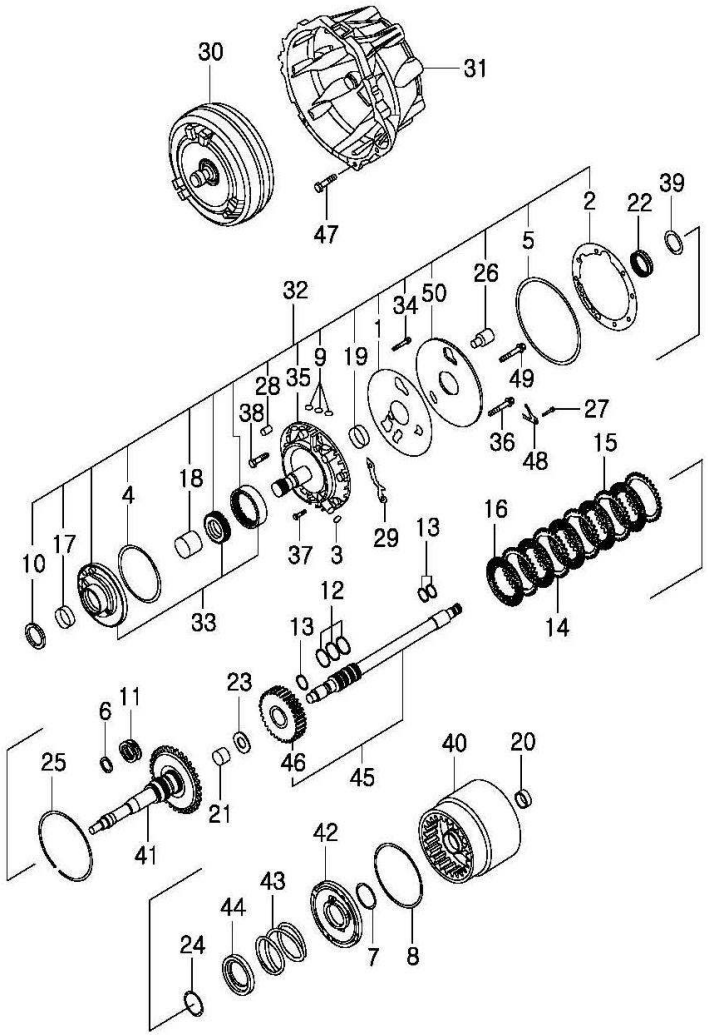

KEY NO.		PART NAME										
			ENGINE						APPLICATION			
I T C	PART NO.	T / M	G 2 3 D	G 3 2 D			OPTION	L / R	Q ' T Y	FROM	TO	REMARK
	[11] 0585-016004	A	RING-SEAL S						2			
	[12] 0585-016014	A	RING-SEAL S						4			
	[13] 0585-016013	A	RING-SEAL S						3			
	[14] 0585-166007	A	DISC-CLUTCH OTR S						A			
	[15] 0585-166008	A	DISC-CLUTCH OTR S						A			
	[16] 0585-666007	A	DISC-CLUTCH S						4			
	[17] 0585-427002	A	BUSH S						1			
	[18] 0593-427016	A	BUSH S						1			
	[19] 0585-427004	A	BUSH S						1			
	[20] 0585-427006	A	BUSH S						1			

3611

CONVERTER HOUSING & OIL PAN (DSI M74)

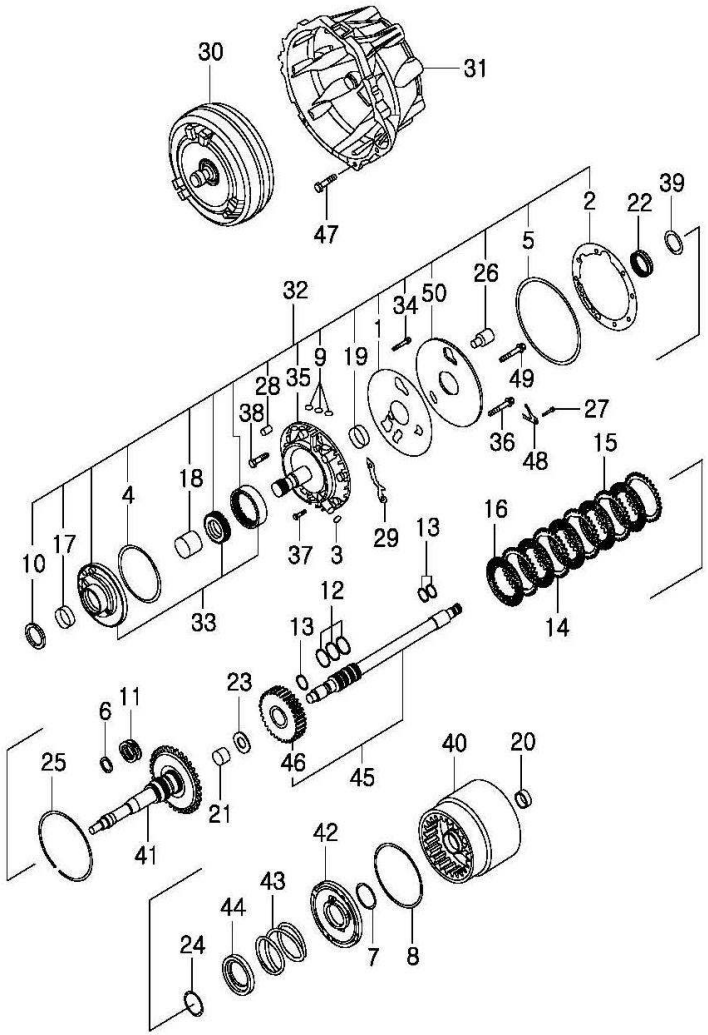

KEY NO.		PART NAME										
			ENGINE						APPLICATION			
I T C	PART NO.	T / M	G 2 3 D	G 3 2 D			OPTION	L / R	Q ' T Y	FROM	TO	REMARK
	[21] 0585-427007	A	BUSH S						1			
	[22] 0585-132022	A	BEARING-NEEDLE S						1			
	[23] 0585-193071	A	WASHER S						1			
	[24] 0585-139005	A	RING-RETAINNING S						1			
	[25] 0585-139017	A	RING-SNAP S						2			
	[26] 0593-640076	A	SOLENOID S						1			
	[27] 0585-183141	A	SCREW S						1			
	[28] 0593-043093	A	PIN S						1			
	[29] 0591-640055	A	PLATE ASSY-CONTACT S						1			

3611

CONVERTER HOUSING & OIL PAN (DSI M74)

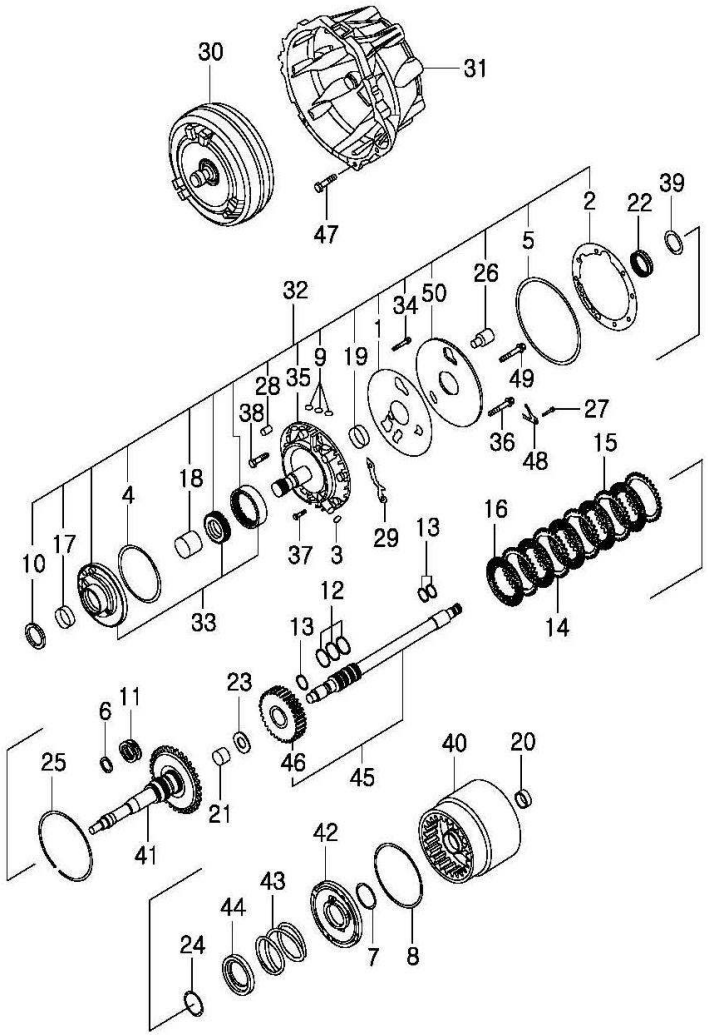

KEY NO.		PART NAME										
			ENGINE						APPLICATION			
ITC	PART NO.	T/M	G23D	G32D			OPTION	L/R	Q'TY	FROM	TO	REMARK
	[30] 0574-511047	A	CONVERTER ASSY-TORQUE S						1			160K
	[31] 0574-712002	A	HOUSING ASSY-CONVERTER S						1			
	[32] 0574-508062	A	PUMP ASSY S						1			
	[33] 0593-508061	A	PUMP ASSY S						1			
	[34] 0585-183135	A	BOLT S						1			
	[35] 0574-539069	A	COVER ASSY-PUMP S						1			
	[36] 0585-183124	A	BOLT S						5			
	[37] 0585-183125	A	BOLT S						6			
	[38] 0591-183159	A	BOLT S						2			

3611

CONVERTER HOUSING & OIL PAN (DSI M74)

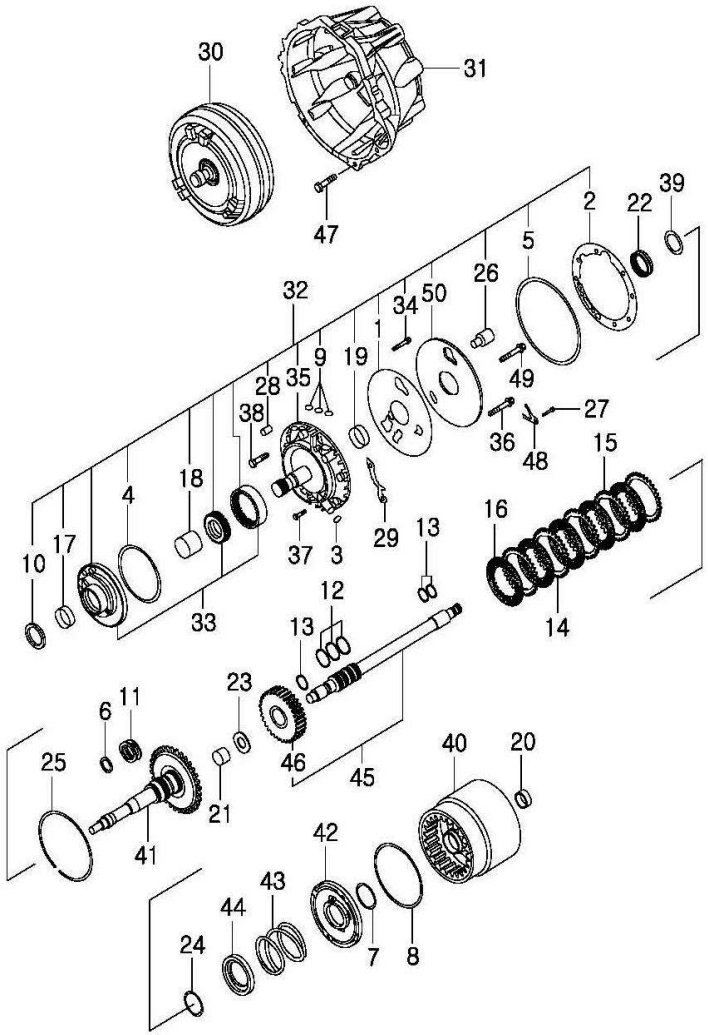

KEY NO. ITC	PART NO.	T/M	ENGINE G23D	ENGINE G32D	ENGINE	ENGINE	OPTION	L/R	Q'TY	APPLICATION FROM	APPLICATION TO	REMARK
	[39] 0585-037003	A	SHIM S						1			
	[40] 0574-625031	A	CYLINDER ASSY-CLUTCH MASTER S						1			
	[41] 0574-689019	A	SHAST ASSY-INPUT S						1			
	[42] 0574-624028	A	PISTON ASSY-CLUTCH S						1			
	[43] 0591-156146	A	SPRING S						1			
	[44] 0585-040028	A	RETAINER-SPRING S						1			
	[45] 0591-689018	A	SHAFT-ASSY-OVERDRIVE S						1			
	[46] 0585-090022	A	HUB-CLUTCH S						1			
	[47] 0585-183137	A	BOLT S						9			M12X32

3611

CONVERTER HOUSING & OIL PAN (DSI M74)

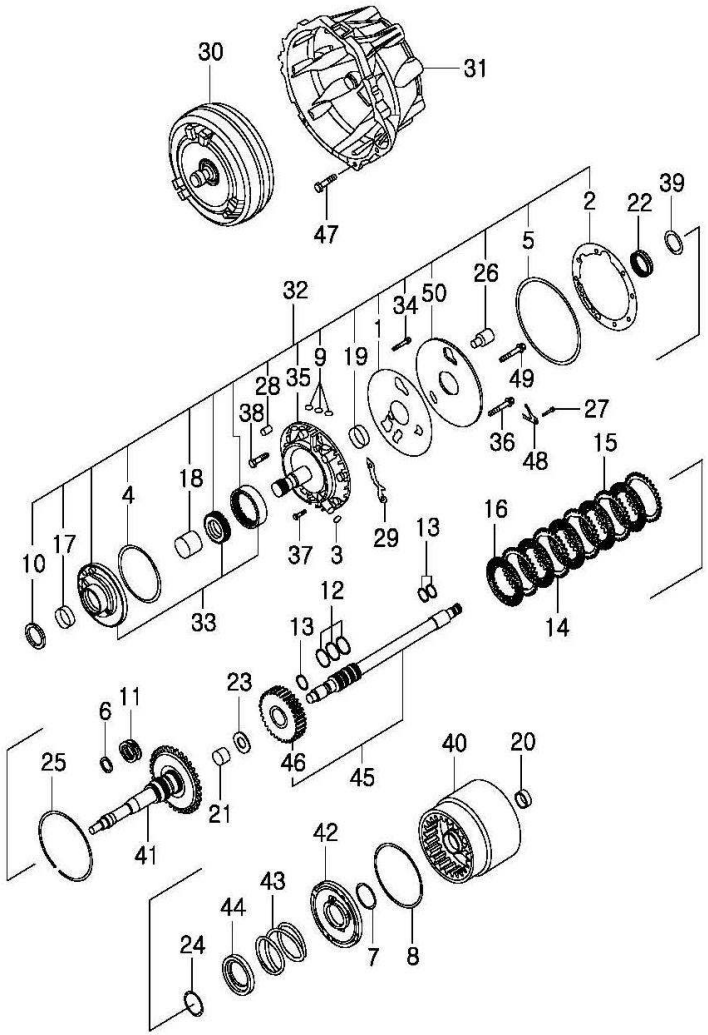

KEY NO.		PART NAME										
			ENGINE						APPLICATION		
I T C	PART NO.	T / M	G 2 3 D	G 3 2 D			OPTION	L / R	Q ' T Y	FROM	TO	REMARK
	[48] 0593-107004	A	RETAINER-SOLENOID S						1			
	[49] 0585-183141	A	SCREW S						5			
	[50] 0574-014044	A	PLATE-PUMP COVER S						1			

3612

TRANSMISSION HOUSING(DSI M74)

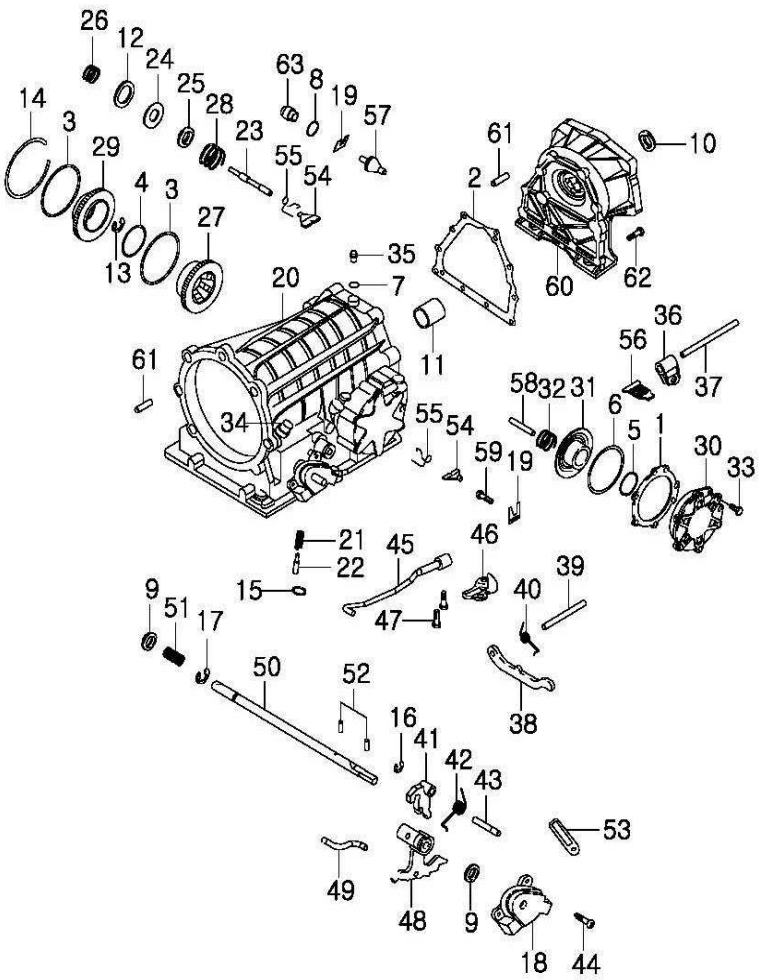

KEY NO.		PART NAME										
			ENGINE						APPLICATION			
I T C	PART NO.	T / M	G 2 3 D	G 3 2 D			OPTION	L / R	Q ' T Y	FROM	TO	REMARK
	[01] 0593-045064	A	GASKET-RR SERVO COVER S						1			
	[02] 0574-045080	A	GASKET S						1			
	[03] 0585-141022	A	RING-O S						2			
	[04] 0585-141032	A	RING-O S						1			
	[05] 0585-141028	A	RING-O S						1			
	[06] 0585-141010	A	RING-O S						1			
	[07] 0555-141054	A	RING-O S						1			
	[08] 0593-141045	A	RING-O S						1			
	[09] 0593-044080	A	SEAL-OIL S						2			

3612

TRANSMISSION HOUSING(DSI M74)

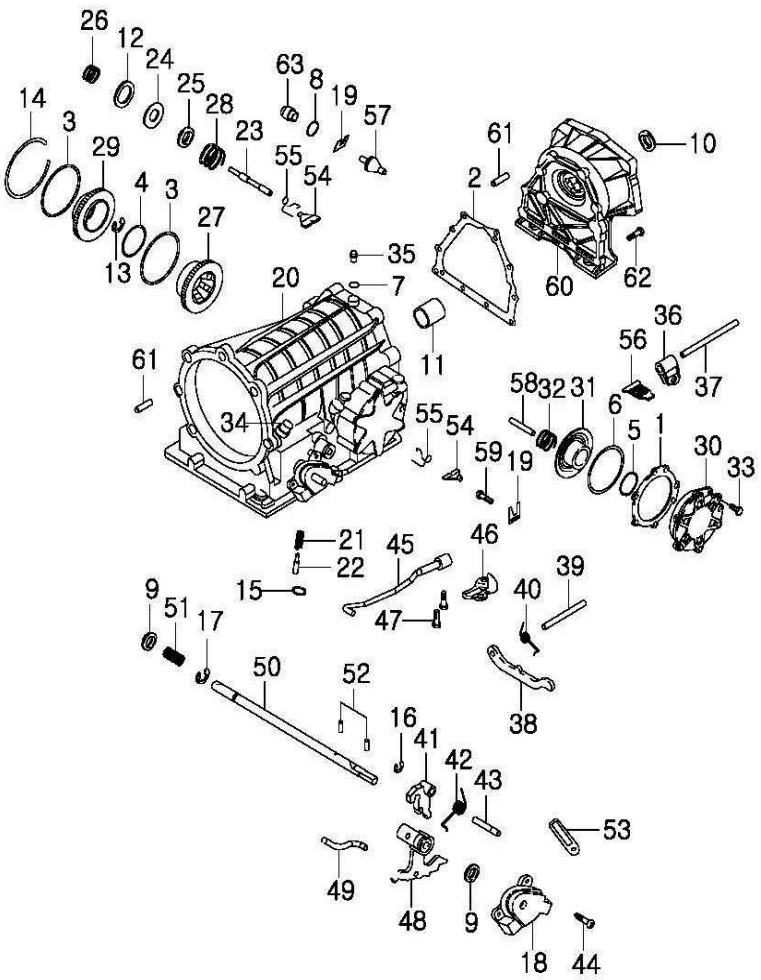

KEY NO.		PART NAME										
			ENGINE						APPLICATION			
ITC	PART NO.	T/M	G23D	G32D			OPTION	L/R	Q'TY	FROM	TO	REMARK
	[10]		SEAL-OIL									
	1300-044015	A	S						1			
	0574-044086	A	S						1			
	[11]		BUSH									
	0593-427019	A	S						1			
	[12]		WASHER									
	0585-193078	A	S						1			
	[13]		RING-RETAINING									
	0540-139005	A	S						1			
	[14]		RING-SNAP									
	0585-139009	A	S						1			
	[15]		RING-SNAP									
	0585-139008	A	S						1			
	[16]		RING-RETAINING									
	0555-139174	A	S						1			
	[17]		RING-RETAINING									
	0540-139005	A	S						1			
	[18]		SWITCH ASSY-INHIBITOR									
	0593-640105	A	S						1			

3612

TRANSMISSION HOUSING(DSI M74)

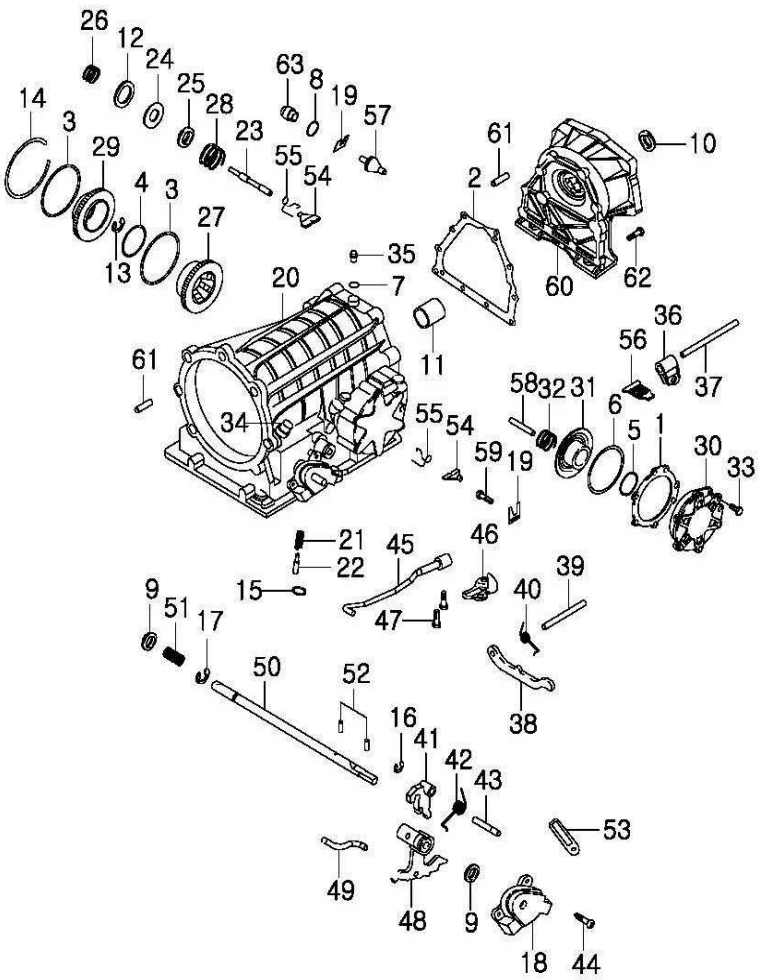

KEY NO.		PART NAME										
			ENGINE						APPLICATION		
I T C	PART NO.	T / M	G 2 3 D	G 3 2 D			OPTION	L / R	Q ' T Y	FROM	TO	REMARK
	[19]		SHIM									
	0574-037017	A	S						1			T0.95~1.05
	0574-037018	A	S						1			T1.15~1.25
	0574-037019	A	S						1			T1.44~1.56
	0574-037020	A	S						1			T1.73~1.87
	0574-037021	A	S						1			T1.93~1.07
	0574-037022	A	S						1			T2.12~2.28
	0574-037023	A	S						1			T2.42~2.58
	0574-037024	A	S						1			T2.61~2.79
	0574-037026	A	S						1			T3.0
	[20]		CASE ASSY-T/M									
	0574-565019	A	S						1			
	[21]		SPRING									
	0585-156129	A	S						1			
	[22]		VALVE-BIR EXHAUST									
	0585-237069	A	S						1			
	[23]		ROD-FRT SERVO PUSH									
	0585-190022	A	S						1			
	[24]		SPRING									
	0585-156125	A	S						1			

3612

TRANSMISSION HOUSING(DSI M74)

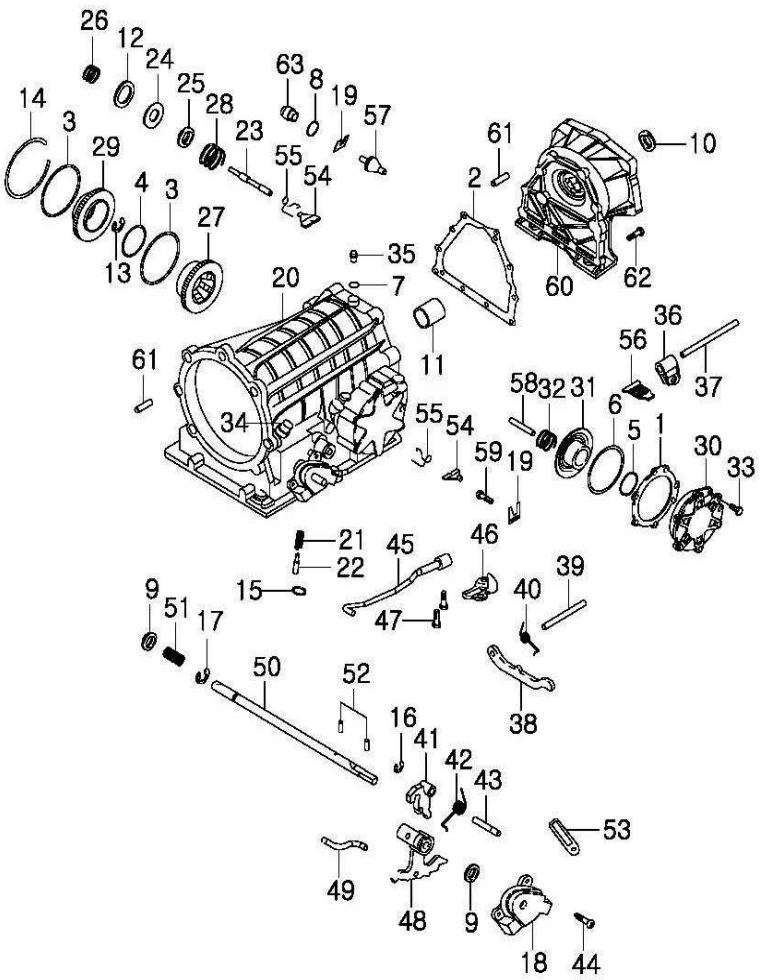

KEY NO.		PART NAME										
			ENGINE						APPLICATION			
I T C	PART NO.	T / M	G 2 3 D	G 3 2 D			OPTION	L / R	Q ' T Y	FROM	TO	REMARK
	[25] 0593-040040	A	SEAT-SPRING S						1			
	[26] 0585-156116	A	SPRING S						1			
	[27] 0585-124011	A	PISTON-FRT SERVO S						1			
	[28] 0593-156147	A	SPRING S						1			
	[29] 0591-039001	A	COVER-FRT SERVO S						1			
	[30] 0593-039002	A	COVER ASSY-RR SERVO S						1			
	[31] 0585-124023	A	PISTON-RR SERVO S						1			
	[32] 0585-156107	A	SPRING S						1			
	[33] 0593-183175	A	BLOT S						6			M8X1.25X25

3612

TRANSMISSION HOUSING(DSI M74)

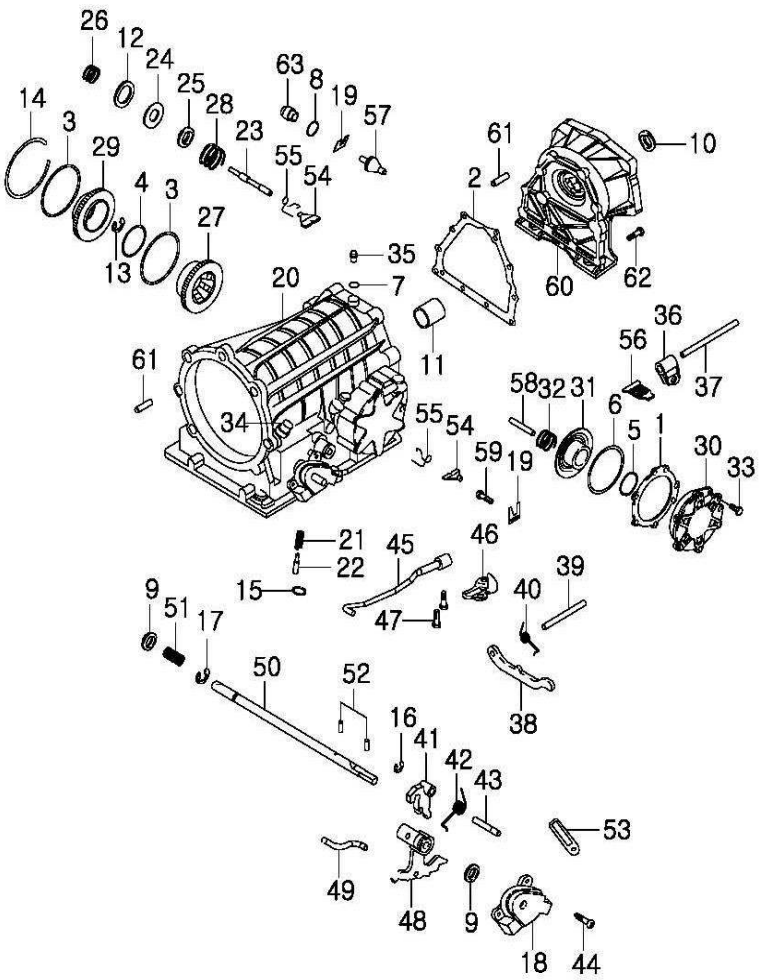

KEY NO.		PART NAME										
			ENGINE						APPLICATION			
I T C	PART NO.	T / M	G 2 3 D	G 3 2 D			OPTION	L / R	Q ' T Y	FROM	TO	REMARK
	[34] 0574-088020	A	CONNECTOR S						2			
	[35] 0552-072006	A	BREATHER S						1			
	[36] 0585-098057	A	LEVER-RR SERVO S						1			
	[37] 0574-043090	A	PIN S						1			
	[38] 0574-504008	A	PAWL-PARKING BRAKE S						1			
	[39] 0574-043091	A	PIN S						1			
	[40] 0574-156160	A	SPRING S						1			
	[41] 0585-098063	A	LEVER ASSY-PARKING BRAKE ROD S						1			
	[42] 0585-156104	A	SPRING S						1			

3612

TRANSMISSION HOUSING(DSI M74)

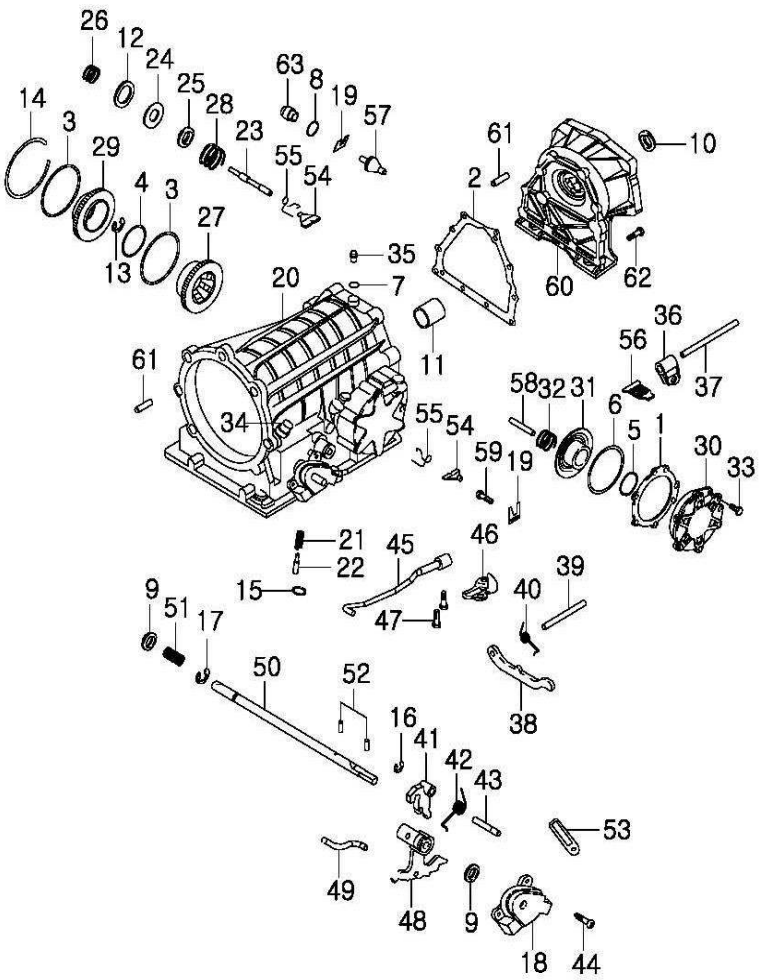

KEY NO.		PART NAME										
			ENGINE						APPLICATION			
I T C	PART NO.	T / M	G 2 3 D	G 3 2 D			OPTION	L / R	Q ' T Y	FROM	TO	REMARK
	[43] 0585-043074	A	PIN S						1			
	[44] 0540-083062	A	SCREW S						2			
	[45] 0574-690011	A	ROD ASSY-ACTUATING S						1			
	[46] 0574-099028	A	PLATE-CAM RETAINING S						1			
	[47] 0585-183132	A	SCREW S						2			
	[48] 0593-598064	A	LEVER ASSY-MANUAL VALVE DETENT S						1			
	[49] 0585-190138	A	LINK-MANUAL VALVE ACTUATING S						1			
	[50] 0574-122011	A	SHAFT-MANUAL VALVE DETENT S						1			
	[51] 0555-156025	A	SPRING S						1			

3612

TRANSMISSION HOUSING(DSI M74)

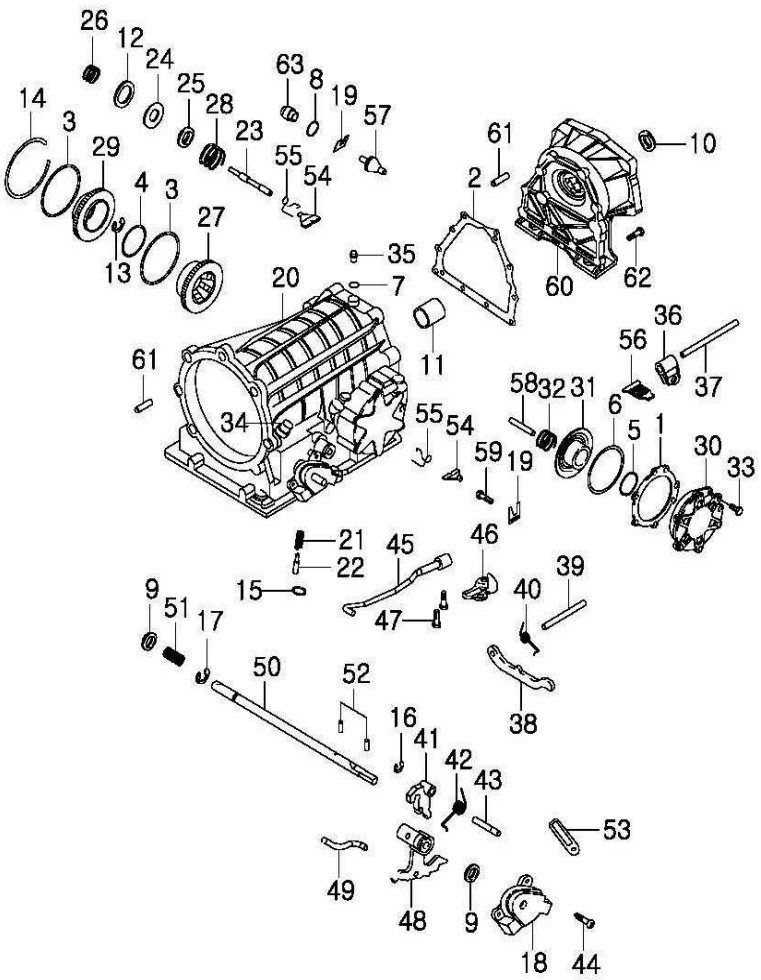

KEY NO.		PART NAME										
			ENGINE						APPLICATION		
I T C	PART NO.	T / M	G 2 3 D	G 3 2 D			OPTION	L / R	Q ' T Y	FROM	TO	REMARK
	[52]		PIN									
	0585-043078	A	S						2			
	[53]		CLIP									
	0574-056062	A	S						1			
	[54]		STRUT-FRT BAND									
	0593-190033	A	S						2			
	[55]		RETAINER									
	0593-056046	A	S						2			
	[56]		STRUT-APPLY									
	0585-190027	A	S						1			
	[57]		STRUT-RR SERVO ANCHOR									
	0593-190035	A	S						1			
	[58]		ROD-RR SERVO									
	0585-190028	A	S						1			
	[59]		ANCHOR-STRUT									
	0593-090034	A	S						1			
	[60]		HOUSING ASSY-ADAPTOR									
	0574-566005	A	S						1			
	0574-566006	A	S				2WD ONLY		1			

3612

TRANSMISSION HOUSING(DSI M74)

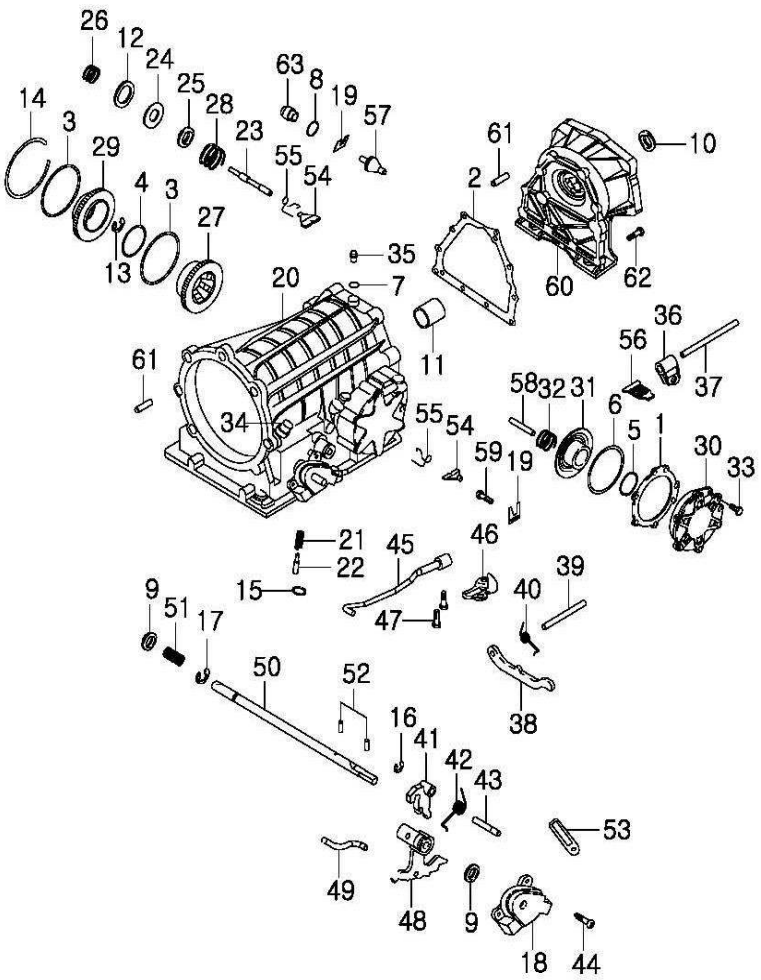

KEY NO.		PART NAME										
			ENGINE						APPLICATION			
I T C	PART NO.	T / M	G 2 3 D	G 3 2 D			OPTION	L / R	Q ' T Y	FROM	TO	REMARK
	[61] 0574-043092	A	PIN-DOWEL S						2			
	[62] 0593-183175	A	BLOT S						10			
	[63] 0593-052010	A	PLUG-FILLER S						1			

3613

VALVE BODY(DSI M74)

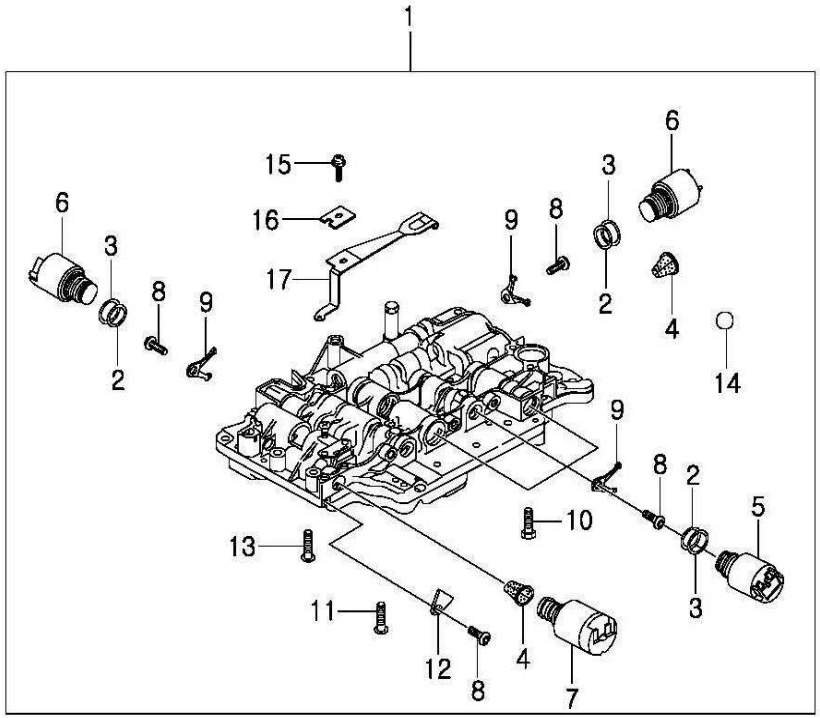

KEY NO.		PART NAME										
			ENGINE						APPLICATION			
I T C	PART NO.	T / M	G 2 3 D	G 3 2 D			OPTION	L / R	Q ' T Y	FROM	TO	REMARK
	[01] 0574-736090	A	BODY ASSY-VALVE S						1			
	[02] 0585-141037	A	RING-O S						1			
	[03] 0585-141039	A	RING-O S						1			
	[04] 0591-238007	A	FILTER-SOLENOID S						1			
	[05] 0593-640076	A	SOLENOID S						3			
	[06] 0585-640029	A	SOLENOID S						3			
	[07] 0593-640078	A	SOLENOID S						1			
	[08] 0585-183141	A	SCREW S						1			
	[09] 0585-056040	A	RETAINER-SOLENOID S						1			

3613

VALVE BODY(DSI M74)

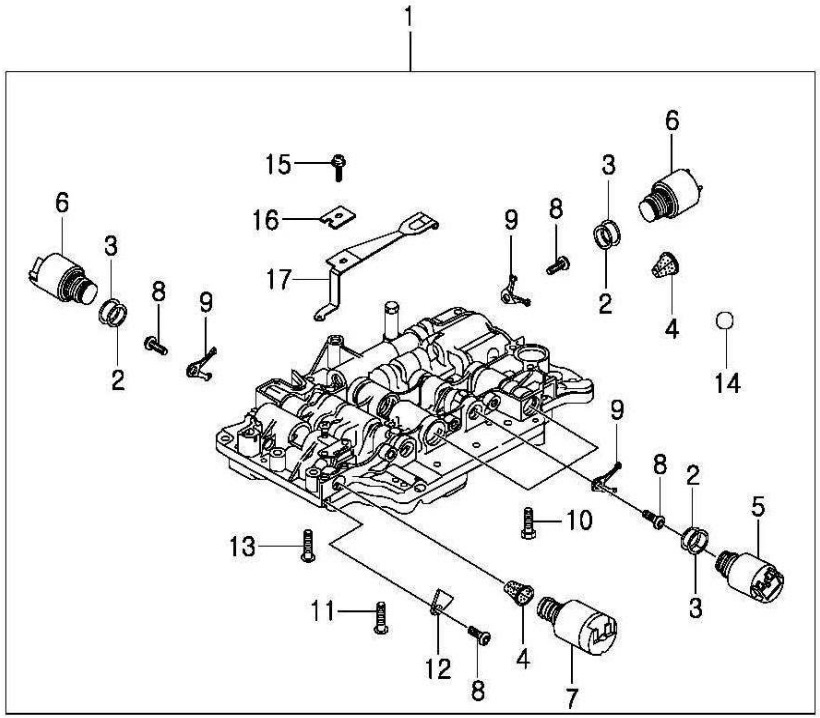

KEY NO.		PART NAME										
			ENGINE						APPLICATION		
I T C	PART NO.	T / M	G 2 3 D	G 3 2 D			OPTION	L / R	Q ' T Y	FROM	TO	REMARK
	[10] 0591-183160	A	BOLT S						1			
	[11] 0585-183152	A	SCREW S						7			
	[12] 0593-107004	A	RETAINER-SOLENOID S						1			
	[13] 0585-183153	A	SCREW S						5			
	[14] 0585-109004	A	BALL-NYLON S						1			
	[15] 058-183132	A	SCR S						3			
	[16] 0585-040034	A	RETAINER-DETENT SPRING S						1			
	[17] 0585-656006	A	SRING ASSY-DETENT S						1			

3614

OIL PAN(DSI M74)

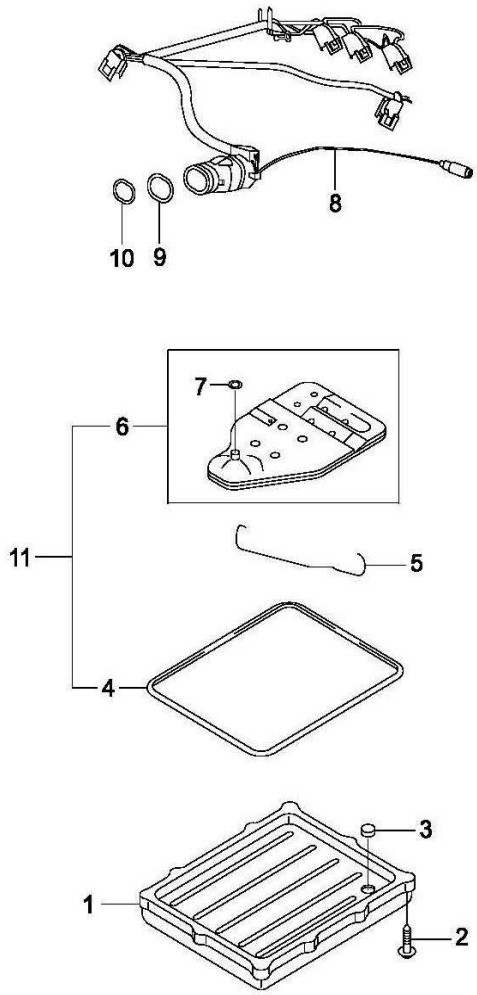

KEY NO.		PART NAME									
			ENGINE						APPLICATION		
ITC	PART NO.	T/M	G23D	G32D			OPTION	L/R	Q'TY	FROM	TO	REMARK
	[01] 0585-013004	A	PAN-S						1			
	[02] 0585-683011	A	SCRS						9			
	[03] 0540-012001	A	MAGNETS						1			
	[04] 0585-045045	A	GASKET-OIL PANS						1			
	[05] 0593-056059	A	CLIPS						1			
	[06] 0572-738004	A	FILTER ASSY-OILS						1			
	[07] 0555-332222	A	FILTER-MULTILIPS						1			
	[08] 0593-640084	A	WIRING ASSY-ROOMS						1			
	[09] 0593-141044	A	RING-OS						1			

3614

OIL PAN(DSI M74)

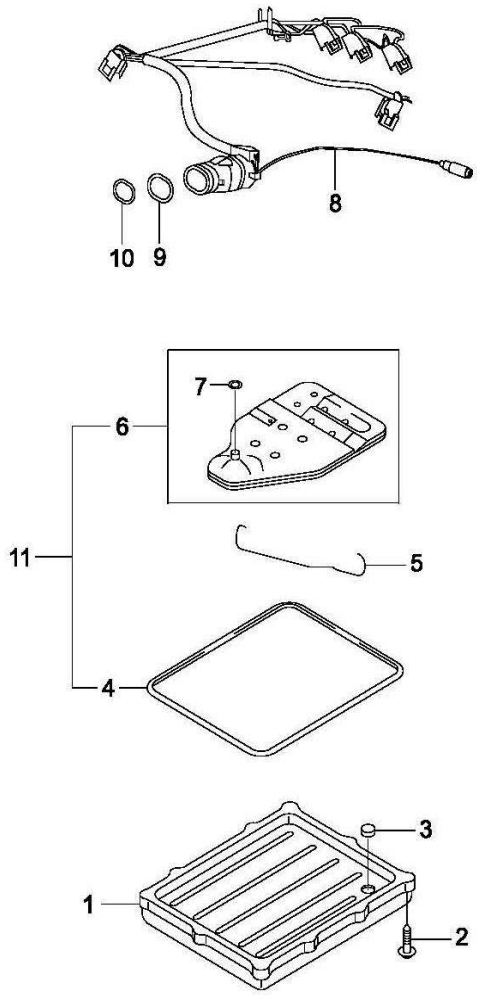

KEY NO.		PART NAME										
			ENGINE							APPLICATION		
I T C	PART NO.	T / M	G 2 3 D	G 3 2 D			OPTION	L / R	Q ' T Y	FROM	TO	REMARK
	[10] 0585-141017	A	RING-O S						1			
	[11] 0555-334783	A	FILTER SERVICE KIT S						1			

3615

CLUTCH(DSI M74)

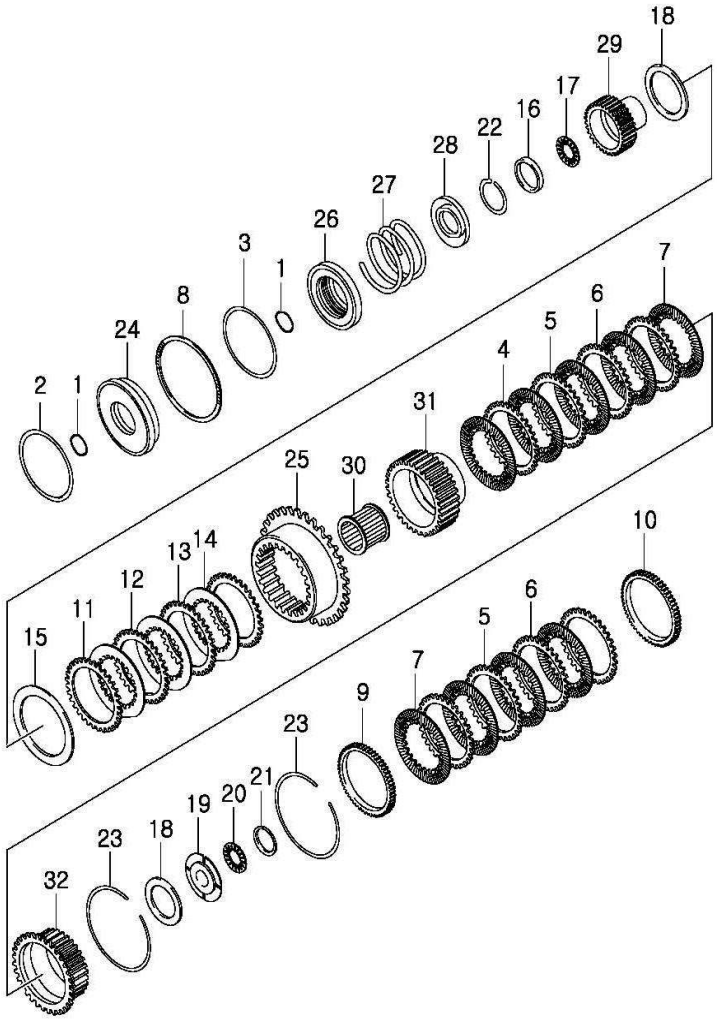

KEY NO.		PART NAME										
			ENGINE						APPLICATION			
ITC	PART NO.	T/M	G23D	G32D			OPTION	L/R	Q'TY	FROM	TO	REMARK
	[01] 0585-141018	A	RING-OS						2			
	[02] 0585-141021	A	RING-OS						1			
	[03] 0585-141036	A	RING-OS						1			
	[04] 0585-166026	A	DISC-CLUTCH OTRS						A			
	[05] 0585-166007	A	DISC-CLUTCH OTRS						A			
	[06] 0585-166008	A	DISC-CLUTCH OTRS						A			
	[07] 0585-666007	A	DISC-CLUTCHS						4			
	[08] 0574-050026	A	WASHERS						1			
	[09] 0593-062018	A	PLATE-CLUTCHS						1			

3615

CLUTCH(DSI M74)

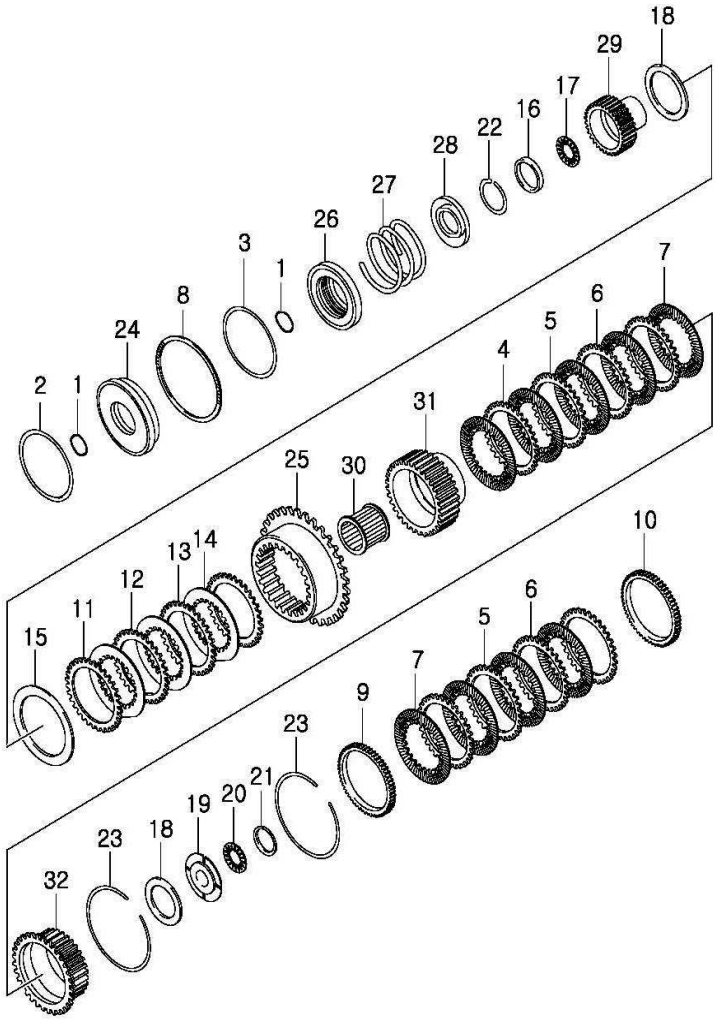

KEY NO.		PART NAME										
			ENGINE						APPLICATION			
ITC	PART NO.	T/M	G23D	G32D			OPTION	L/R	Q'TY	FROM	TO	REMARK
	[10] 0593-050025	A	WASHER-WAVE S						1			
	[11] 0585-166030	A	DISC-CLUTCH OTR S						3			
	[12] 0585-166037	A	DISC-CLUTCH OTR S						A			
	[13] 0585-166036	A	DISC-CLUTCH OTR S						A			
	[14] 0585-666010	A	DISC-CLUTCH OTR S						3			
	[15] 0585-050023	A	WASHER S						1			
	[16] 0585-193066	A	PLATE-THRUST S						1			
	[17] 058-132011	A	BEARING-NEELDLE S						1			
	[18] 0585-193072	A	WASHER S						1			

3615

CLUTCH(DSI M74)

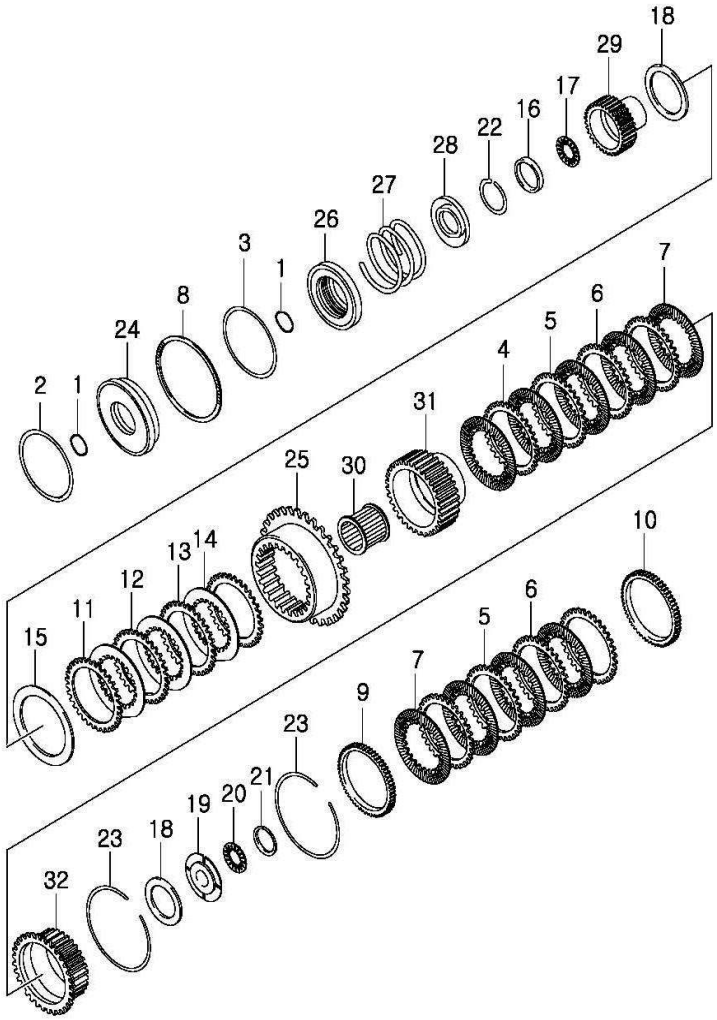

KEY NO.		PART NAME										
			ENGINE						APPLICATION			
ITC	PART NO.	T/M	G23D	G32D			OPTION	L/R	Q'TY	FROM	TO	REMARK
	[19] 0585-193076	A	PLATE-THRUST S						1			
	[20] 058-132011	A	BEARING-NEEDLE S						1			
	[21] 0585-193080	A	PLATE-THRUST S						1			
	[22] 0585-139005	A	RING-RETAINING S						1			
	[23] 0585-139017	A	RING-SNAP S						1			
	[24] 0593-124031	A	PISTON ASSY-CLUTCH S						1			
	[25] 0585-103061	A	SLEEVE-ACTUATING CLU S						1			
	[26] 0593-124030	A	PISTON ASSY-CLUTCH S						1			
	[27] 0585-156092	A	SPRING S						1			

3615

CLUTCH(DSI M74)

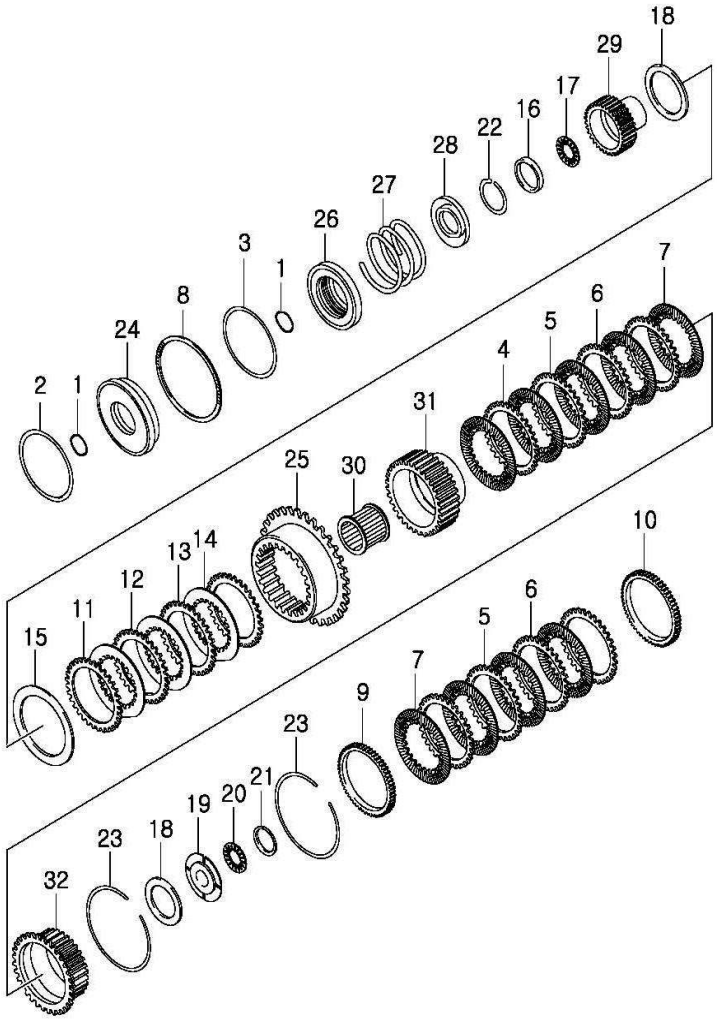

KEY NO.		PART NAME										
			ENGINE						APPLICATION			
ITC	PART NO.	T/M	G23D	G32D			OPTION	L/R	Q'TY	FROM	TO	REMARK
	[28] 0585-040027	A	RETAINER-SPRING S						1			
	[29] 0585-090025	A	HUB-CLUTCH MACHINING S						1			
	[30] 0593-506012	A	CLUTCH ASSY S						1			
	[31] 0585-090024	A	HUB-CLUTCH MACHINING S						1			
	[32] 0593-090029	A	HUB-RR CLUTCH S						1			

3616

OUTPUT SHAFT(DSI M74)

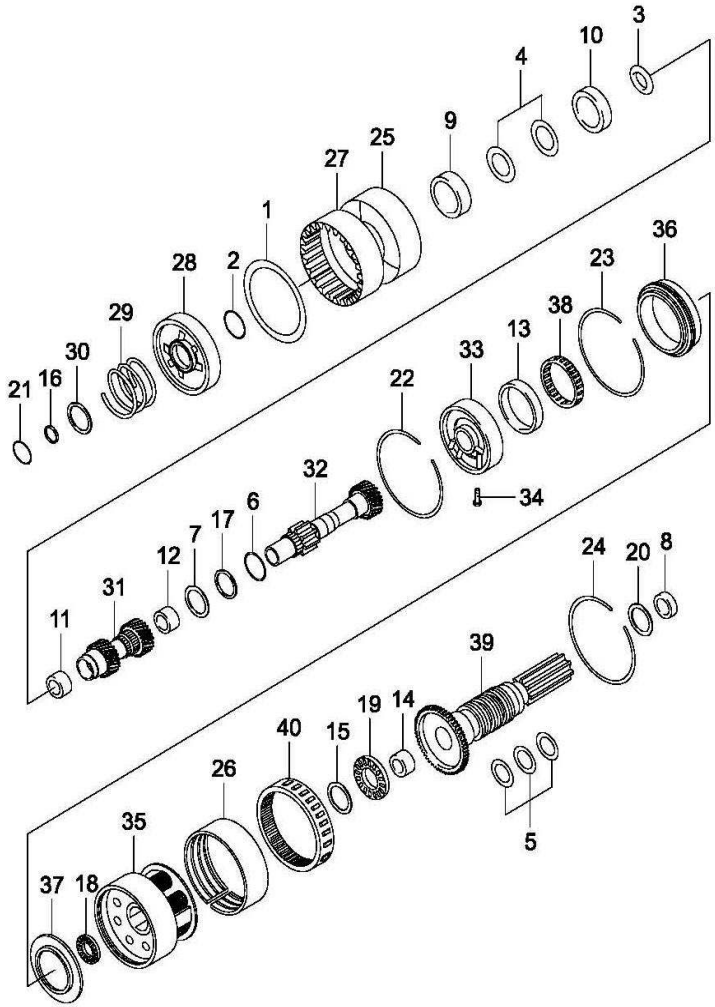

KEY NO.		PART NAME										
			ENGINE						APPLICATION			
ITC	PART NO.	T/M	G23D	G32D			OPTION	L/R	Q'TY	FROM	TO	REMARK
	[01] 0585-141021	A	RING-OS						1			
	[02] 0585-141015	A	RING-OS						1			
	[03] 0585-141027	A	RING-OS						1			
	[04] 0585-016011	A	RING-SEALS						2			
	[05] 0585-016015	A	RING-SEALS						3			
	[06] 0574-193105	A	WASHERS						1			
	[07] 0574-193102	A	WASHERS						1			
	[08] 0585-427001	A	BUSHS						1			
	[09] 0585-427008	A	BUSHS						1			

3616

OUTPUT SHAFT(DSI M74)

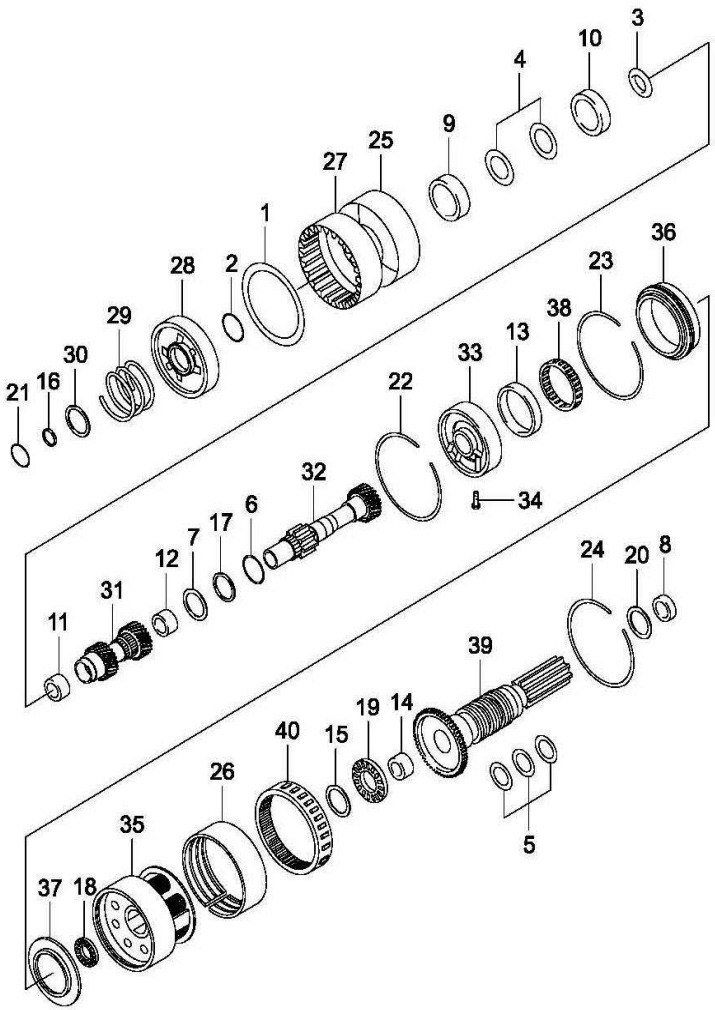

KEY NO.		PART NAME										
			ENGINE						APPLICATION			
I T C	PART NO.	T / M	G 2 3 D	G 3 2 D			OPTION	L / R	Q ' T Y	FROM	TO	REMARK
	[10] 0585-427009	A	BUSH S						1			
	[11] 0500-247021	A	BUSH S						1			
	[12] 0500-247022	A	BUSH S						1			
	[13] 0585-427012	A	BUSH S						1			
	[14] 0585-427013	A	BUSH S						1			
	[15] 0595-193081	A	WASHER S						1			
	[16] 0585-139007	A	RING-SNAP S						1			
	[17] 0574-132029	A	BEARING-NEEDLE S						1			
	[18] 0595-132027	A	BEARING-NEEDLE S						1			

3616

OUTPUT SHAFT(DSI M74)

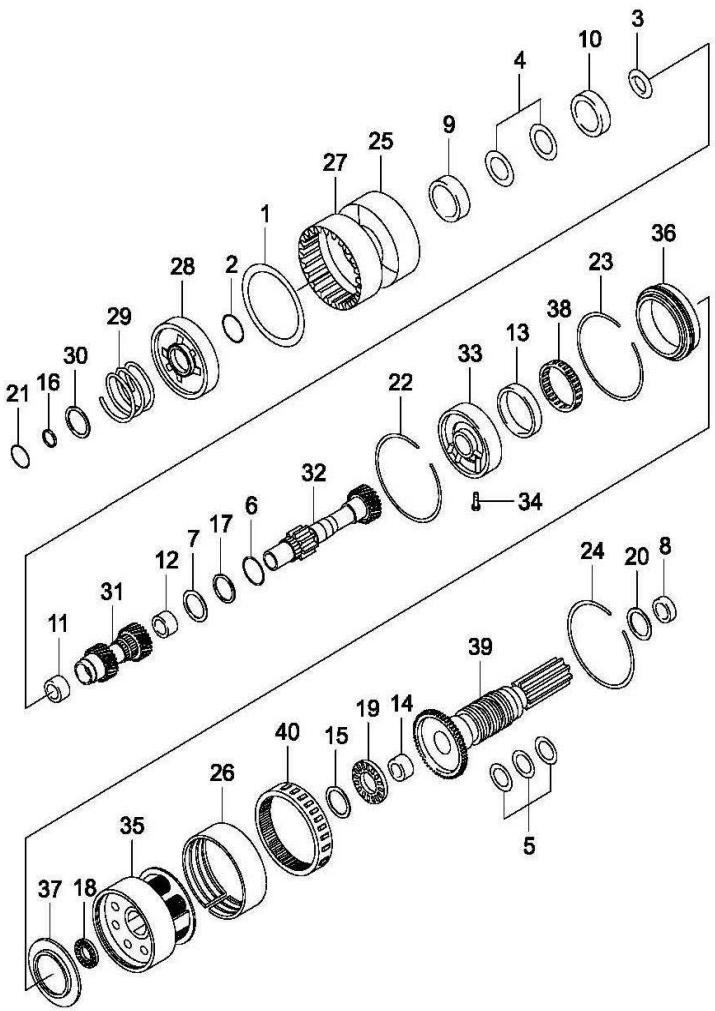

KEY NO.		PART NAME										
			ENGINE						APPLICATION			
ITC	PART NO.	T/M	G23D	G32D			OPTION	L/R	Q'TY	FROM	TO	REMARK
	[19] 0555-143029	A	BEARING-NEEDLE S						1			
	[20] 0585-132013	A	BEARING-NEEDLE S						1			
	[21] 0585-053020	A	SPACER-THRUST S						1			
	[22] 0585-139016	A	RING-SNAP S						1			
	[23] 0585-139014	A	RING-RETAINING S						1			
	[24] 0574-139018	A	RING-SNAP S						1			
	[25] 0574-557114	A	BAND-FRT S						1			
	[26] 0574-557107	A	BAND-RR S						1			
	[27] 0574-625038	A	CYLINDER ASSY-CLUTCH MASTER S						1			

3616

OUTPUT SHAFT(DSI M74)

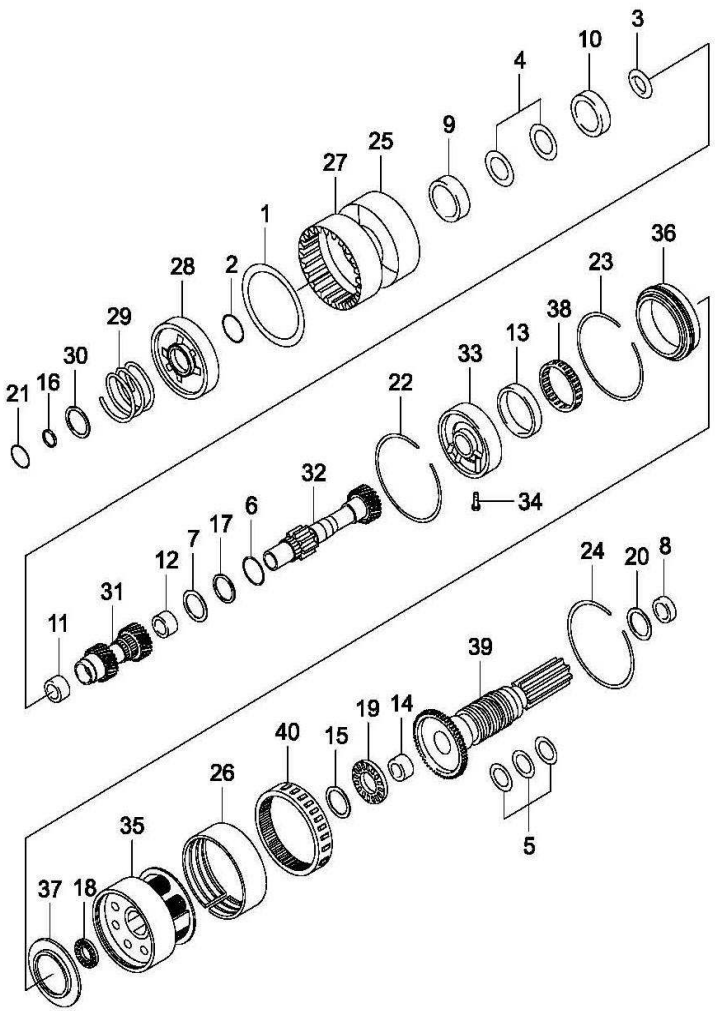

KEY NO.		PART NAME										
			ENGINE						APPLICATION			
ITC	PART NO.	T/M	G23D	G32D			OPTION	L/R	Q'TY	FROM	TO	REMARK
	[28] 0593-124039	A	PISTON ASSY-CLUTCH S						1			
	[29] 0585-156092	A	SPRING S						1			
	[30] 0585-040029	A	RETANER-SPRING S						1			
	[31] 0574-665033	A	GEAR ASSY-REVERSE SUN S						1			
	[32] 0574-165029	A	GEAR-PLANETARY SUN S						1			
	[33] 0593-507020	A	SUPT ASSY-CTR S						1			
	[34] 0585-183131	A	SCREW S						1			
	[35] 0574-659013	A	CARRIER ASSY-PLANETARY S						1			
	[36] 0585-018013	A	RACE-OTR S						1			

3616

OUTPUT SHAFT(DSI M74)

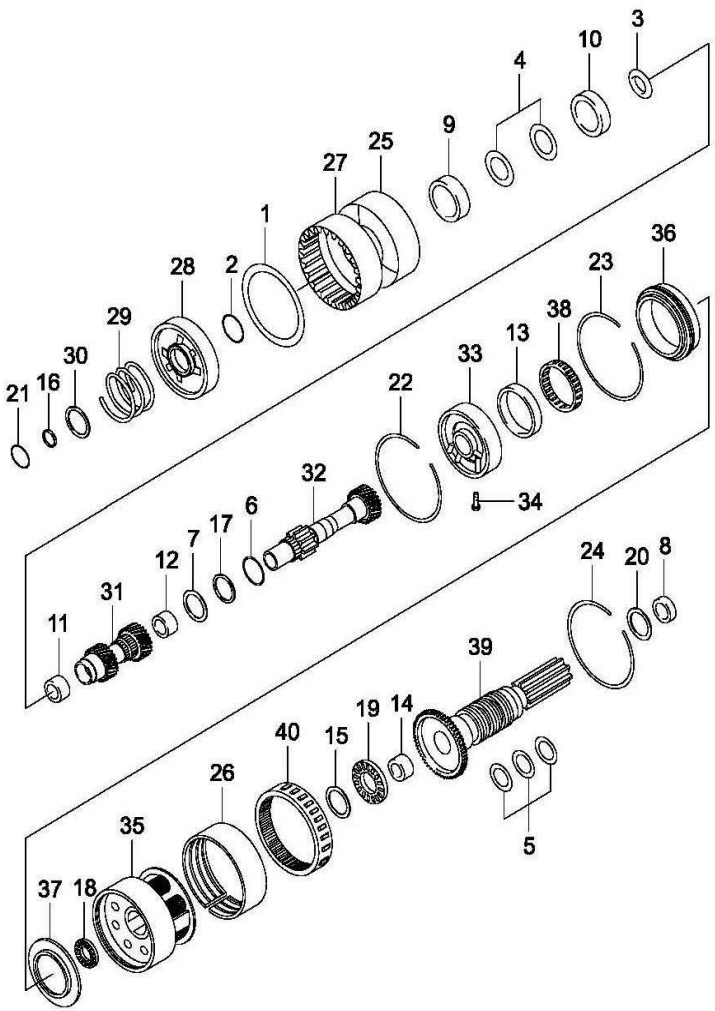

KEY NO.		PART NAME										
			ENGINE						APPLICATION			
ITC	PART NO.	T/M	G23D	G32D			OPTION	L/R	Q'TY	FROM	TO	REMARK
	[37] 0585-107002	A	RETAINER S						1			
	[38] 0593-506013	A	CLUTCH ASSY-RR S						1			
	[39] 0574-671012	A	SHAFT ASSY-OUTPUT S						1			
	[40] 0574-162010	A	GEAR-RING S						1			

3710

MANUAL SHIFT CONTROL

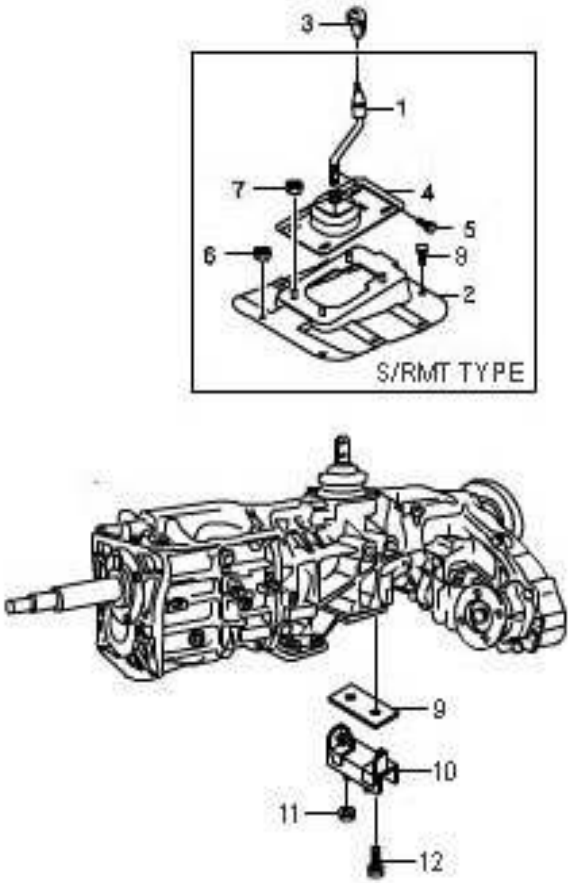

KEY NO.		PART NAME										
			ENGINE							APPLICATION		
ITC	PART NO.	T/M	G23D	G32D			OPTION	L/R	Q'TY	FROM	TO	REMARK
	[01]		LEVER A-T/M SHIFT									
	R107A-0500	M	S				&PM0.		1			
	[02]		BRKT A-T.G.S									
	31750 05A00	M	S				&PM0.		1			
	[03]		KNOB A-SHIFT LEVER									
	31730 06100	M	S				&DMP&PM0.		1			
	31730 06200	M	S				&DMI&PM0.		1			
	[04]		BOOT A-T.G.S				&PM0.					
	31760 05A90	M	S						1			
	[05]		BOLT-FLG NYLON									
	99012 08201	M	S				&PM0.		2			M8 X 1.25 X 21
	[06]		NUT-HEX FLG									
	92884 0600D	M	S				&PM0.		2			M6 X 1.1
	[07]		NUT-HEX FLG									
	92884 0800D	M	S				&PM0.		6			M8 X 1.26
	[08]		SCREW-HEX SEMS									
	98274 0620D	M	S				&PM0.		6			M6 X 1.0 X 21
	[09]		PLATE-ENG MTG RR									
	31932 05010	M	S						1			
	31932 05020	M	S						1			

3710

MANUAL SHIFT CONTROL

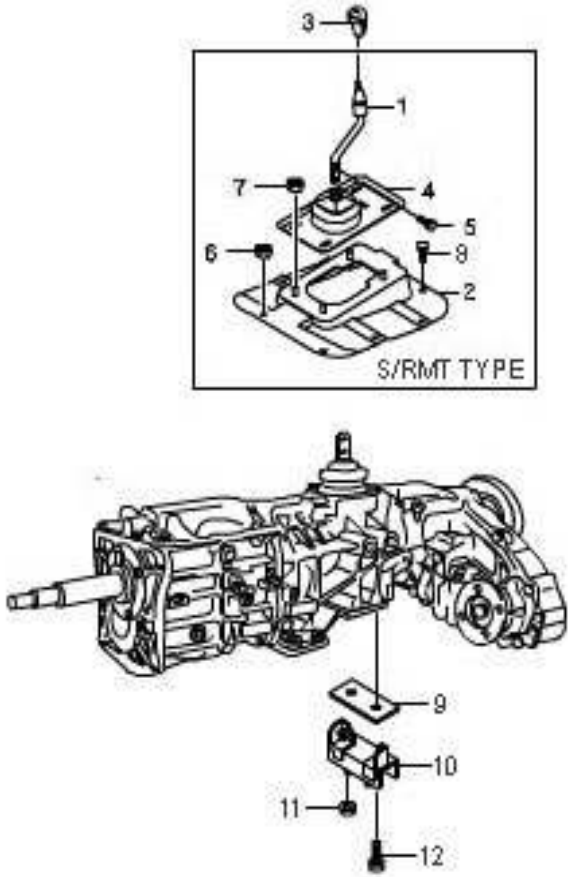

KEY NO.		PART NAME										
			ENGINE							APPLICATION		
ITC	PART NO.	T/M	G23D	G32D			OPTION	L/R	Q'TY	FROM	TO	REMARK
	[10] 31930 05000	M	INSULATOR A-ENG MTG RR S	S					1			
	[11] 92896 1000D	M	NUT-HEX FLG S						2			M10 X 1.26
	[12] 95827 1040D	M	BOLT-HEX SEMS S						2			M10 X 1.25 X 41

3740

AUTO SHIFT CONTROL

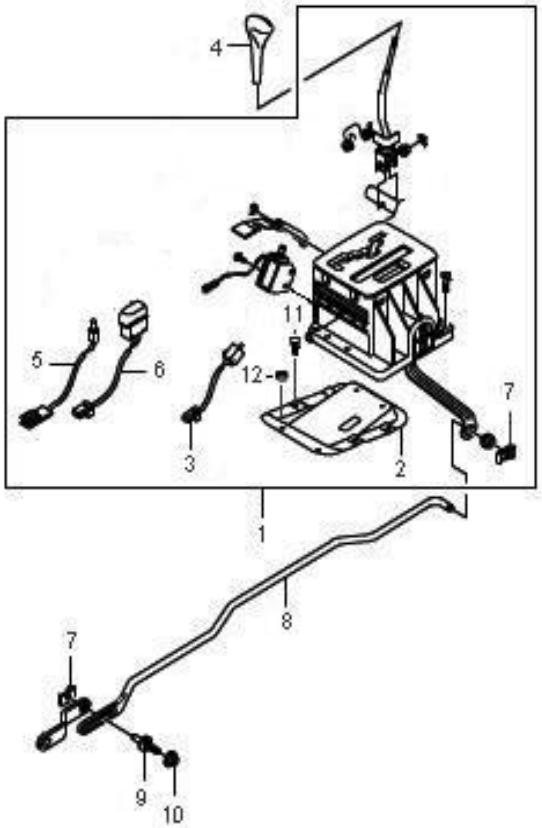

KEY NO.		PART NAME										
			ENGINE							APPLICATION		
ITC	PART NO.	T/M	G23D	G32D			OPTION	L/R	Q'TY	FROM	TO	REMARK
	[01]		LEVER A-A/T									
	R107A-0600	A	S	S			&PM1.		1			
	[02]		BRKT-A/T LEVER MTG									
	36711 05900	A	S	S			&PM1.		1			
	[03]		S/W A-"P" POSITION									
	85790 05000	A	S	S			&PM1.		1			
	[04]		KNOB A-A/T TGS (DLX)									
	36730 05A00	A	S	S			&DMP&PM1.		1			
	36730 05A10	A	S	S			&DML&PM1.		1			
	[05]		WIRING A-A/T EXTN									
	82980 05010	A	S	S			&PM1.		1			
	[06]		S/W A-P/WINT MODE SEL									
	85801 05901	A	S	S			&PM1.		1			
	[07]		CLIP									
	36790 09000	A	S	S			&PM1.		2			

3740

AUTO SHIFT CONTROL

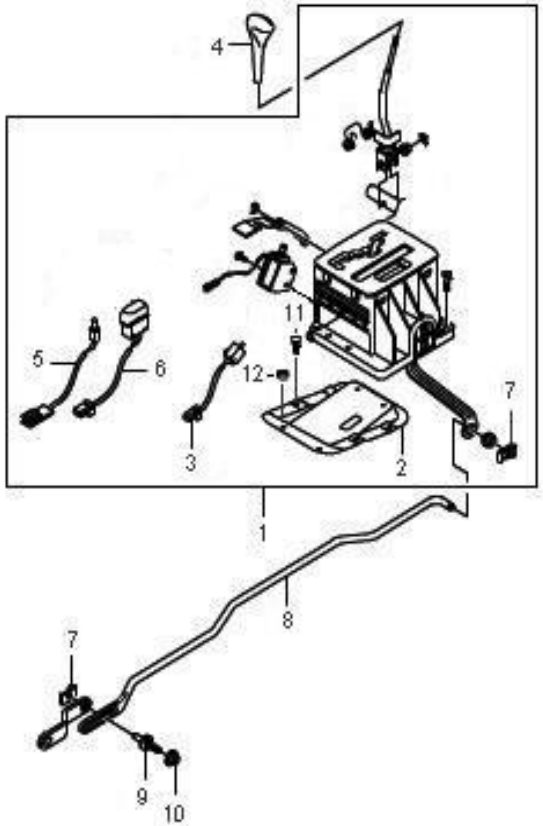

KEY NO.		PART NAME										
			ENGINE							APPLICATION		
ITC	PART NO.	T/M	G23D	G32D			OPTION	L/R	Q'TY	FROM	TO	REMARK
	[08]		ROD-A/T LEVER									
	36751 05904	A		S			&PM1.		1			
	36751 05913	A	S				&PM1.		1			
	[09]		PIN-ROD ADJUST									
	36752 05903	A	S	S			&PM1.		1			
	[10]		NUT-HEX NYLOK									
	99065 08000	A	S	S			&PM1.		1			M8 X 1.26
	[11]		SCREW-HEX SEMS									
	98274 0625D	A	S	S			&PM1.		6			M6 X 1.0 X 26
	[12]		NUT-HEX FLG									
	92884 0600D	A	S	S			&PM1.		2			M6 X 1.1

3750

AUTO COOLING SYSTEM

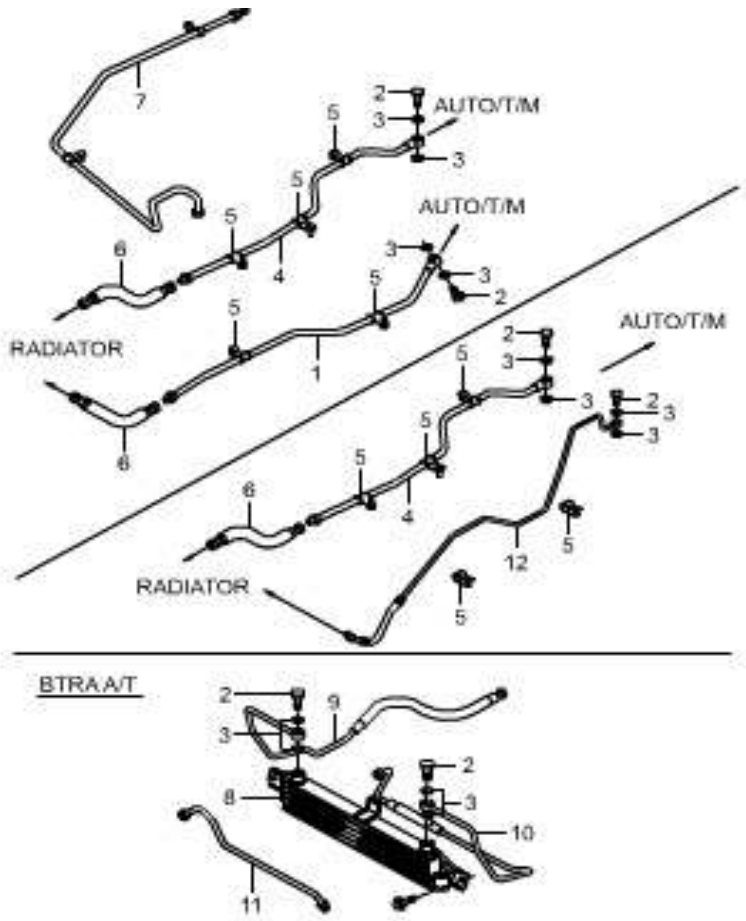

KEY NO. ITC	PART NO.	T/M	ENGINE G23D	ENGINE G32D			OPTION	L/R	Q'TY	APPLICATION FROM	APPLICATION TO	REMARK
	[02]		BOLT-EYE									
	36813 05100	A	S	S			&PM1.		4			
	[03]		WASHER									
	36814 05000	A	S	S			&PM1.		8			
	[04]		TUBE A-A/T OUTLET									
	36820 05131	A	S				&PM1.		1			
	36820 05141			S					1			
	[05]		CLIP A-TUBE MTG									
	36830 05000	A	S	S			&PM1.		1			
	[07]		TUBE A-A/T RAD									
	36850 05000	A		S			&PM1.		1			
	[08]		COOLER A-T/M									
	36890 05120	A	S	S			&PM1.		1			
	[09]		HOSE A-TUBE TO COOLER									
	36860 05130	A	S				&PM1.		1			
	36860 05140	A		S			&PM1.		1			
	[10]		HOSE A-COOLER TO RAD									
	36870 05130	A	S				&PM1.		1			

3750

AUTO COOLING SYSTEM

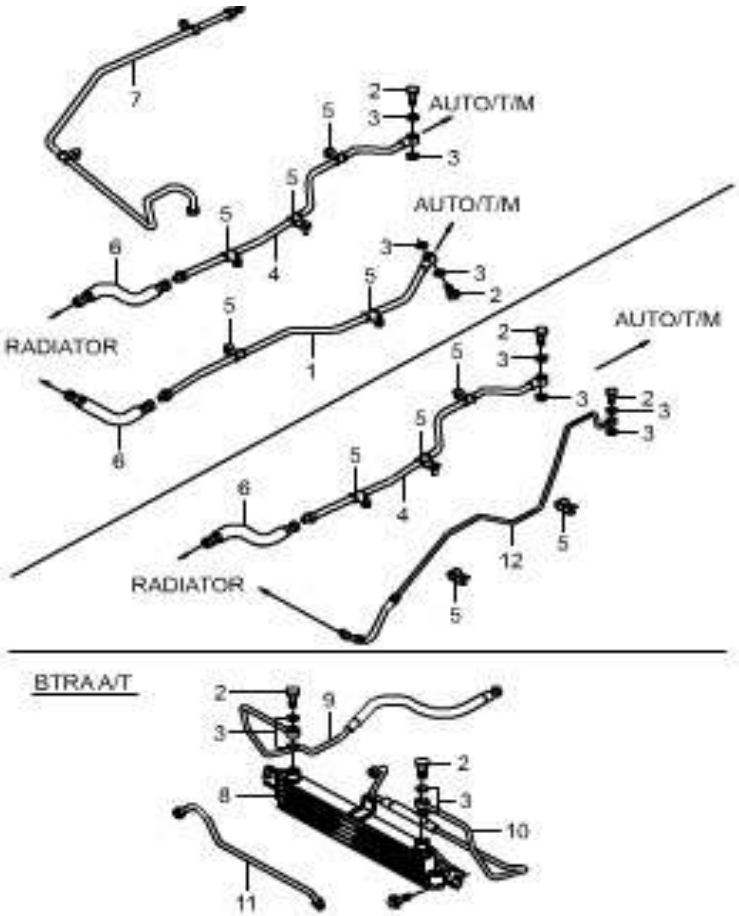

KEY NO.		PART NAME										
			ENGINE							APPLICATION		
ITC	PART NO.	T/M	G23D	G32D			OPTION	L/R	Q'TY	FROM	TO	REMARK
	[11]		TUBE A-HOSE TO RAD									
	36880 05140	A	S				&PM1.		1			
	[12]		HOSE A-A/T INLET									
	36810 05230	A	S				&PM1.		1			
	36810 05240	A	S				&PM1.		1			

4 CHASSIS

4010	FRAME
4110	AXLE SHAFT
4115	FRONT HUB & DISC
4116	LOCKING HUB
4121	FRONT AXLE
4170	TIRE & WHEEL DISC
4180	ACCESSORIES TO FRAME
4211	REAR AXLE
4310	FRONT AXLE MOUNTING
4410	FRONT SUSPENSION
4411	FRONT SHOCK ABSORBER
4420	STABILIZER BAR
4511	REAR SHOCK ABSORBER
4611	STEERING WHEEL
4613	STEERING COLUMN
4620	STEERING GEAR LINKAGE
4641	POWER STEERING PIPE LINE
4810	BRAKE PEDAL
4821	BRAKE PIPE(ABS 5.3)
4830	FRONT BRAKE
4841	REAR BRAKE(DISC)
4850	MASTER & BOOSTER CYLINDER
4890	ABS SYSTEM(5.3)
4891	HYDRAULIC MODULATOR(ABS 5.3)
4910	PARKING BRAKE

4010

FRAME

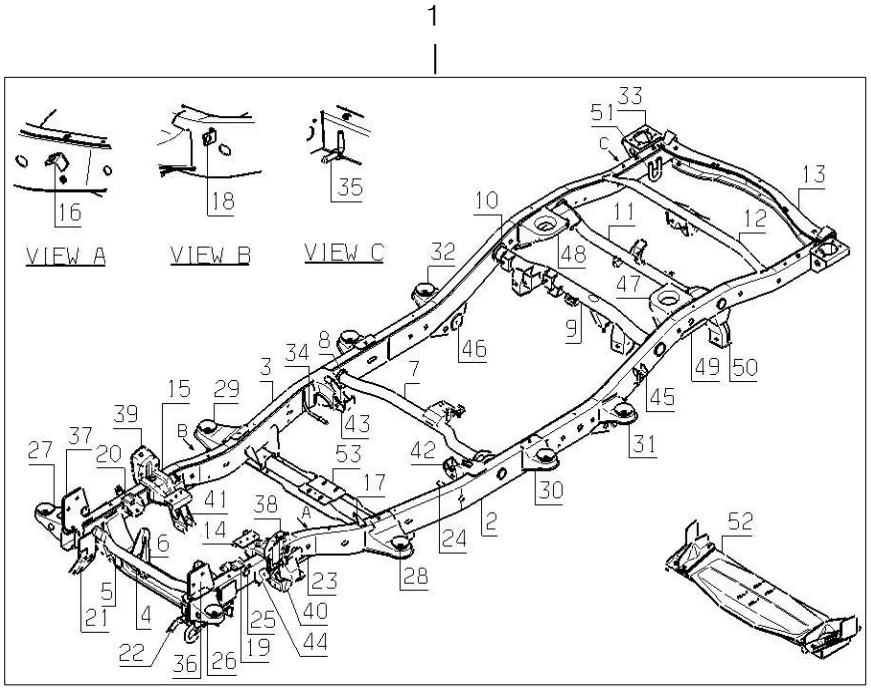

KEY NO.		PART NAME									
			ENGINE						APPLICATION		
I T C	PART NO.	T / M	G 2 3 D	G 3 2 D			OPTION	L / R	Q ' T Y	FROM	TO	REMARK
	[01] 40000 05309		FRAME A-CHASSIS S S						1			
	[02] 40010 05001		SIDE MBR A S S					L	1			
	[03] 40020 05001		SIDE MBR A S S					R	1			
	[05] 40111 05100		MBR-CROSS 2 S S						1			
	[06] 40120 05100		MBR A-CROSS 3 S S						1			
	[07] 40130 05301		MBR A-CROSS 4 S S						1			
	[08] 40132 05300		BRKT-C/MBR 3 6 SUPT S S					B	4			
	[09] 40140 05002		MBR A-CROSS 5 S S						1			
	[10] 40142 05300		BRKT-C/MBR 5 SUPT S S					B	4			
	[11] 40150 05301		MBR A-CROSS 6 S S						1			

4010

FRAME

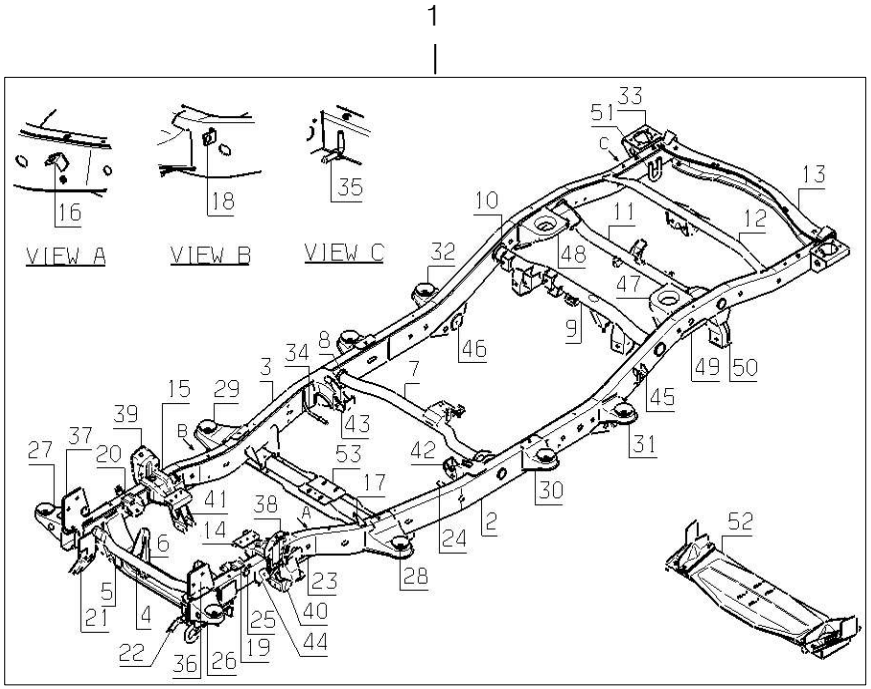

KEY NO.		PART NAME										
I T C	PART NO.	T / M	ENGINE G 2 3 D	ENGINE G 3 2 D	ENGINE	ENGINE	OPTION	L / R	Q ' T Y	APPLICATION FROM	APPLICATION TO	REMARK
	[12] 40160 05051		MBR A-CROSS 7 S	S					1			
	[13] 40170 05006		MBR A-CROSS 8 S	S					1			
	[14] 40210 05101		BRKT A-ENG MTG FRT S	S				L	1			
	[15] 40220 05101		BRKT A-ENG MTG FRT S	S				R	1			
	[17] 40241 05001		BRKT-3 WAY CONNECTOR MTG S	S				L	1			
	[18] 40242 05001		BRKT-3 WAY CONNECTOR MTG S	S				R	1			
	[19] 40270 05000		BRKT A-FRT AXLE MTG FRT S	S				L	1			
	[20] 40280 05000		BRKT A-FRT AXLE MTG FRT S	S				R	1			
	[21] 40310 05001		HOOK A-FRT LASHING S	S				R	1			
	[22] 40330 05001		HOOK A-FRT TOW S	S				L	1			

4010

FRAME

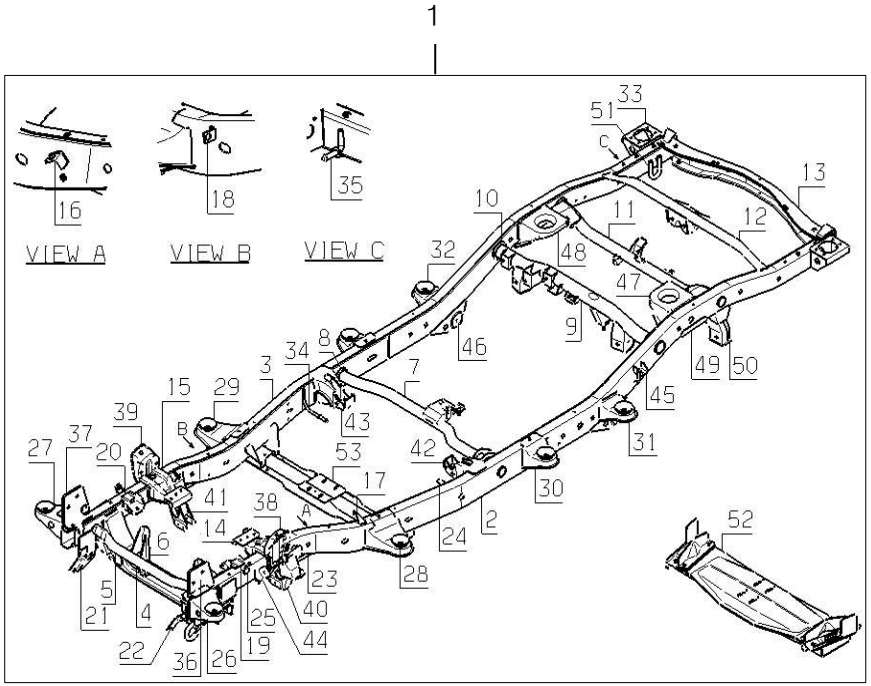

KEY NO. ITC	KEY NO. PART NO.	T/M	ENGINE G23D	ENGINE G32D			OPTION	L/R	Q'TY	APPLICATION FROM	APPLICATION TO	REMARK
	[23] 40345 05000		S	S			REINF-LWR ARM MTG	B	2			
	[24] 40350 05100		S	S			PLATE A-TUBE MTG		1			
	[25] 40371 05301		S	S			BRKT-HOSE MTG FRT	B	2			
	[26] 40460 05000		S	S			BRKT A-BODY MTG 2	L	1			
	[27] 40470 05000		S	S			BRKT A-BODY MTG 2	R	1			
	[28] 40420 05002		S	S			BRKT A-BODY MTG 3	L	1			
	[29] 40490 05002		S	S			BRKT A-BODY MTG 3	R	1			
	[30] 40430 05000		S	S			BRKT A-BODY MTG 4	B	2			
	[31] 40440 05001		S	S			BRKT A-BODY MTG NO.5	L	1			

4010

FRAME

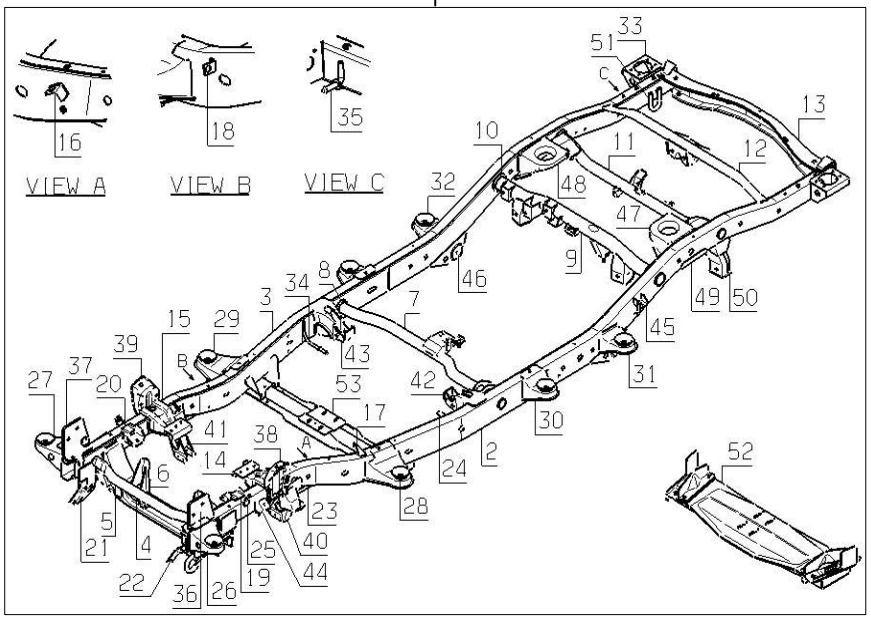

KEY NO. ITC	PART NO.	T/M	ENGINE G23D	ENGINE G32D			OPTION	L/R	Q'TY	APPLICATION FROM	APPLICATION TO	REMARK
	[32] 40480 05001		S	S			BRKT A-BODY MTG NO.5	R	1			
	[33] 40450 05000		S	S			BRKT A-BODY MTG NO.6	B	2			
	[34] 40540 05400		S	S			ROD-MUFR MTG		1			
	[35] 40551 05301		S	S			ROD-EXH FRT MTG		1			
	[36] 40560 05002		S	S			BRKT A-FRT BUMPER MTG	L	1			
	[37] 40570 05002		S	S			BRKT A-FRT BUMPER MTG	R	1			
	[38] 40607 05101		S	S			BRKT A-FRT UPR ARM MTG	L	1			
	[39] 40608 05101		S	S			BRKT A-FRT UPR ARM MTG	R	1			
	[40] 40630 05000		S	S			BRKT SUB A-L/ARM MTG RR	L	1			

4010

FRAME

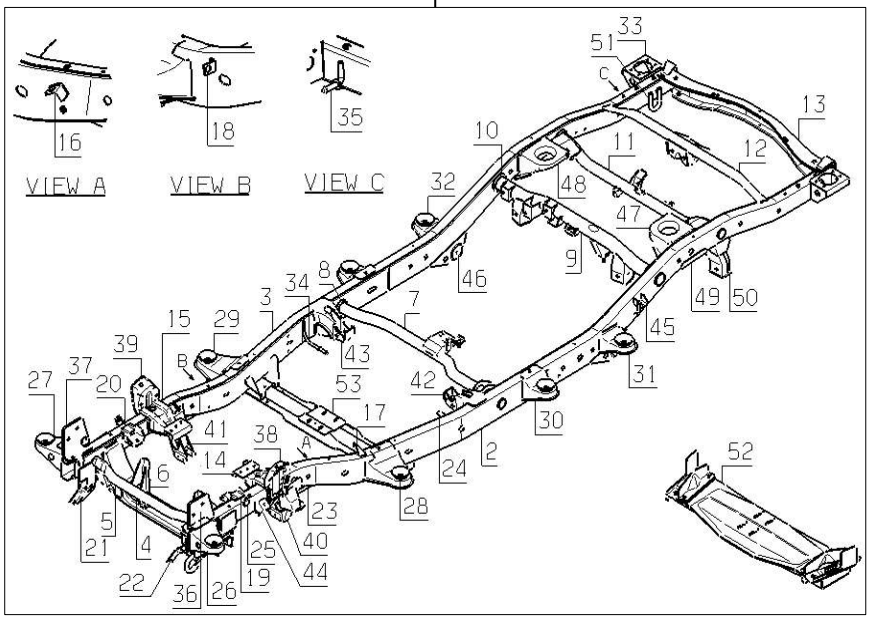

KEY NO.		PART NAME										
I T C	PART NO.	T / M	ENGINE G 2 3 D	ENGINE G 3 2 D	ENGINE	ENGINE	OPTION	L / R	Q ' T Y	APPLICATION FROM	APPLICATION TO	REMARK
	[41] 40640 05000		S	S				R	1			
	[42] 40650 05001		S	S				L	1			
	[43] 40660 05100		S	S				R	1			
	[44] 40670 05100		S	S				L	1			
	40680 05100		S	S				R	1			
	[45] 40701 05100		S	S				L	1			
	40702 05100		S	S				R	1			
	[46] 40711 05000		S	S				B	2			
	[47] 40720 05302		S	S				L	1			
	[48] 40730 05302		S	S				R	1			

[41] BRKT SUB A-L/ARM MTG RR
[42] BRKT A-H/CTRL ARM MTG
[43] BRKT A-H/CTRL ARM MTG
[44] BRKT A-REBOUND STOPPER
[45] BRKT A-STAB/BAR TO FRAME
[46] BRKT-LWR ARM TO FRAME OTR
[47] BRKT A-SPRG & S/ABS MTG
[48] BRKT A-SPRG & S/ABS MTG

4010

FRAME

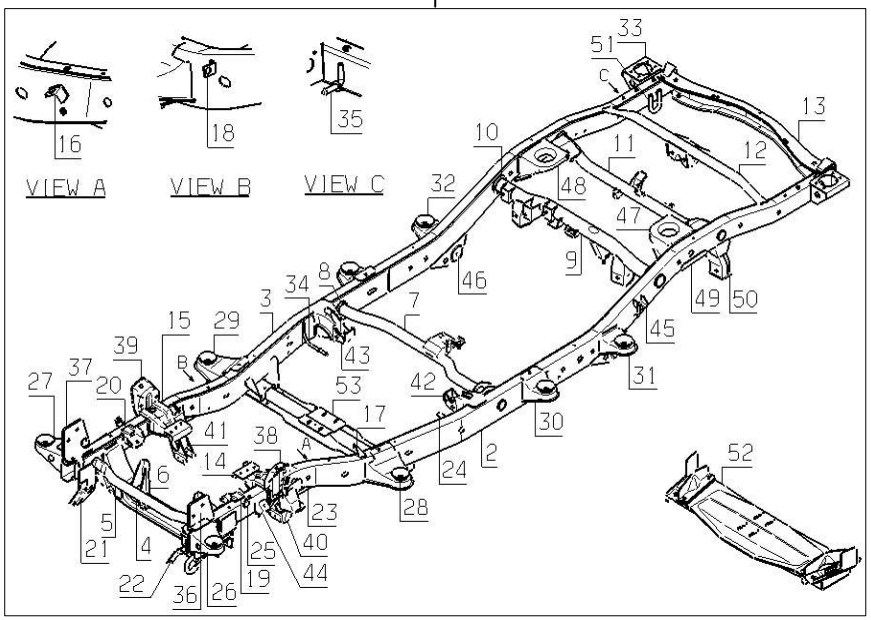

KEY NO. ITC	PART NO.	T/M	ENGINE G23D	ENGINE G32D			OPTION	L/R	Q'TY	APPLICATION FROM	APPLICATION TO	REMARK
	[49]		BRKT A-BUMPER MTG									
	40740 05010		S	S				L	1			
	40740 05020		S	S				R	1			
	[50]		BRKT A-LATERAL ROD MTG									
	40760 05300			S				L	1			
	[51]		HOOK-LASHING									
	40828 01000			S				B	2			
	[52]		MBR A2-ENG MTG RR CROSS									
	R102B-0030			S					1			

4110

AXLE SHAFT

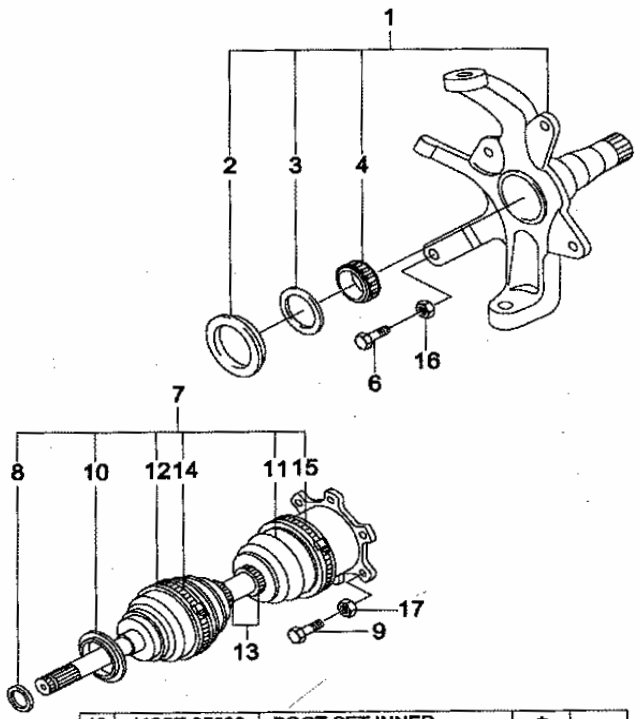

18	413ST-05000	BOOT SET INNER	*	
19	413ST-05010	BOOT SET OUTER		*
		CIRCULAR CIRCLIP	1	1
		SNAP RONG	1	1
11	41331-05000	D.O. J BOOT	1	
12	41332-05000	D.J BOOT		1
14	41334-05000	BOOT CLAMP		1
15	41335-05000	BOOT CLAMP	1	1
13	41333-05000	BOOT CLAMP	1	2
		GREASE PACKAGE		1
		GREASE PACKAGE	1	1

KEY NO.		PART NAME										
			ENGINE							APPLICATION		
ITC	PART NO.	T/M	G23D	G32D			OPTION	L/R	Q'TY	FROM	TO	REMARK
	[07]		SHAFT ASSY-FRT AXL									
	41300 05101		S	S					2			
	[08]		SHIM									
	41310 05100		S	S					2			0.1T
	41310 05200		S	S					2			0.2T
	41310 05210		S	S					2			0.3T
	41310 05220		S	S					2			0.5T
	41310 05230		S	S					2			1.0T
	[09]		BOLT									
	41320 05000		S	S					12			M10X1.25
	[10]		SEAL-DUST,FRT AXLE SHAFT									
	41374 01800		S	S					2			
	[11]		BOOT									
	41331 05000		S	S					2			
	[12]		BOOT									
	41332 05000		S	S					2			
	[13]		BAND-BOOT									
	41333 05000		S	S					2			
	[14]		BAND-BOOT									
	41334 05000		S	S					2			

4110

AXLE SHAFT

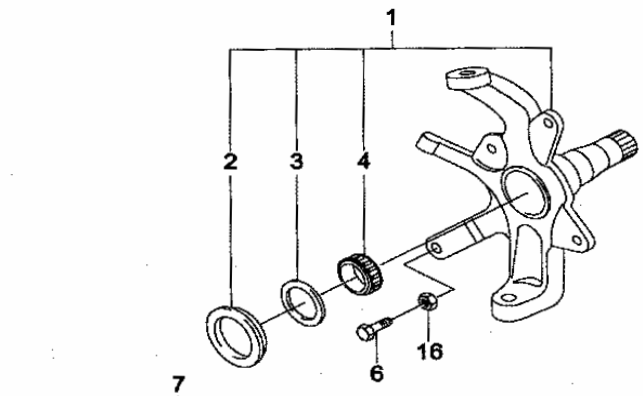

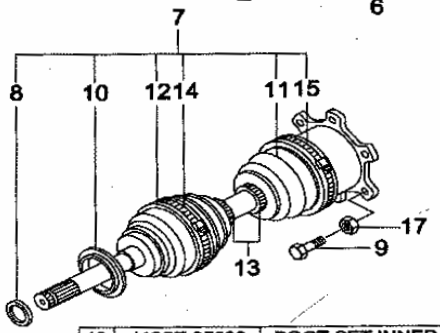

18	413ST-05000	BOOT SET INNER	*	
19	413ST-05010	BOOT SET OUTER		*
		CIRCULAR CIRCLIP	1	1
		SNAP RONG	1	1
11	41331-05000	D.O. J BOOT	1	
12	41332-05000	D.J BOOT		1
14	41334-05000	BOOT CLAMP		1
15	41335-05000	BOOT CLAMP	1	1
13	41333-05000	BOOT CLAMP	1	2
		GREASE PACKAGE		1
		GREASE PACKAGE	1	1

KEY NO.		PART NAME										
			ENGINE							APPLICATION		
I T C	PART NO.	T / M	G 2 3 D	G 3 2 D			OPTION	L / R	Q ' T Y	FROM	TO	REMARK
	[15] 41335 05000		BAND-BOOT S	S					2			
	[17] 93310 1000D		WASHER S	S					12			M10
	[18] 413ST 05401		BOOT SET-INNER S	S					2			
	[19] 413ST 05411		BOOT SET-OUTER S	S					2			

4115

FRONT HUB & DISC

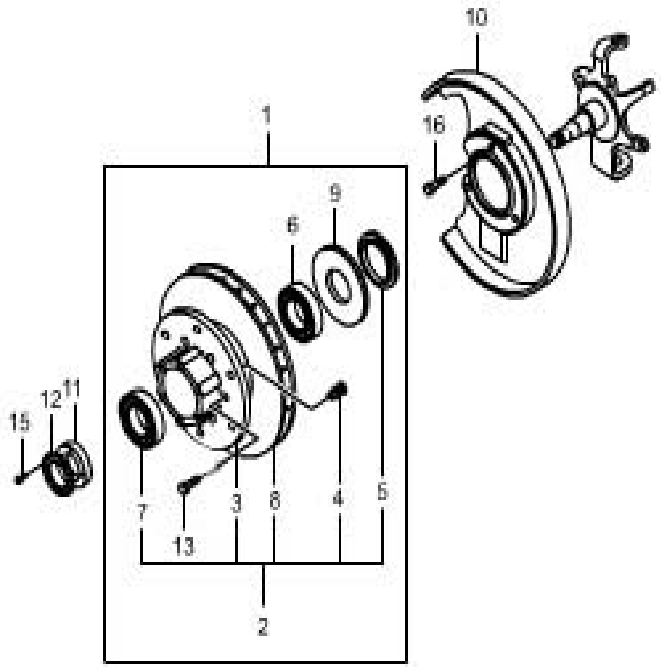

KEY NO.		PART NAME										
			ENGINE							APPLICATION		
ITC	PART NO.	T/M	G23D	G32D			OPTION	L/R	Q'TY	FROM	TO	REMARK
	[01] 41410 05106		HUB & DISC A-FRT S	S					2			
	[02] 41420 05002		HUB A-FRT S	S					2			
	[03] 41421 05000		HUB WHEEL-FRT S	S					2			
	[04] 41423 08100		PIN-FRT HUB WHEEL S	S					12			
	[05] 41425 08000		SEAL-FRT HUB OIL S	S					2			
	[06] 41431 03210		BEARING A-FRT HUB INR S	S					2			
	[07] 41432 03210		BEARING A-FRT HUB OTR S	S					2			
	[08] 41441 06212		DISC-BRAKE,FRT S	S					2			
	[09] 48941 05000		WHEEL-ABS FRT TOOTH S	S					2			

4115

FRONT HUB & DISC

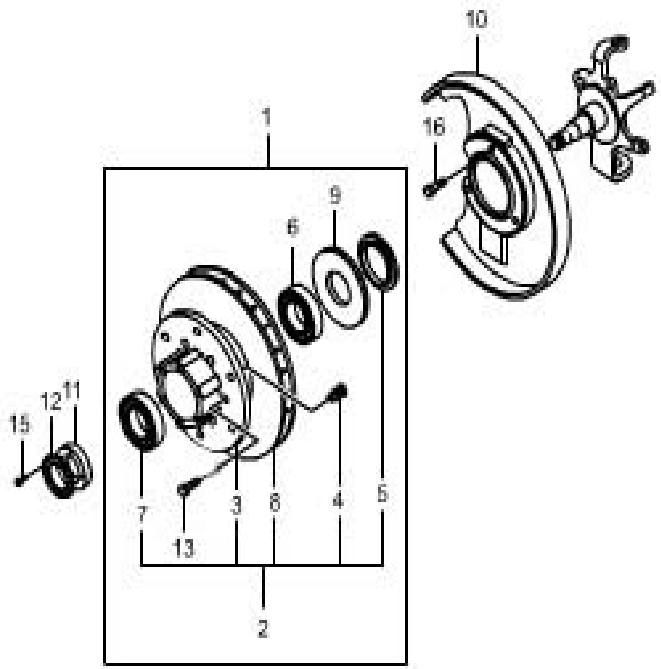

KEY NO.		PART NAME										
			ENGINE							APPLICATION		
ITC	PART NO.	T/M	G23D	G32D			OPTION	L/R	Q'TY	FROM	TO	REMARK
	[10]		SHIELD-DUST BRK FRT									
	41451 05000		S	S				L	1			
	41461 05000		S	S				R	1			
	[11]		NUT-ADJUST WHEEL HUB									
	41531 08000		S	S					2			
	[12]		WASHER-LOCK HUB									
	41532 05000		S	S					2			
	[13]		BOLT-HEX SEMS									
	95767 1235D		S	S					12			M12 X 1.25 X 36
	[15]		USE 93684-40082,SCREW									
	93674 40081		S	S					6			
	[16]		SCREW-HEX SEMS									
	98274 0612D		S	S					6			M6 X 1.0 X 13

4116

LOCKING HUB

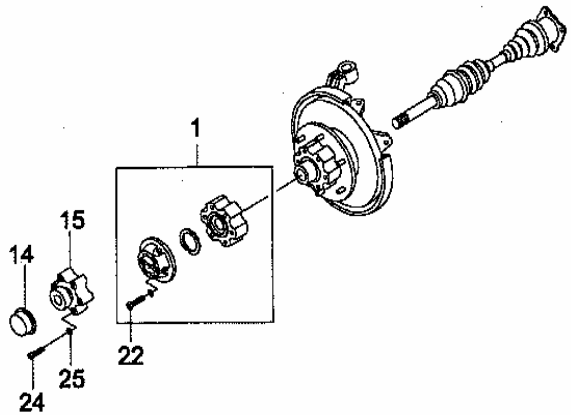

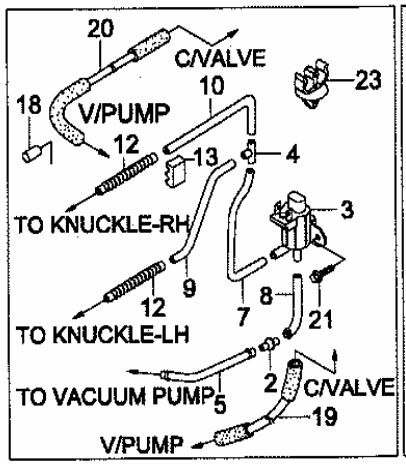

~ 9501
9512 ~

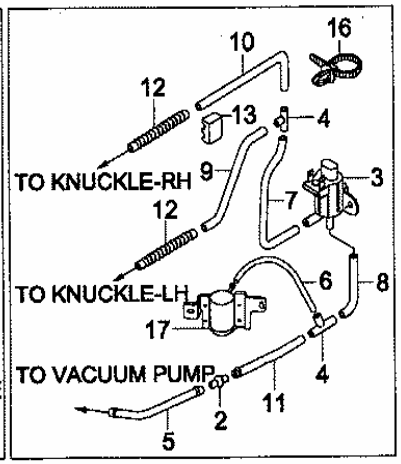

9502 ~ 9511

KEY NO.		PART NAME										
			ENGINE							APPLICATION		
ITC	PART NO.	T/M	G23D	G32D			OPTION	L/R	Q'TY	FROM	TO	REMARK
	[01] 41510 05102		HUB ASSY-AUTO.VAC LOCKING S	S					2			
	[22] 41511 05101		BOLT-LOCKING HUB MTG S	S					12			

4121

FRONT AXLE

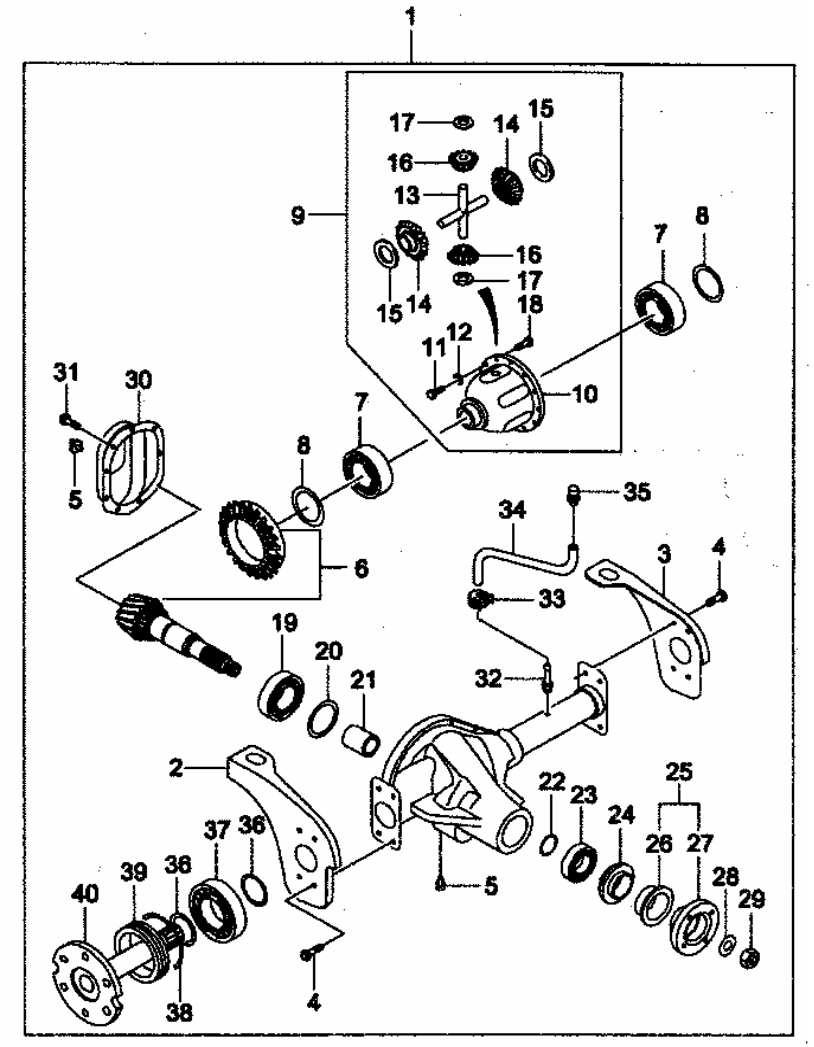

KEY NO.		PART NAME										
			ENGINE							APPLICATION		
I T C	PART NO.	T / M	G 2 3 D	G 3 2 D			OPTION	L / R	Q ' T Y	FROM	TO	REMARK
	[01]		AXLE ASSY-FRT									
	PB03A-1501	M	S						1			4.55R
	PB03A-1501	A		S					1			4.55R
	PB03A-1505	A	S						1			5.86R
	[02]		BRKT A-FRT AXLE MTG,LH									
	PB03A-5508							L	1			
	PB03A-5511		S	S				L	1			
	[03]		BRKT A-FRT AXLE MTG,RH									
	PB03A-5514							R	1			
	PB03A-5517		S	S				R	1			
	[04]		BOLT ASSY									
	PB03A-5521		S	S					8			M12X1.25
	[05]		PLUG-FILLER&DRAIN									
	PA04A-0083		S	S					2			
	[06]		GEAR SET-R/P									
	PB03A-2801	M	S						1			4.55R
	PB03A-2801	A		S					1			4.55R
	PB03A-2813	A	S						1			5.86R
	[07]		BRG.-DIFF SIDE									
	PB03A-2710		S	S					2			

4121

FRONT AXLE

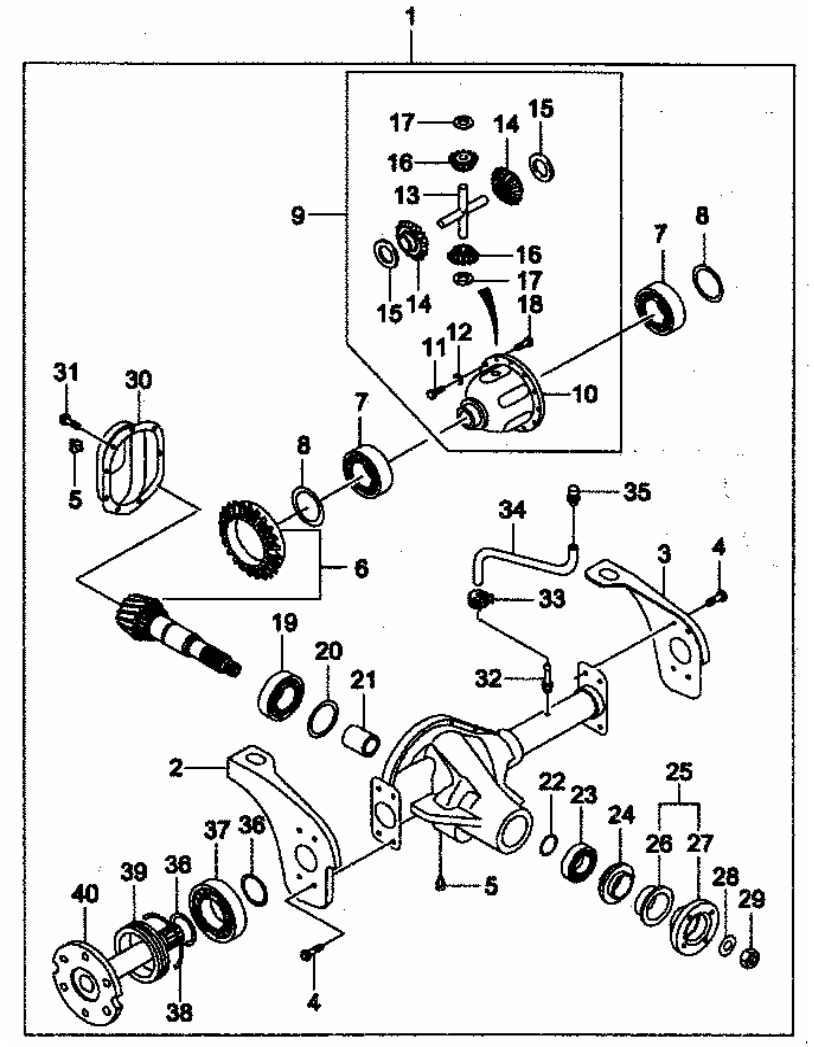

KEY NO.		PART NAME										
			ENGINE							APPLICATION		
I T C	PART NO.	T / M	G 2 3 D	G 3 2 D			OPTION	L / R	Q ' T Y	FROM	TO	REMARK
	[08] PB03A-2711		SHIM-DIFF SIDE BRG. S	S					2			
	[09] PB03A-2701		DIFF. ASSY S	S					1			
	[10] PB03A-2702		CASE-DIFF. S	S					1			
	[11] PB03A-2708		PIN-SPRING S	S					1			
	[13] PB03A-2707		SHAFT-DIFF PINION S	S					1			
	[14] PB03A-2705		GEAR-DIFF SIDE S	S					2			T=14
	[15] PB03A-2703		WASHER-DIFF SIDE THRUST S	S					2			
	[16] PB03A-2706		GEAR-DIFF PINION S	S					2			T=10
	[17] PB03A-2704		WASHER-DIFF PINION S	S					2			

4121

FRONT AXLE

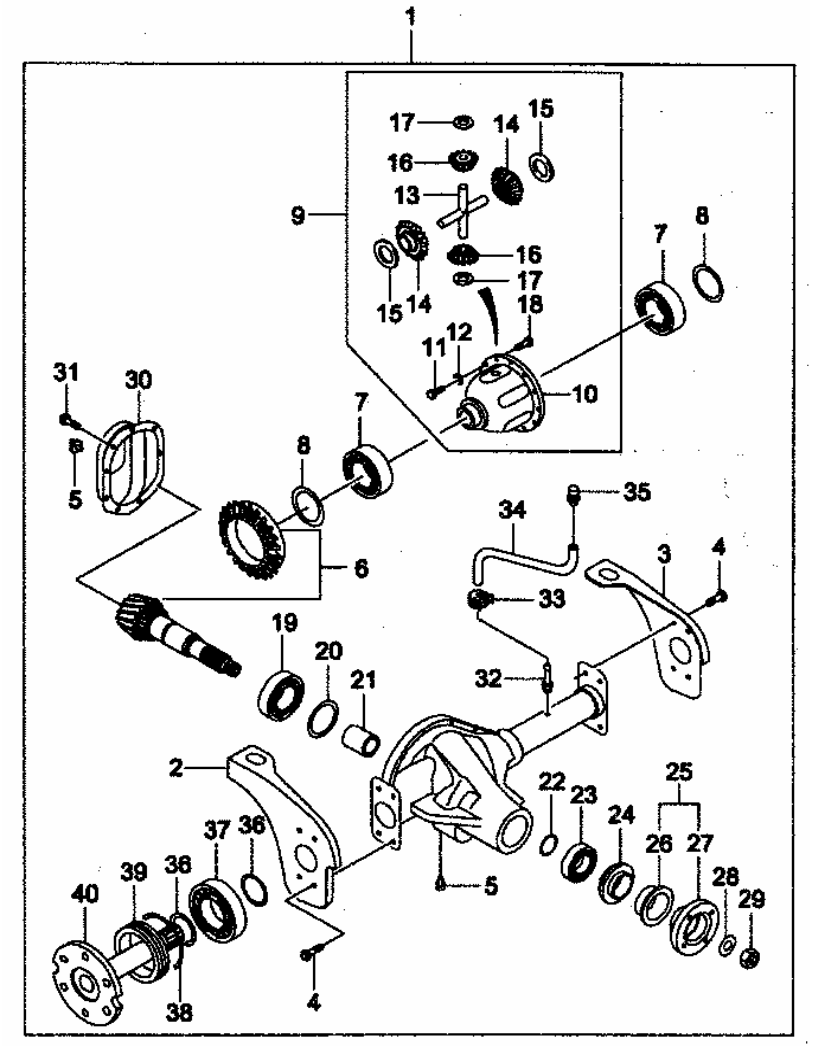

KEY NO.		PART NAME										
			ENGINE							APPLICATION		
I T C	PART NO.	T / M	G 2 3 D	G 3 2 D			OPTION	L / R	Q ' T Y	FROM	TO	REMARK
	[18] PB03A-2709		BOLT-RING GEAR S	S					10			
	[19] PB03A-2605		BRG.-PINION,INNER S	S					1			
	[20] PB03A-2712		SHIM-PINION BRG.INNER S	S					1			
	[21] PB03A-2606		SPACER S	S					1			
	[22] PB03A-2607		SHIM-PINION BRG. OUTER S	S					1			
	[23] PB03A-2608		BRG-PINION.OUTER S	S					1			
	[24] PB03A-2609		OIL SEAL-COMP FLANGE S	S					1			
	[25] PB03A-2610		FLANGE ASSY-COMPANION S	S					1			
	[26] PB03A-2612		COVER-COMP FLANGE S	S					1			

4121

FRONT AXLE

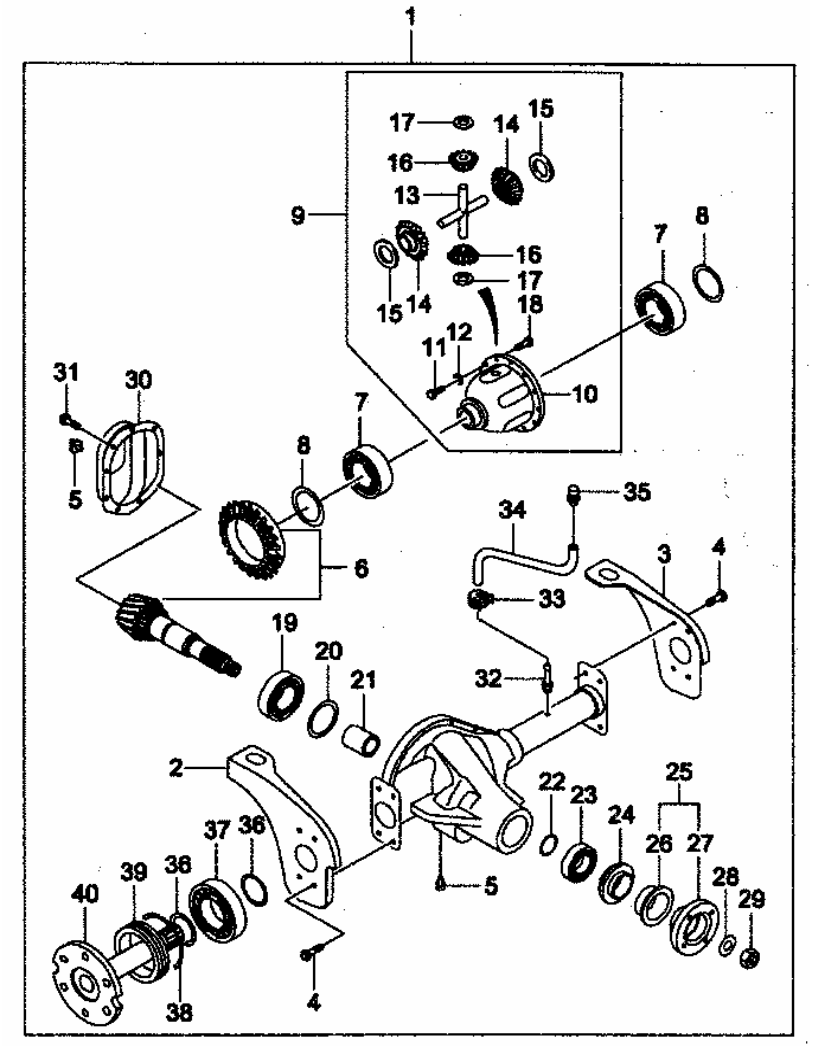

KEY NO.		PART NAME										
			ENGINE							APPLICATION		
I T C	PART NO.	T / M	G 2 3 D	G 3 2 D			OPTION	L / R	Q ' T Y	FROM	TO	REMARK
	[27]		FLANGE-COMPANION									
	PB03A-2611		S	S					1			
	[29]		NUT-PINION									
	PB04A-2309		S	S					1			
	[30]		COVER ASSY-CARRIER									
	PB03A-5501	M	S	S					1			STEEL
	PB03A-5504	A	S						1			AL
	[31]		BOLT-CARRIER COVER									
	PB03A-5505	M	S	S					8			
	PB04A-5003	A	S						8			
	[32]		CONNECTOR-AIR VENT,FRT									
	PB04A-5015		S	S					1			
	[33]		CLAMP-AIR VENT									
	PB04A-5019		S	S					1			
	[34]		HOSE-AIR VENT									
	PB03A-5524		S	S					1			
	[35]		AIR BREATHER ASSY									
	PB04A-5018		S	S					1			
	[36]		RING-SNAP									
	PB03A-3507		S	S					4			

4121

FRONT AXLE

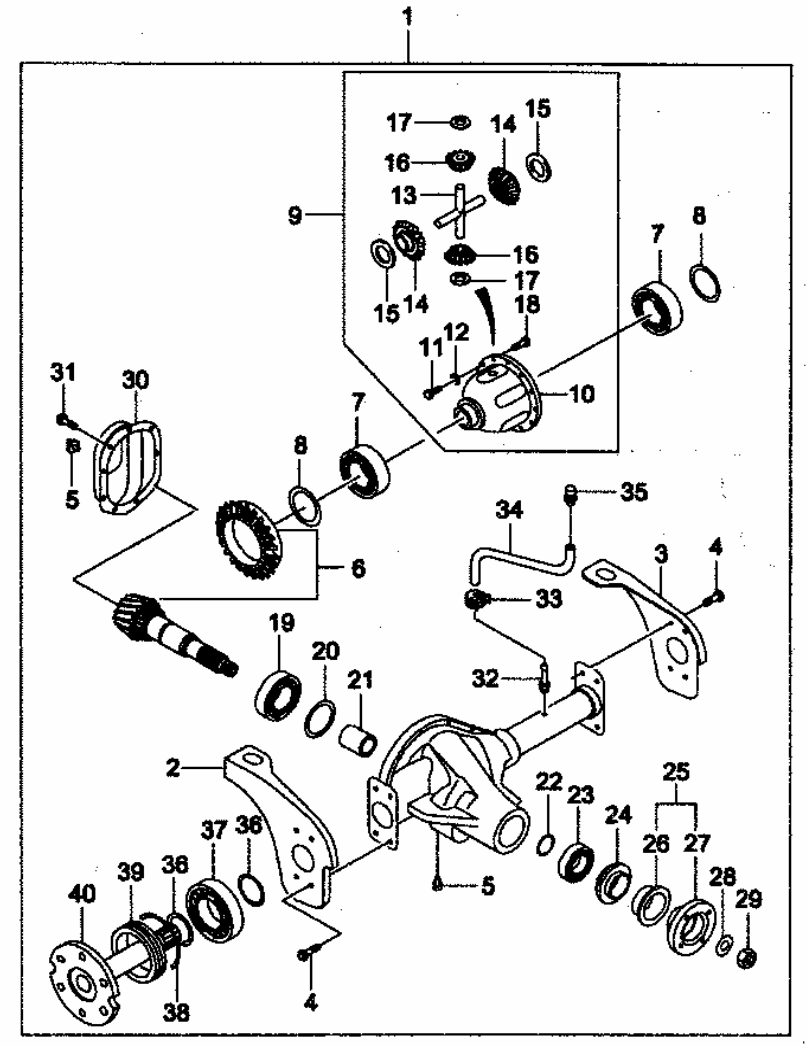

KEY NO.		PART NAME									
			ENGINE						APPLICATION		
I T C	PART NO.	T / M	G 2 3 D	G 3 2 D			OPTION	L / R	Q ' T Y	FROM	TO	REMARK
	[37]		BEARING-HUB									
	PB03A-3505		S	S					2			
	[38]		PACKING-O RING									
	PB03A-3506		S	S					2			
	[39]		OIL SEAL-HUB									
	PB03A-5520		S	S					2			
	[40]		SHAFT-AXLE									
	PB03A-3503		S	S				L	1			
	PB03A-3504		S	S				R	1			

4170

TIRE & WHEEL DISC

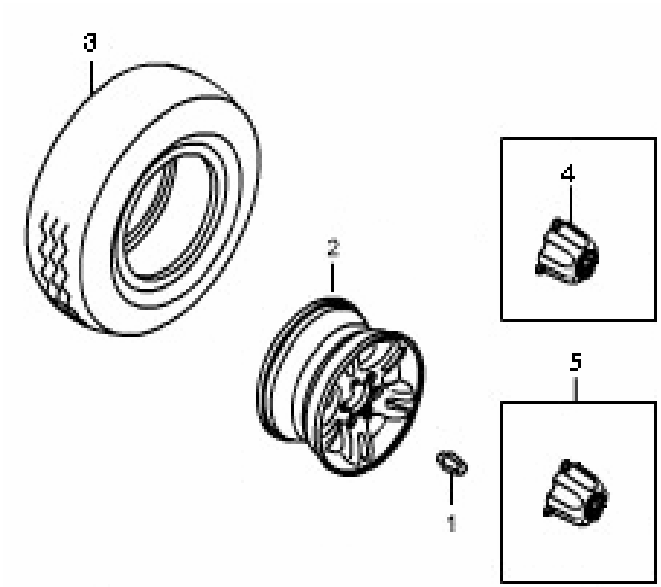

KEY NO.		PART NAME										
			ENGINE							APPLICATION		
ITC	PART NO.	T/M	G23D	G32D			OPTION	L/R	Q'TY	FROM	TO	REMARK
	[01]		NUT-WHL									
	41735 03011		S	S					24			M12 X 1.6
	[02]		ALLOY WHL									
	41730 06530		S	S			&WAA.		5			
	41730 06540		S	S			&WAA.		5			
	41730 06620		S	S			&WAA.		5			
	[03]		TIRE									
	41712 08210		S	S			&WAA&WUA.		5			
	41712 08220		S	S			&WAA&WUA.		5			
	41712 08240		S	S			&WAA&WUA.		5			
	[04]		CAP A-HUB FRT(SUS-EXP)									
	41770 06123		S	S			&WBR.		2			
	[05]		CAP A-HUB RR(SUS-EXP)									
	41780 06123		S	S			&WBR.		2			

4180

ACCESSORIES TO FRAME

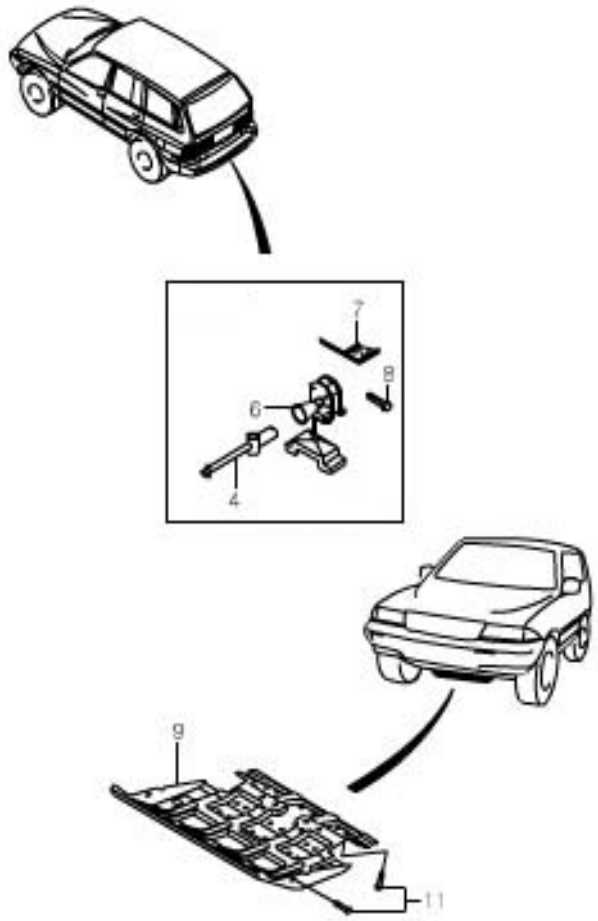

KEY NO.		PART NAME										
			ENGINE							APPLICATION		
ITC	PART NO.	T/M	G23D	G32D			OPTION	L/R	Q'TY	FROM	TO	REMARK
	[04]		HANDLE A-S/TIRE MTG									
	40830 32000		S	S					1			
	[06]		WINCH A-S/TIRE									
	40840 08000		S	S					1			
	[07]		STOPPER-S/TIRE									
	40855 05051		S	S				L	1			
	40856 05051		S	S				R	1			
	[08]		BOLT-HEX SEMS									
	95817 0825D		S	S					6			M8 X 1.25 X 26

4211

REAR AXLE

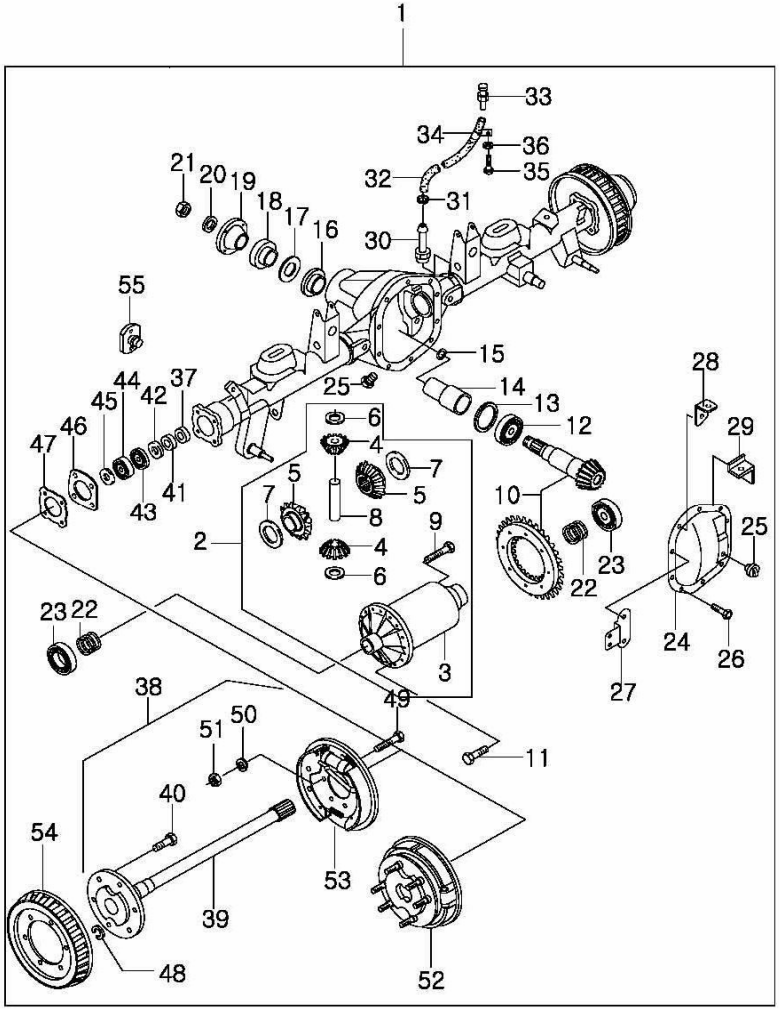

KEY NO.		PART NAME									
			ENGINE						APPLICATION		
I T C	PART NO.	T / M	G 2 3 D	G 3 2 D			OPTION	L / R	Q ' T Y	FROM	TO	REMARK
	[01]		AXLE ASSY-RR									
	PB04A-1006	M	S						1			4.55R
	PB04A-1006	A		S					1			4.55R
	PB04A-1026	M	S				LSD		1			4.55R
	PB04A-1026	A		S			LSD		1			4.55R
	PB04A-1005	A	S						1			5.86R
	PB04A-1025	A	S				LSD		1			5.86R
	[02]		DIFFERENTIAL ASSY									
	PB04A-2201	A	S	S					1			
	PB04A-2201	M	S						1			
	PB04A-2203	A	S	S			LSD		1			
	PB04A-2203	M	S				LSD		1			
	PB04A-2205	A	S	S			LSD		1			
	PB04A-2205	M	S				LSD		1			
	[03]		CASE-DIFF									
	PB04A-2301	A	S	S					1			
	PB04A-2301	M	S						1			
	[04]		GEAR-DIFF. PINION									
	PB04A-2303		S	S					2			T=10
	[05]		GEAR-DIFF SIDE									
	PA04A-0056		S	S					2			T=16
	[06]		WASHER THRUST-DIFF.PINION									
	PB04A-2305		S	S					2			

4211

REAR AXLE

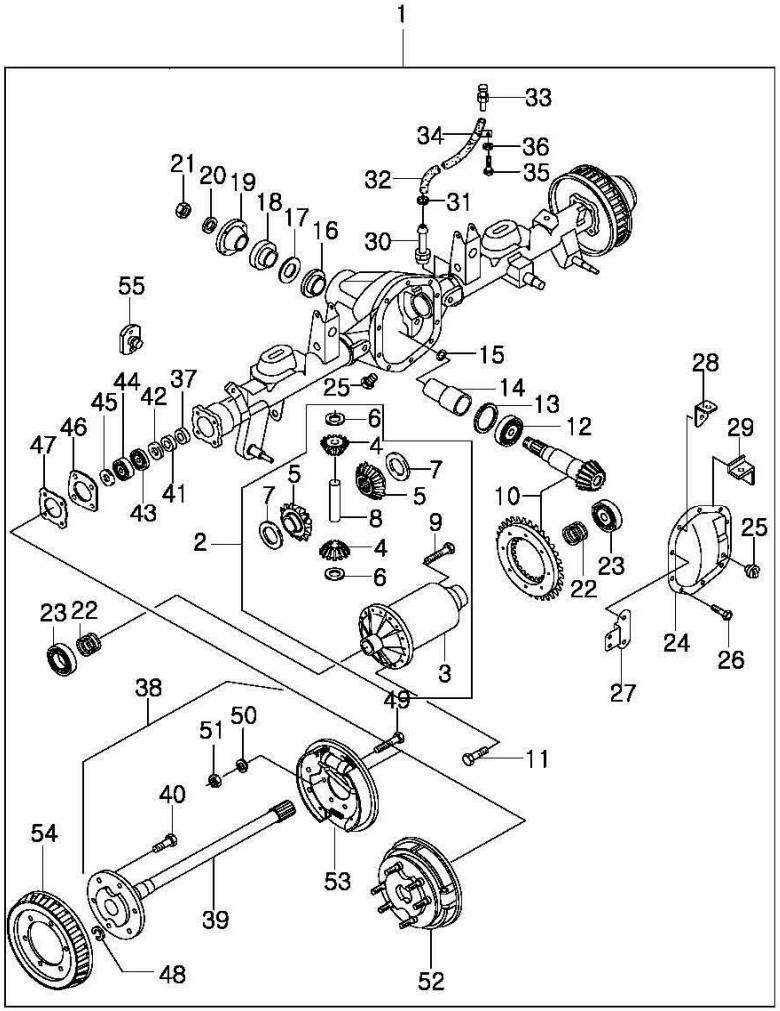

KEY NO.		PART NAME										
			ENGINE							APPLICATION		
I T C	PART NO.	T / M	G 2 3 D	G 3 2 D			OPTION	L / R	Q ' T Y	FROM	TO	REMARK
	[07]		WASHER THRUST-SIDE GEAR									
	PA04A-0059		S	S					2			
	[08]		SHAFT-DIFF PINION									
	PB04A-2304		S	S					1			
	[09]		PIN-SPRING									
	PB04A-2306		S	S					1			
	[10]		GEAR-SET-R/P									
	PB04A-2101	A		S					1			4.55R
	PB04A-2101	M	S						1			4.55R
	PB04A-2113	A	S						1			5.86R
	[12]		BRG.-PINION,INNER									
	PA04A-0033		S	S					1			
	[13]		SHIM-PINION BRG.INNER									
	PA04A-0035		S	S					1			
	[14]		SPACER									
	PA04A-0022		S	S					1			
	[15]		SHIM-PINION BRG. OUTER									
	PA04A-0023		S	S					1			
	[16]		BRG-PINION.OUTER									
	PA04A-0032		S	S					1			

4211

REAR AXLE

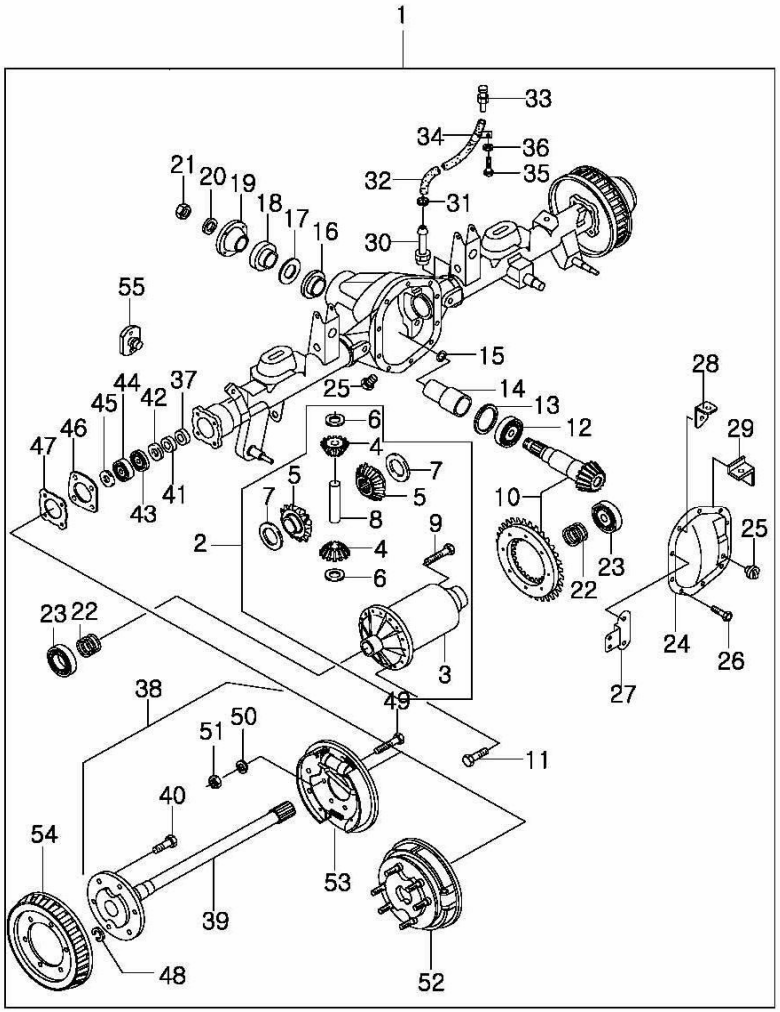

KEY NO. ITC	PART NO.	T/M	ENGINE G23D	ENGINE G32D			OPTION	L/R	Q'TY	APPLICATION FROM	APPLICATION TO	REMARK
	[17]		OIL SLINGER									
	PA04A-0031		S	S					1			
	[18]		OIL SEAL-COMP. FLANGE									
	PB04A-2308		S	S					1			
	[19]		FLANGE-COMPANION									
	PA04A-0024		S	S					1			
	[21]		NUT-PINION									
	PB04A-2309		S	S					1			
	[22]		SHIM-DIFF. SIDE									
	PA04A-0069		S	S					2			
	PA04A-2311		S	S			LSD		2			
	[23]		BRG-DIFF. SIDE									
	PA04A-0068		S	S					2			
	PB04A-2310		S	S			LSD		2			
	PB04A-2312		S	S			LSD		2			
	[24]		COVER -CARRIER									
	PB04A-5001		S	S					1			AL
	[25]		PLUG-FILLER/DRAIN									
	PA04A-0083		S	S					2			

4211

REAR AXLE

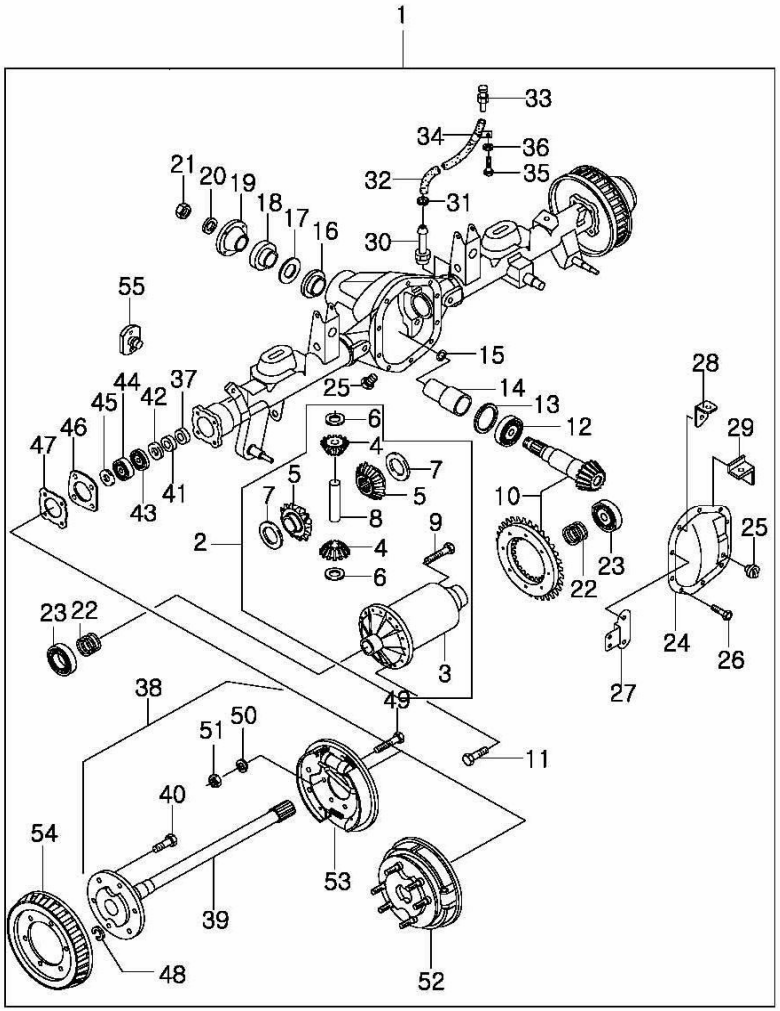

KEY NO.		PART NAME										
I T C	PART NO.	T / M	ENGINE G 2 3 D	ENGINE G 3 2 D	ENGINE	ENGINE	OPTION	L / R	Q ' T Y	APPLICATION FROM	APPLICATION TO	REMARK
	[26] PB04A-5003		BOLT-CARRIER COVER S	S								
	[28] PB04A-5006		BRKT ASSY-3WAY CON MTG,RR S	S					1			
	[29] PB04A-5009		BRKT ASSY-2WAY CON MTG,RR S	S					1			
	[30] PB04A-5015		CONNECTOR S	S					1			
	[31] PB04A-5019		CLAMP-AIR VENT S	S					1			
	[32] PB04A-5016		HOSE-AIR VENT S	S					1			
	[33] PB04A-5018		AIR BREATHER ASSY S	S					1			
	[34] PB04A-5017		CLIP-AIR VENT HOSE S	S					1			
	[35] PB04A-5020		BOLT-FLANGE S	S					1			

4211

REAR AXLE

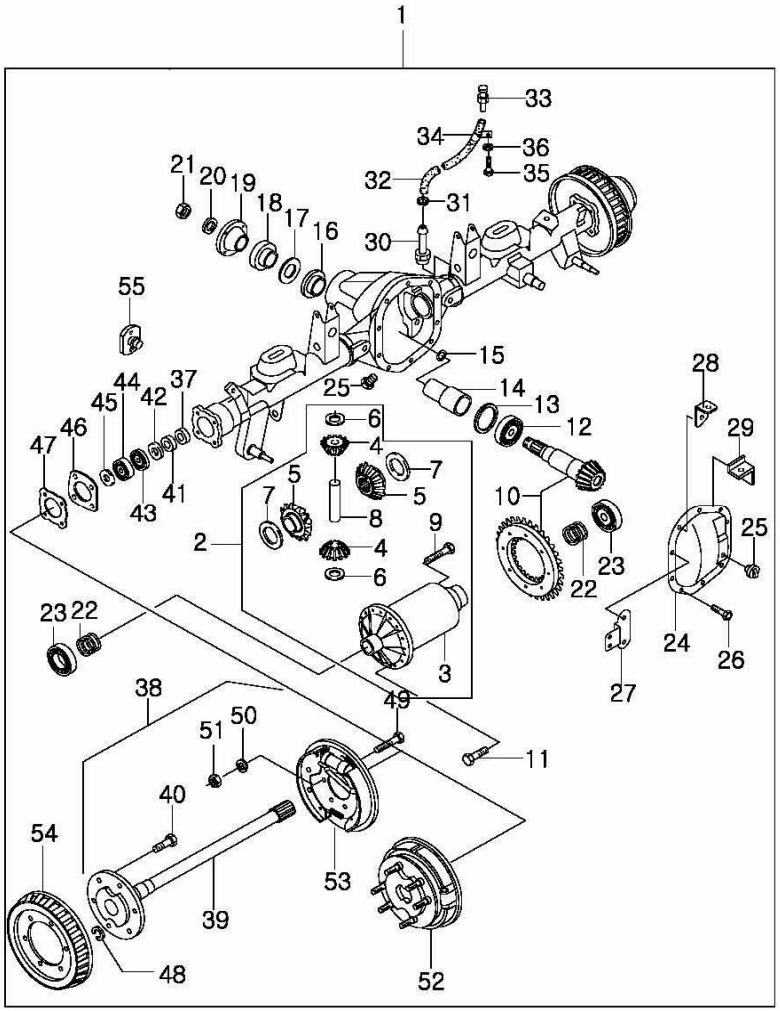

KEY NO.			PART NAME									
			ENGINE							APPLICATION		
ITC	PART NO.	T/M	G23D	G32D			OPTION	L/R	Q'TY	FROM	TO	REMARK
	[37]		OIL SEAL-HUB,INNER									
	PB04A-5014		S	S					2			
	[38]		AXLE SHAFT ASSY									
	PB04A-3002		S	S			DISC	L	1			
	PB04A-3003		S	S			DISC	R	1			
	[39]		SHAFT-AXLE									
	PB04A-3102		S	S					2			
	[40]		BOLT-WHEEL									
	PB04A-3104		S	S					12			
	[41]		RING-ABS,DISC									
	PB04A-3110		S	S					2			
	[42]		SNAP RING									
	PA04A-0128		S	S					2			
	[43]		RING-RETAINER									
	PB04A-3106		S	S					2			
	[44]		BEARING-HUB									
	PB04A-3105		S	S					2			
	[45]		OIL SEAL-HUB,OUTER									
	PB04A-3103		S	S					2			

4211

REAR AXLE

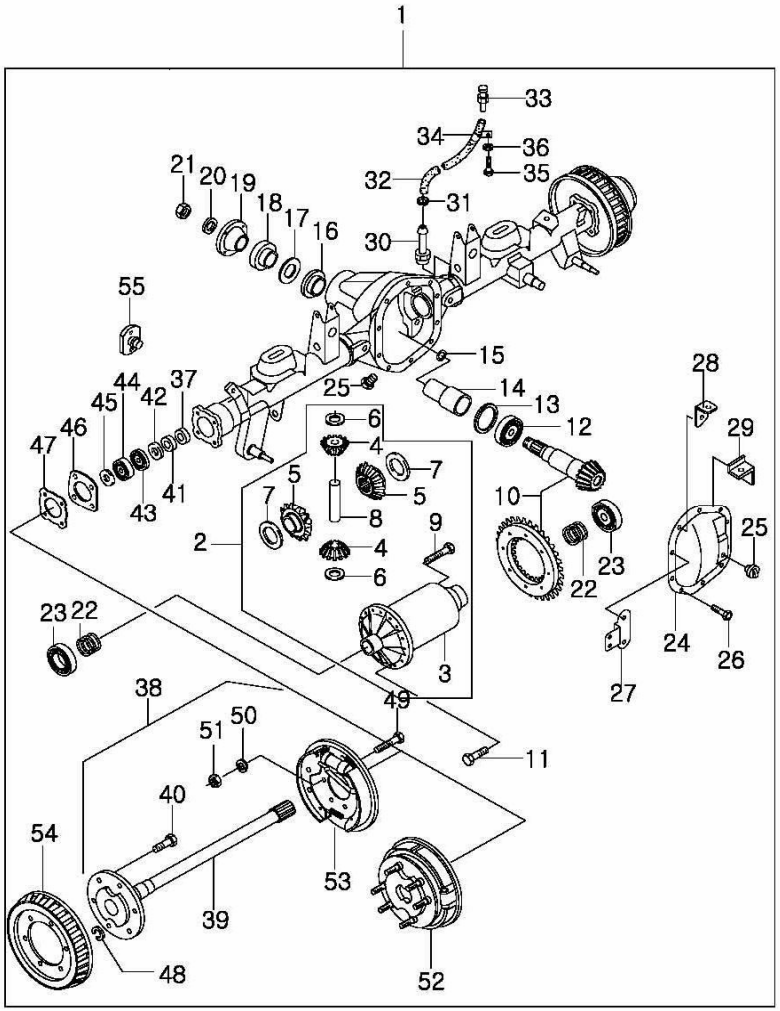

KEY NO.		PART NAME										
I T C	PART NO.	T / M	NGINE G 2 3 D	G 3 2 D			OPTION	L / R	Q ' T Y	APPLICATION FROM	APPLICATION TO	REMARK
	[46] PB04A-3107		RETAINER-OIL SEAL S	S					2			
	[47] PB04A-3109		DUST COVER S	S					2			
	[48] PB04A-5021		COVER-SHAFT S	S					2			
	[49] PB04A-5011		BOLT-BACK PLATE MTG. S	S					8			
	[50] PB04A-5012		WASHER-SPRING S	S					8			
	[51] PB04A-5013		NUT-BACK PLATE FIX S	S					8			
	[52] 48310 05100		BRAKE ASSY-DISC,PARKING S	S				L	1			
	48340 05100		S	S				R	1			
	[55] 42020 05000		PROTECTOR ASSY-ABS HOLE MTG S	S					1			

4310

FRONT AXLE MOUNTING

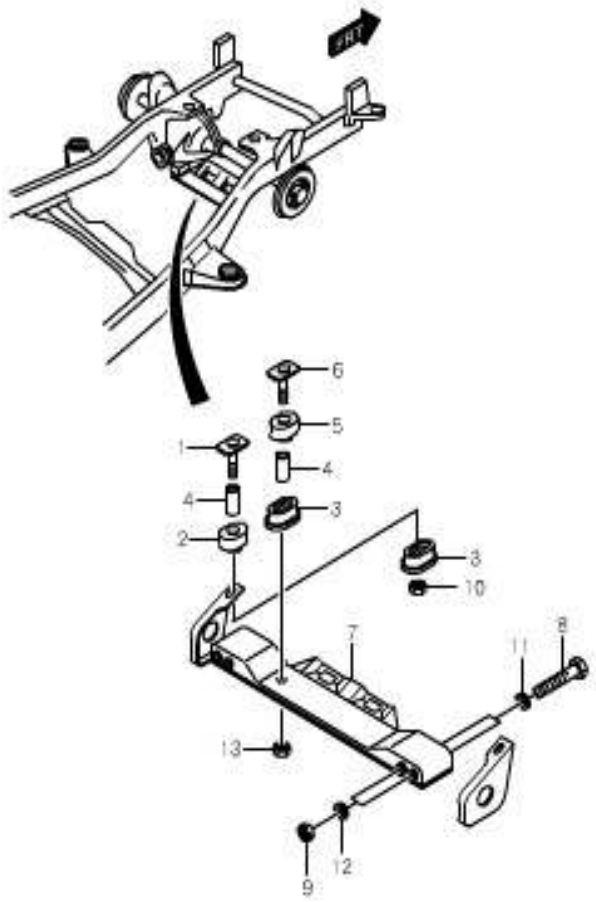

KEY NO.		PART NAME										
ITC	PART NO.	T/M	ENGINE G23D	ENGINE G32D	ENGINE	ENGINE	OPTION	L/R	Q'TY	APPLICATION FROM	APPLICATION TO	REMARK
	[01] 41070 08000		BOLT A-FRT AXLE MTG FRT S	S					2			
	[02] 41601 08000		BUSH-FRT AXLE MTG UPR S	S					2			
	[03] 41603 08000		BUSH-FRT AXLE MTG LWR S	S					3			
	[04] 41612 05000		SPACER-FRT AXLE MTG S	S					3			
	[05] 41605 08000		BUSH-FRT AXLE MTG RR UPR S	S					1			
	[06] 41640 08000		BOLT A-FRT AXLE MTG RR S	S					1			
	[07] 41620 05102		C/MBR A-FRT AXLE MTG S	S					1			
	[08] 41650 05000		BOLT-C/MBR MTG S	S					4			
	[09] 92896 1200D		NUT-HEX FLG S	S					4			M12 X 1.26

4310

FRONT AXLE MOUNTING

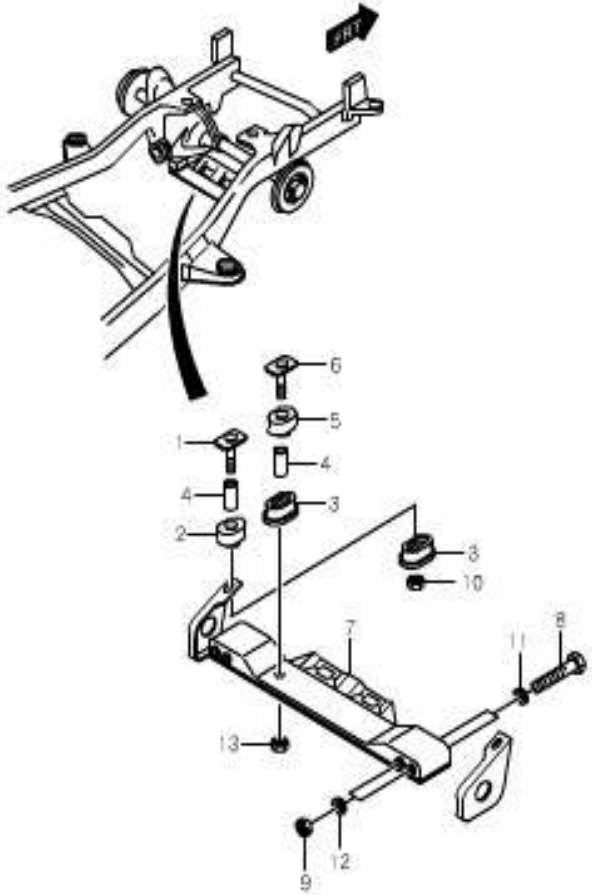

KEY NO.		PART NAME										
ITC	PART NO.	T/M	ENGINE G23D	ENGINE G32D	ENGINE	ENGINE	OPTION	L/R	Q'TY	APPLICATION FROM	APPLICATION TO	REMARK
	[10] 92316 1400D		NUT-SELF LOCK S	S					2			M14 X 1.6
	[11] 93310 1200D		WASHER-SPRING S	S					4			M12 X 1.76
	[12] 93414 1200D		WASHER-PLAIN S	S					4			M13
	[13] 99060 14001		NUT-HEX SELF S	S					1			M14 X 105

4410

FRONT SUSPENSION

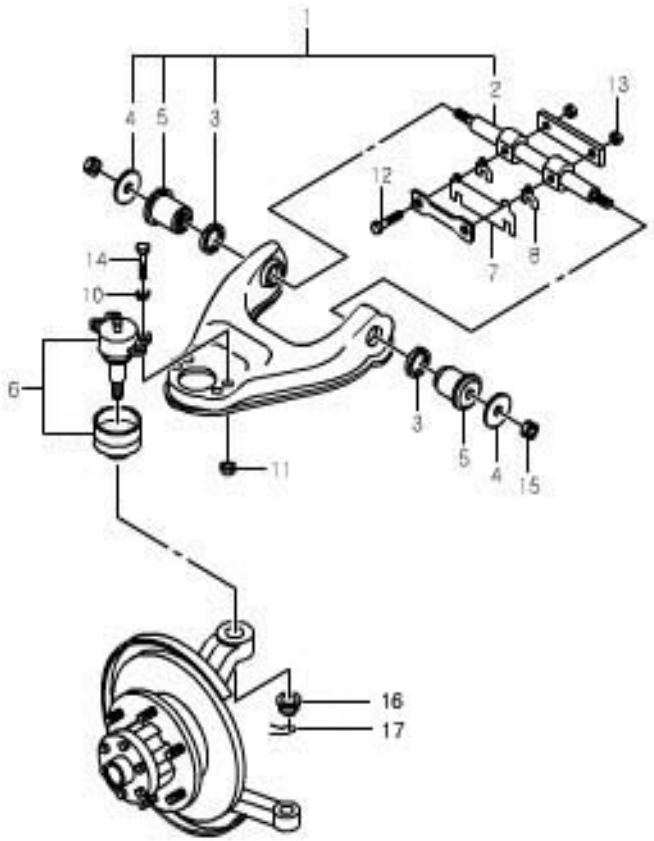

KEY NO.		PART NAME										
			ENGINE							APPLICATION		
ITC	PART NO.	T/M	G23D	G32D			OPTION	L/R	Q'TY	FROM	TO	REMARK
	[01]		ARM A-FRT SUSP UPR									
	44401 05001		S	S				L	1			
	44402 05001		S	S				R	1			
	[02]		PIN-FULCRUM									
	44451 05000		S	S					2			
	[03]		WASHER-FRT UPR ARM INR									
	44452 05000		S	S					4			
	[04]		WASHER-FRT UPR ARM OTR									
	44453 05000		S	S					4			
	[05]		BUSHING A-FRT UPR ARM									
	44490 05001		S	S					4			
	[06]		END A-FRT SUSP UPR									
	44430 03011		S	S					2			
	[07]		SHIM-FRT CAMBER									
	44471 05161		S	S					A			
	44472 05321		S	S					A			
	[08]		SHIM-FRT CASTER									
	44473 05160		S	S					A			
	44473 05080		S	S					A			
	44473 05040		S	S					A			

4410

FRONT SUSPENSION

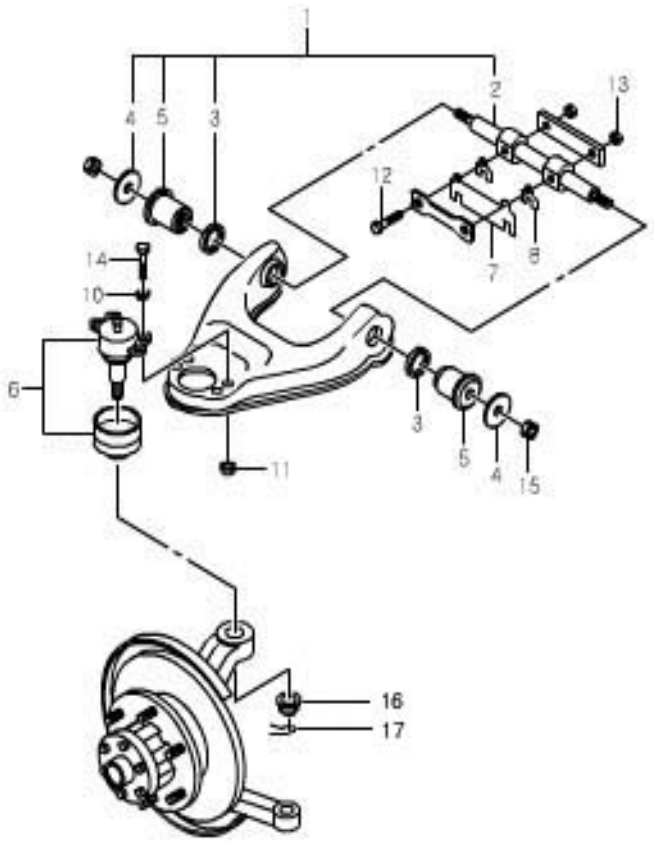

KEY NO.		PART NAME										
			ENGINE							APPLICATION		
ITC	PART NO.	T/M	G23D	G32D			OPTION	L/R	Q'TY	FROM	TO	REMARK
	[10] 93310 0800D		WASHER-SPRING S	S					8			M9
	[11] 92064 0800D		NUT-SMALL HEX S	S					8			M8 X 1.26
	[12] 91630 12651		BOLT-HEX FLG S	S					4			M12 X 1.26
	[13] 99060 12001		NUT-HEX SELF S	S					4			M12 X 1.25
	[14] 91304 0825D		BOLT-HEX S	S					8			M8 X 1.25 X 26
	[15] 99060 14000		NUT-HEX SELF S	S					4			M14 X 1.5
	[16] R203A-0010		NUT-HEX,SLOTTED S	S					2			
	[17] 95304 3030D		PIN-COTTER S	S					2			

4411

FRONT SHOCK ABSORBER

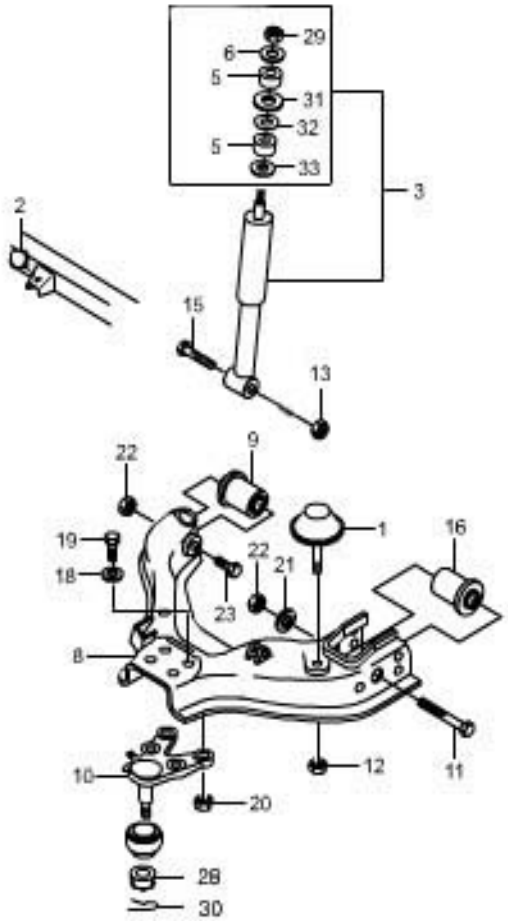

KEY NO. ITC	PART NO.	T/M	ENGINE G23D	ENGINE G32D			OPTION	L/R	Q'TY	APPLICATION FROM	APPLICATION TO	REMARK
	[01] 44210 05010		S	S			BUMPER A-FRT SUSP		2			
	[02] 44481 03000		S	S			BUMPER-REBOUND FRT		2			
	[03] 44301 05210		S	S			SHK/ABS A-GAS FRT		2			
	[05] 44311 05100		S	S			BUSH-SHK/ABS ECS-S30		4			
	[06] 44312 05100		S	S			WASHER-SHK/ABS OTR,S30		2			
	[08] 44501 05005		S	S			ARM A-FRT SUSP LWR	L	1			
	44502 05005		S	S				R	1			
	[09] 44550 05001		S	S			BUSHING-FRT LWR ARM		2			
	[10] 44505 05001		S	S			END A-FRT SUSP LWR		2			
	[11] 44592 05000		S	S			PIN-FRT LWR ARM MTG-RR		2			

4411

FRONT SHOCK ABSORBER

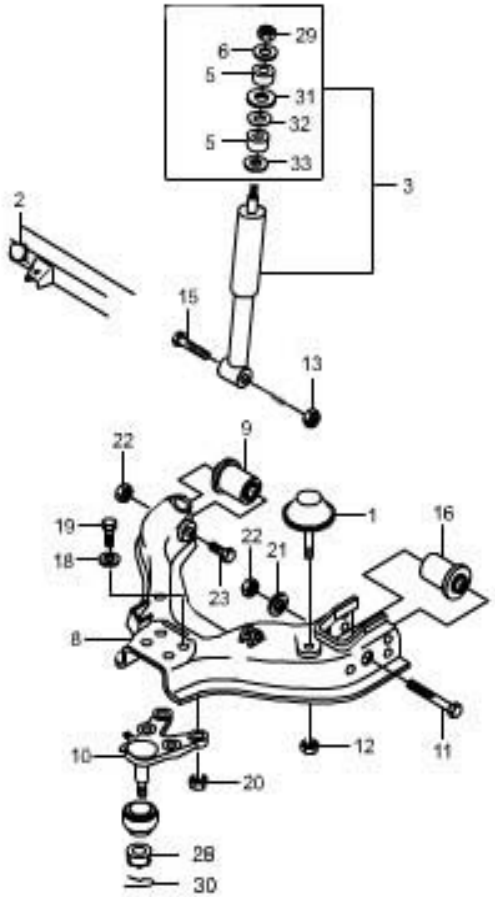

KEY NO.		PART NAME										
			ENGINE							APPLICATION		
ITC	PART NO.	T/M	G23D	G32D			OPTION	L/R	Q'TY	FROM	TO	REMARK
	[12] 92894 10001		NUT-HEX FLG S	S					2			M10 X 1.25
	[13] 92036 1200D		NUT-HEX S	S					2			M12 X 1.25
	[15] 95767 12551		BOLT-HEX SEMS S	S					2			M12 X 1.25 X 55
	[16] 40636 05001		BUSHING-FRT LWR ARM,RR S	S					2			
	[18] 93310 1200D		WASHER-SPRING S	S					8			M12 X 1.75
	[19] 91247 1245D		BOLT-HEX S	S					8			M12 X 1.25 X 45
	[20] 92076 1200D		NUT-SMALL HEX S	S					8			M12 X 1.25
	[21] 93414 1400D		WASHER-PLAIN S	S					2			M14
	[22] 99060 14000		NUT-HEX SELF S	S					4			M14 X 1.5

4411

FRONT SHOCK ABSORBER

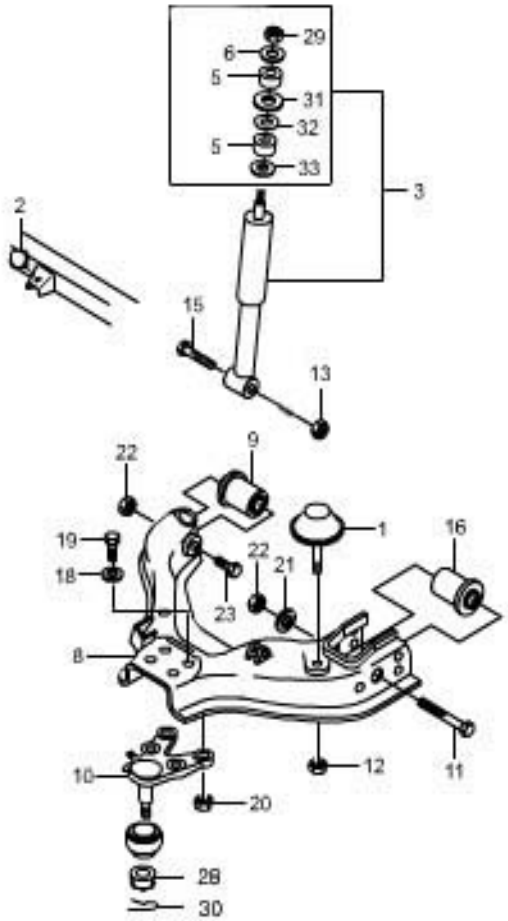

KEY NO.		PART NAME										
ITC	PART NO.	T/M	ENGINE G23D	ENGINE G32D	ENGINE	ENGINE	OPTION	L/R	Q'TY	APPLICATION FROM	APPLICATION TO	REMARK
	[23] H1098 14001		BOLT-HEX S	S					2			M14 X 1.25 X1.0
	[28] R203A-0010		NUT-HEX,SLOTTED S	S					2			
	[29] 99060 10001		NUT-HEX SELF S	S					2			M10 X 1.25
	[30] 95304 3030D		PIN-COTTER S	S					2			
	[31] 44313 05200		WASHER-SHK/ABS,CTR,UPR S	S					2			
	[32] 44313 05100		WASHER-SHK/ABS CTR,S30 S	S					2			
	[33] 44312 05110		WASHER-SHK/ABS CTR,S30 S	S					2			

4420

STABILIZER BAR

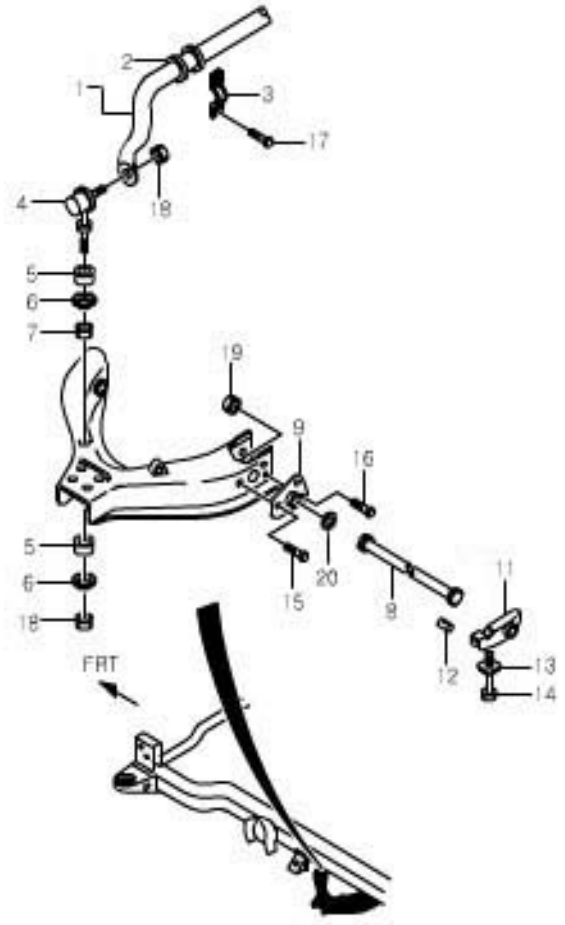

KEY NO.		PART NAME										
			ENGINE							APPLICATION		
I T C	PART NO.	T / M	G 2 3 D	G 3 2 D			OPTION	L / R	Q ' T Y	FROM	TO	REMARK
	[01]		STAB/BAR-FRT SUSP									
	44711 05101		S	S					1			
	[02]		BUSH-STAB/BAR MTG,FRT									
	631 323 03 85		S	S					2			
	[03]		BRKT-STAB/BAR MTG,FRT									
	661 323 37 40		S	S					2			
	[04]		LINK A-STABILIZER									
	44750 05001		S	S					2			
	[05]		BUSH-STAB/BAR LINK MTG									
	44730 05100		S	S					4			
	[06]		WASHER-SHOCK ABSORBER OTR									
	44312 05000		S	S					4			
	[07]		WASHER-SHOCK ABSORBER CTR									
	44313 05000		S	S					2			
	[08]		TORSION BAR									
	44811 05100		S					L	1			
	44821 05100		S					R	1			
	[09]		ARM-FRT SUSP TORQUE									
	44831 05002		S	S					2			

4420

STABILIZER BAR

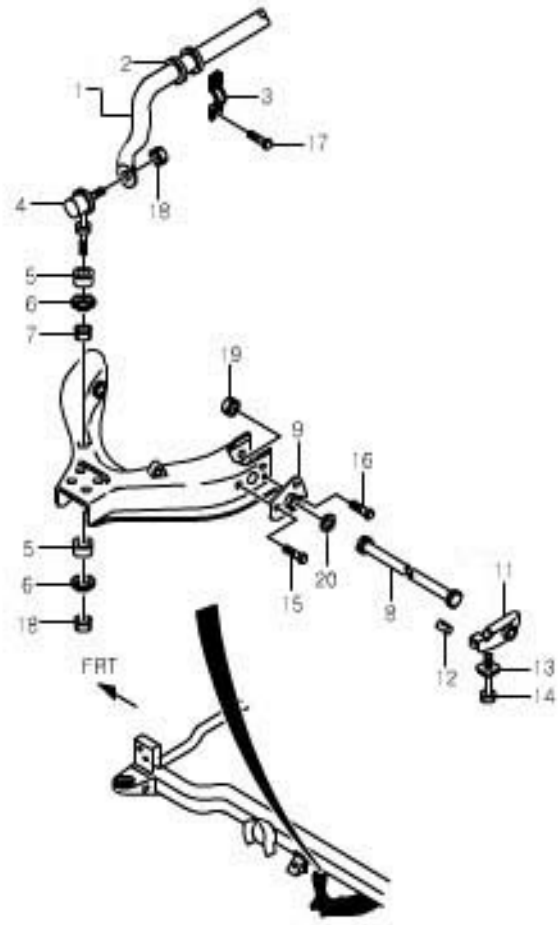

KEY NO.		PART NAME										
			ENGINE							APPLICATION		
ITC	PART NO.	T/M	G23D	G32D			OPTION	L/R	Q'TY	FROM	TO	REMARK
	[11] 44850 05002		ARM A-HEIGHT CONTROL S	S					2			
	[12] 44654 03001		END PIECE-TORSION BAR S	S					2			
	[13] 44655 03000		SEAT-TORSION BAR H/CONTROL S	S					2			
	[14] 44656 03001		BOLT-TORSION BAR H/CONTROL S	S					2			
	[15] 44891 05000		BOLT-TORQUE ARM S	S					2			M12 X 1.25 X 40
	[16] 44892 05001		BOLT-TORQUE ARM S	S					4			M10 X 1.25 X 38
	[17] 95837 1030D		BOLT-HEX SEMS S	S					4			M10 X 1.25 X 30
	[18] 99060 10001		NUT-HEX SELF S	S					4			M10 X 1.25
	[19] 92894 10001		NUT-HEX FLG S	S					2			M10 X 1.25
	[20] 44652 03000		SEAT-TORSION BAR END S	S					2			

4511

REAR SHOCK ABSORBER

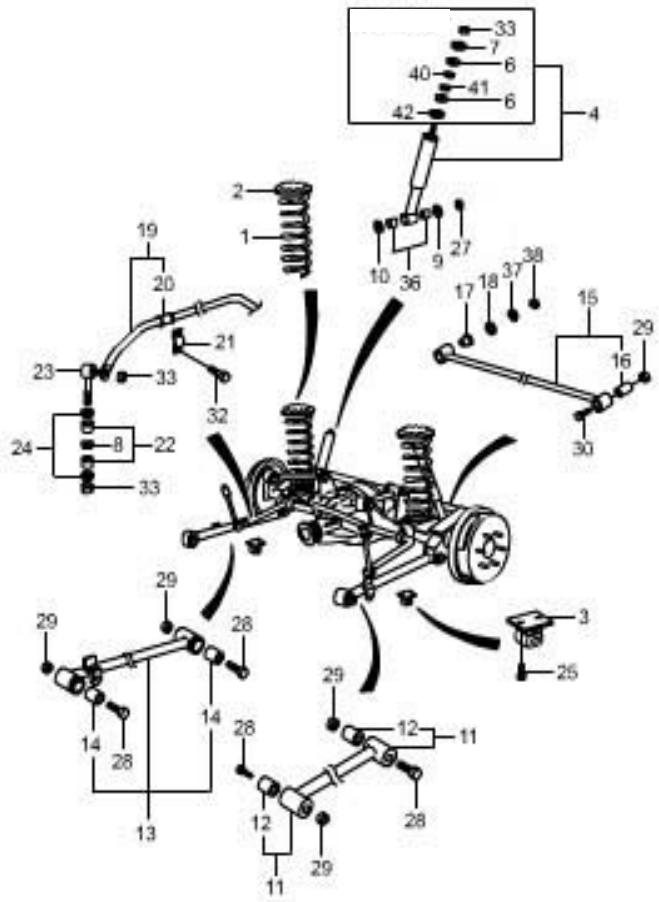

KEY NO. ITC	PART NO.	T/M	ENGINE G23D	ENGINE G32D			OPTION	L/R	Q'TY	APPLICATION FROM	APPLICATION TO	REMARK
	[01] COIL SPRING-RR											
	45110 05101		S	S					2			
	[02] RUBBER SEAT-RR SPRG UPR											
	45191 05010		S	S					2			
	[03] BUMPER A-RR SUSPENSION											
	45210 05000		S	S				L	1			
	45220 05000		S	S				R	1			
	[04] SHK/ABS A-GAS RR											
	45301 05210		S	S					2			
	[06] BUSH-SHK/ABS ECS-S30											
	44311 05100		S	S					4			
	[07] WASHER-SHK/ABS OTR,S30											
	44312 05100		S	S					2			
	[08] WASHER-SHOCK ABSORBER CTR											
	44313 05000		S	S					2			
	[09] WASHER-S/ABS,OTR											
	45312 03000		S	S					2			
	[10] WASHER-S/ABS INR											
	45351 05000		S	S					2			

4511

REAR SHOCK ABSORBER

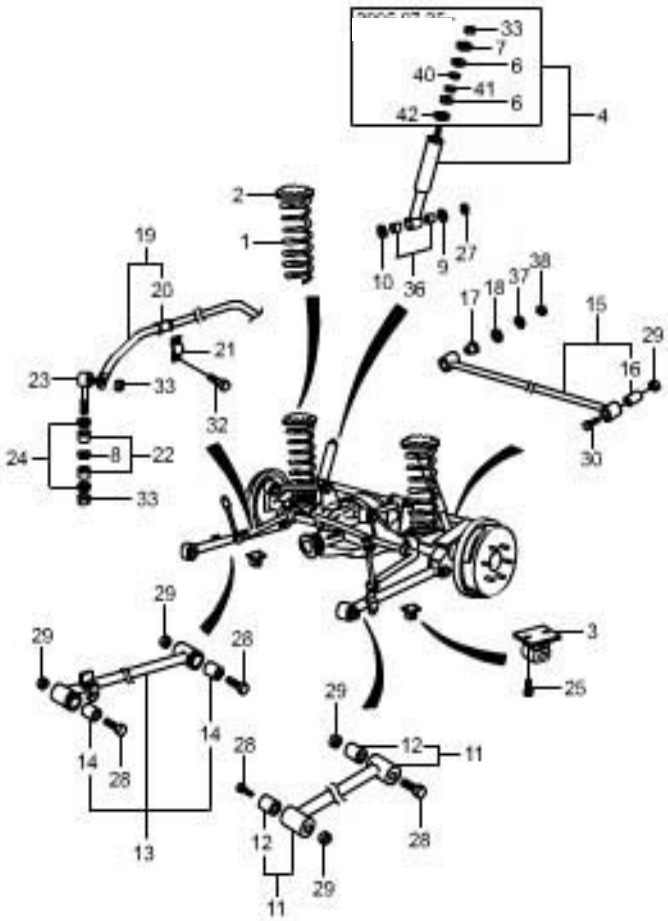

KEY NO.		PART NAME										
			ENGINE							APPLICATION		
ITC	PART NO.	T/M	G23D	G32D			OPTION	L/R	Q'TY	FROM	TO	REMARK
	[11] 45401 05001		S	S					2			
	[12] 45421 05000		S	S					4			
	[13] 45501 05302		S	S				L	1			
	45502 05302		S	S				R	1			
	[14] 45551 05000		S	S					4			
	[15] 45601 05000		S	S					1			
	[16] 45621 05000		S	S					1			
	[17] 45631 05000		S	S					2			
	[18] 45632 05000		S	S					1			
	[19] 45710 05002		S	S					1			

4511

REAR SHOCK ABSORBER

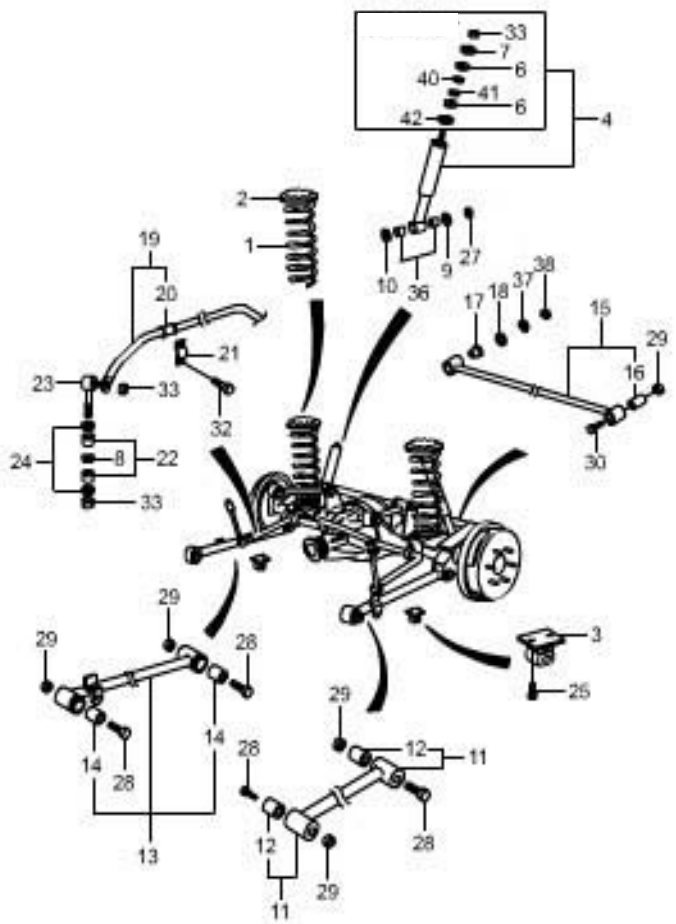

KEY NO. ITC	PART NO.	T/M	ENGINE G23D	ENGINE G32D			OPTION	L/R	Q'TY	APPLICATION FROM	APPLICATION TO	REMARK
	[20] 45712 05000		BUSH-RR STABILIZER BAR S	S					2			
	[21] 44725 05000		CAP-STAB/BAR MTG S	S					2			
	[22] 44730 05100		BUSH-STAB/BAR LINK MTG S	S					4			
	[23] 44750 0500		LINK A-STABILIZER S	S					2			
	[24] 44312 05000		WASHER-SHOCK ABSORBER OTR S	S					4			
	[25] 95837 1025D		BOLT-HEX SEMS S	S					4			M10X1.25X25
	[27] 99060 12003		NUT-HEX SELF S	S					2			M10X1.25
	[28] 91098 14951		BOLT-HEX S	S					8			M14X1.5X95
	[29] 99060 14000		NUT-HEX SELF S	S					9			M14X1.5

4511

REAR SHOCK ABSORBER

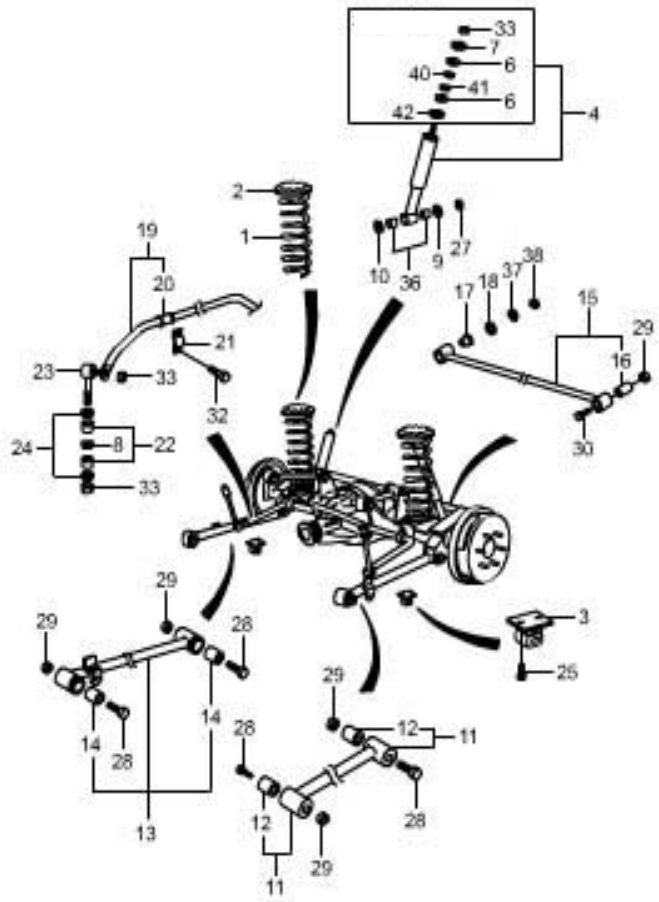

KEY NO.		PART NAME										
			ENGINE							APPLICATION		
I T C	PART NO.	T / M	G 2 3 D	G 3 2 D			OPTION	L / R	Q - T Y	FROM	TO	REMARK
	[30] 91098 14801		BOLT-HEX S	S					1			M14X1.5X80
	[32] 95837 1030D		BOLT-HEX SEMS S	S					4			M10X1.25X30
	[33] 99060 10001		NUT-HEX SELF S	S					6			M10X1.25
	[36] 44311 01001		BUSH-SHK/ABS S	S					4			
	[37] 93310 1600D		WASHER-SPRING S	S					1			M16
	[38] 92076 1600D		NUT-SMALL LOCK S	S					1			M16 X 1.5
	[40] 44313 05200		WASHER-SHK/ABS,CTR,UPR S	S					2			
	[41] 44313 05100		WASHER-SHK/ABS CTR,S30 S	S					2			
	[42] 44312 05110		WASHER-SHK/ABS CTR,S30 S	S					2			

4611

STEERING WHEEL

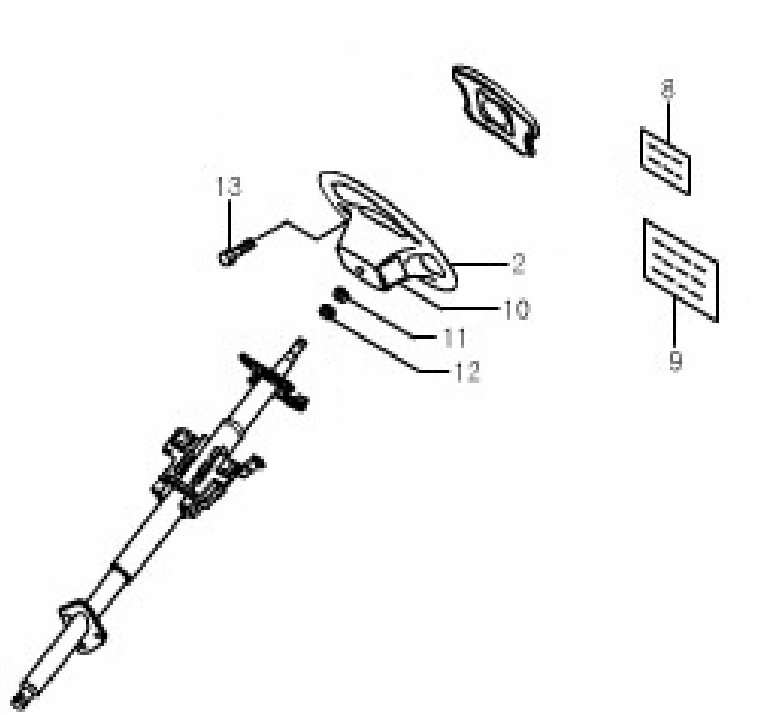

KEY NO.		PART NAME										
			ENGINE							APPLICATION		
I T C	PART NO.	T / M	G 2 3 D	G 3 2 D			OPTION	L / R	Q ' T Y	FROM	TO	REMARK
	[02]		BODY A-S/WHEEL									
	46101 06550		S	S			&RAS&SH3.		1			
	[10]		LID-STRG WHEEL									
	46141 06500		S	S				L	1			
	46142 06500		S	S				R	1			
	[11]		NUT-HEX									
	92036 14001		S	S					1			M14 X 1.5
	[12]		WASHER-WAVE									
	93384 14001		S	S					1			M14
	[13]		BOLT-HEX FLG									
	46103 06500		S	S					2			M6 X 1.0

4613

STEERING COLUMN

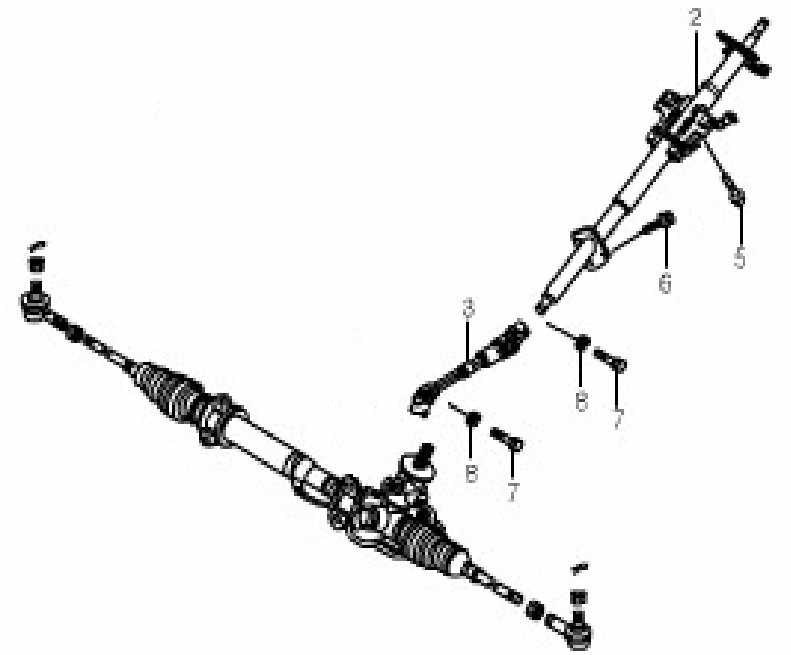

KEY NO.		PART NAME										
			ENGINE							APPLICATION		
I T C	PART NO.	T / M	G 2 3 D	G 3 2 D			OPTION	L / R	Q ' T Y	FROM	TO	REMARK
	[02] 46210 05501		COLUMN & SHAFT A-TILT S	S			&SC1.		1			
	[03] 46310 06301		SHAFT A-STRG LWR S	S					1			
	[05] 95917 0830D		BOLT-HEX SEMS S	S					2			M8 X 1.25 X 30
	[06] 93054 08001		NUT-CON WASHER S	S					3			M8 X 1.25
	[07] 46311 05000		BOLT-JOINT S	S					2			
	[08] 93310 0800D		WASHER-SPRING S	S					2			M8

4620

STEERING GEAR LINKAGE

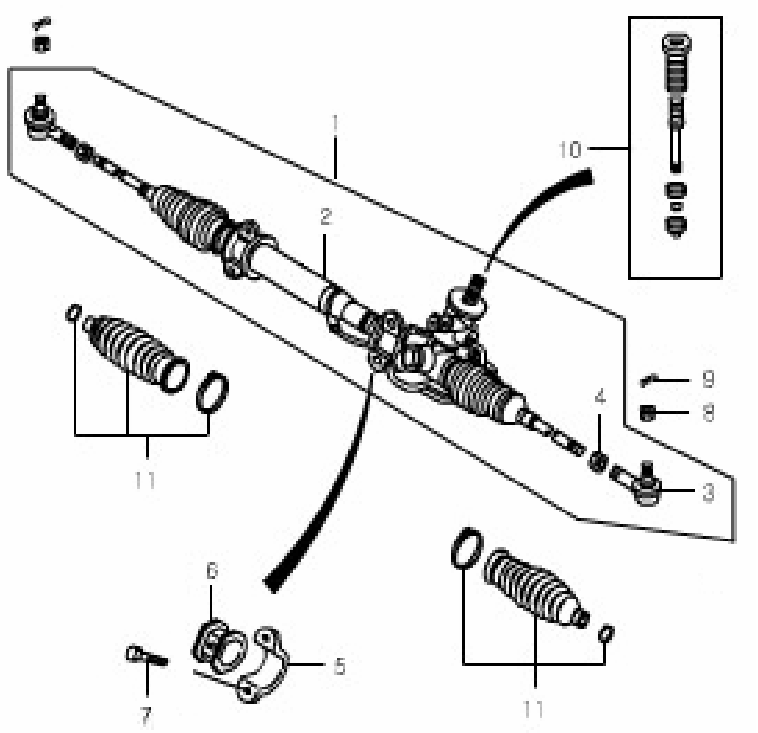

KEY NO.		PART NAME										
			ENGINE							APPLICATION		
ITC	PART NO.	T/M	G23D	G32D			OPTION	L/R	Q'TY	FROM	TO	REMARK
	[1] 46510 05755		LINKAGE A-GEAR & O.B.J S	S					1			
	[2] 46500 05756		GEAR & LINKAGE A-STRG S	S					1			
	[3] 46660 05510		END A-TIE ROD S	S					2			
	[4] 46516 05000		NUT-TIE ROD S	S					2			M14 X 1.5
	[5] 46510 05000		CLAMP A-GEAR MTG S	S					2			
	[6] 46511 05001		RUBBER-GEAR HSG MTG S	S					1			
	[7] 46515 05001		BOLT-GEAR MTG S	S					4			M12 X 1.25
	[8] 92286 14001		NUT-SML SLOT/LOW S	S					2			M14 X 1.5
	[9] 95304 3025D		PIN-SPLIT S	S					2			M3 X 25

4620

STEERING GEAR LINKAGE

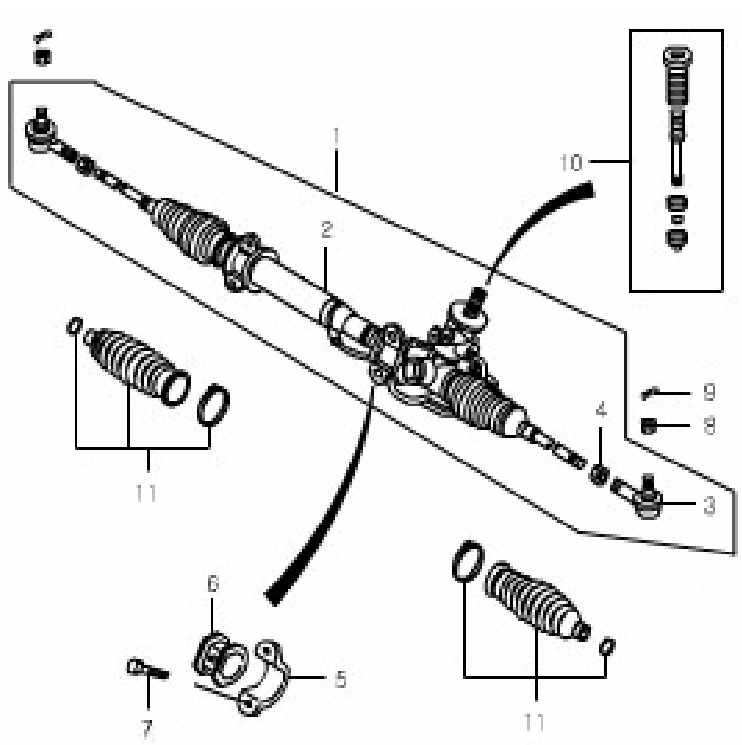

KEY NO.		PART NAME										
			ENGINE							APPLICATION		
ITC	PART NO.	T/M	G23D	G32D			OPTION	L/R	Q'TY	FROM	TO	REMARK
	[10] 465KT 05000		RING KIT-P/STRG GEAR BOX S	S					1			
	[11] 466KT 05000		BOOT KIT-P/STRG GEAR BOX S	S					1			

4641

POWER STEERING PIPE LINE

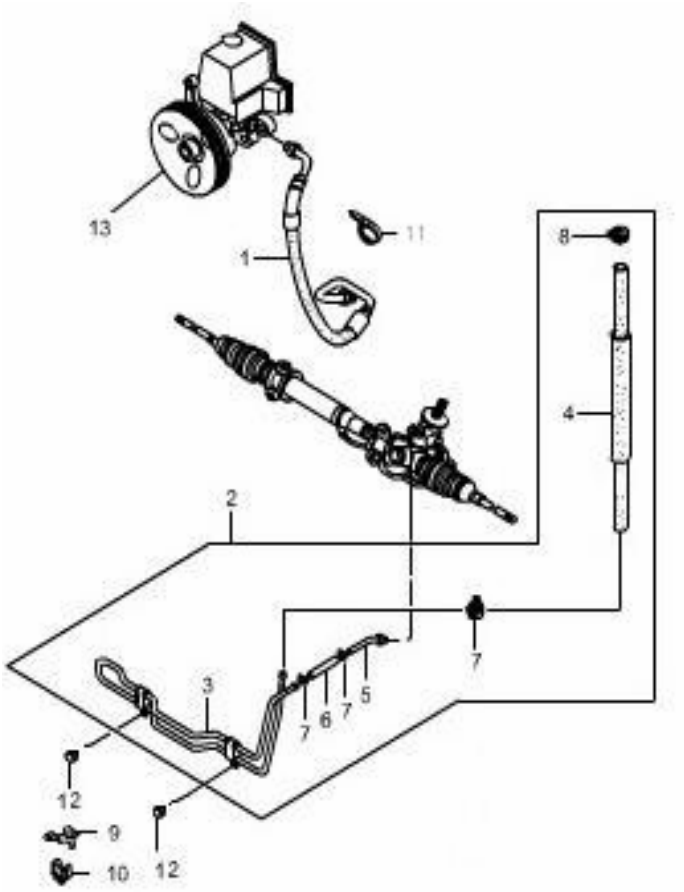

KEY NO.		PART NAME										
			ENGINE							APPLICATION		
ITC	PART NO.	T/M	G23D	G32D			OPTION	L/R	Q'TY	FROM	TO	REMARK
	[01]		HOSE A-PUMP TO GEAR									
	47840 05530		S				&GG2.		1			
	47840 05520			S			&GG3.		1			
	[02]		HOSE & TUBE A-RETURN									
	47830 05042		S				&GG2.		1			
	47830 05012			S			&GG3.		1			
	[03]		TUBE A-HOSE TO HOSE									
	47870 05330		S	S					1			
	[04]		HOSE-RETURN									
	47861 06102		S				&GG2.		1			
	47861 06501			S			&GG3.		1			
	[05]		TUBE A-GEAR TO HOSE									
	47850 05201		S	S					1			
	[06]		HOSE-TUBE TO TUBE									
	47860 06000		S	S					1			
	[07]		CLAMP-SPRG RETURN HOSE									
	47869 06000		S	S					3			
	[08]		CLAMP-SPRG RETURN HOSE									
	47869 06100		S	S					1			

4641

POWER STEERING PIPE LINE

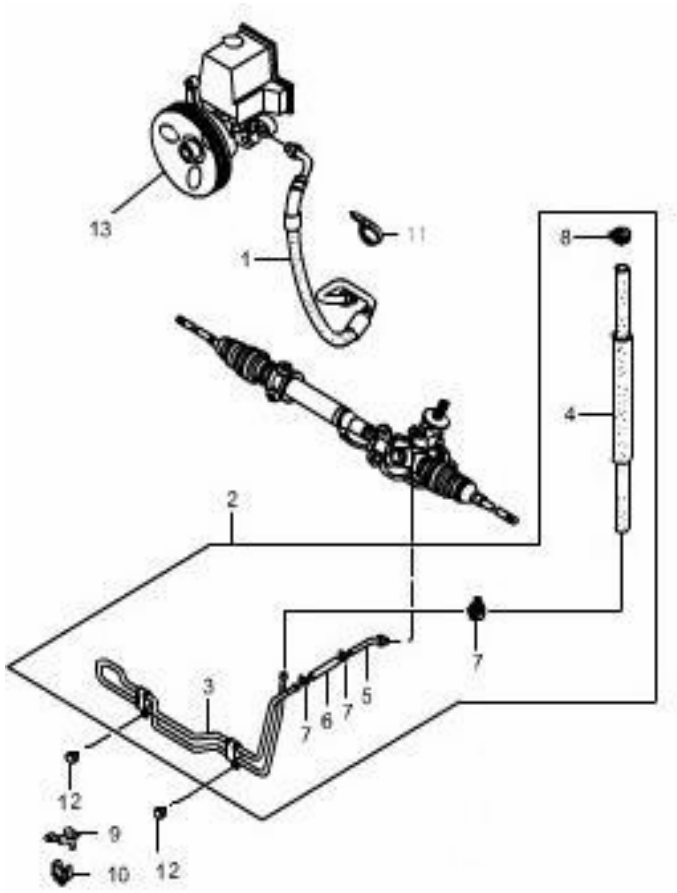

KEY NO.		PART NAME										
			ENGINE							APPLICATION		
ITC	PART NO.	T/M	G23D	G32D			OPTION	L/R	Q'TY	FROM	TO	REMARK
	[9] 47875 05001		BRKT-RETURN TUBE MTG S	S					1			
	[10] 47875 05101		CLAMP-PIPE S	S					1			
	[11] 82952 05020		BAND S	S					1			
	[12] 93074 06001		NUT-CON WASHER S	S					2			M6 X 1.0
	[13] 162 460 34 80		PUMP-POWER STRG S	S					1			

4810

BRAKE PEDAL

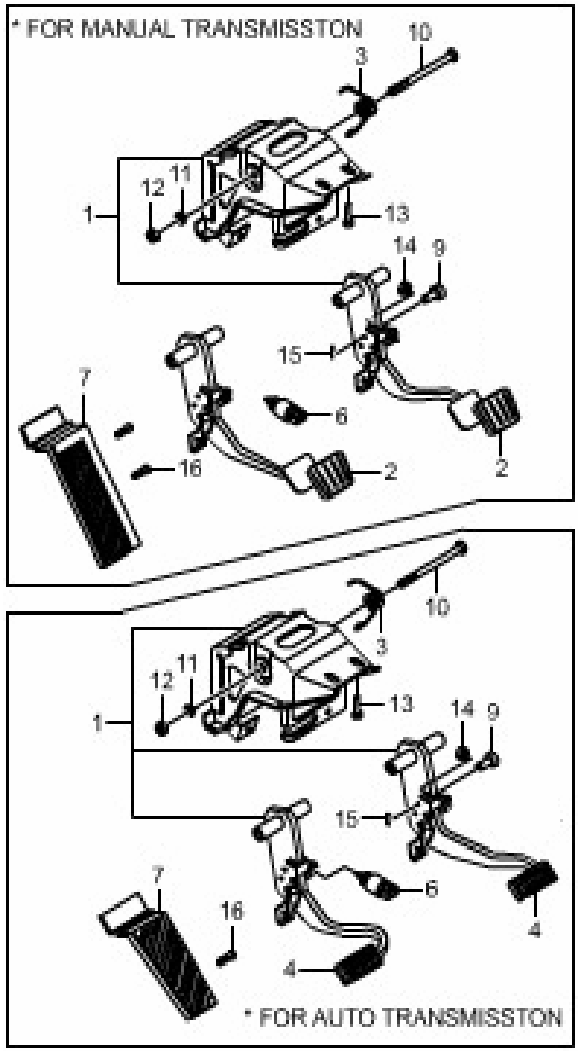

KEY NO.		PART NAME											
			ENGINE							APPLICATION		
I T C	PART NO.	T / M	G 2 3 D	G 3 2 D			OPTION	L / R	Q ' T Y	FROM	TO	REMARK
	[01]		PEDAL BOX A-BRAKE									
	48800 05010	M	S				&PM0.	L	1			
	48800 05110	A	S				&PM1.	L	1			
	48800 05110	A		S			&PM1.	L	1			
	[02]		PAD-CLUTCH PEDAL									
	48866 03000	M	S	S			&PM0.		1			
	[03]		SPRING-BRAKE PDL RETURN									
	48871 08000		S	S					1			
	[04]		PAD-BRAKE PEDAL									
	48873 05100	A	S	S			&PM1.		1			
	[06]		SWITCH A-S/LAMP(4P)									
	85710 05030		S	S					1			
	[07]		PAD-FOOTREST									
	48890 05002		S	S				L	1			
	[09]		PIN-CLEVIS									
	30460 05001		S	S					1			
	[10]		FULCRUM-PEDAL TO BRKT									
	48872 05000		S	S					1			
	[11]		WASHER-SPRING									
	93310 10001		S	S					1			M10

4810

BRAKE PEDAL

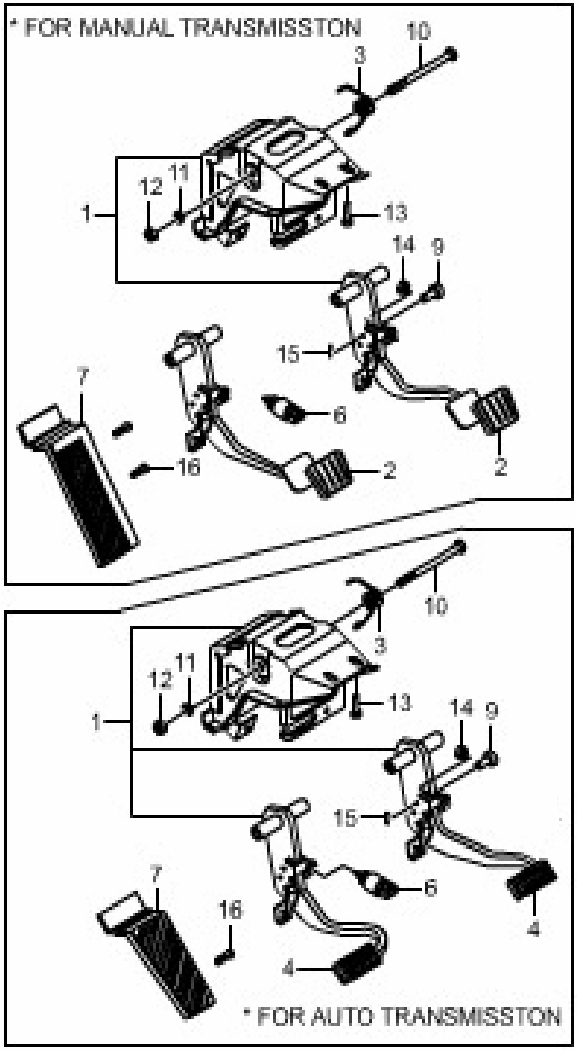

KEY NO.		PART NAME										
			ENGINE							APPLICATION		
I T C	PART NO.	T / M	G 2 3 D	G 3 2 D			OPTION	L / R	Q ' T Y	FROM	TO	REMARK
	[12] 92014 10001		NUT-HEX S	S					1			M10 X 1.25
	[13] 95814 0820D		BOLT-HEX SEMS S	S					2			M8 X 1.25 X 20
	[14] 92864 10001		NUT-PROJ SQ S	S					1			M10 X 1.25
	[15] 95314 10001		PIN-SNAP S	S					1			M10

4821

BRAKE PIPE(ABS 5.3)

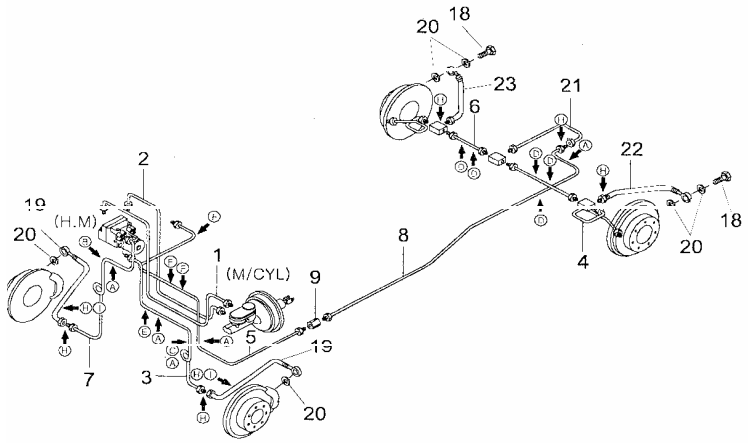

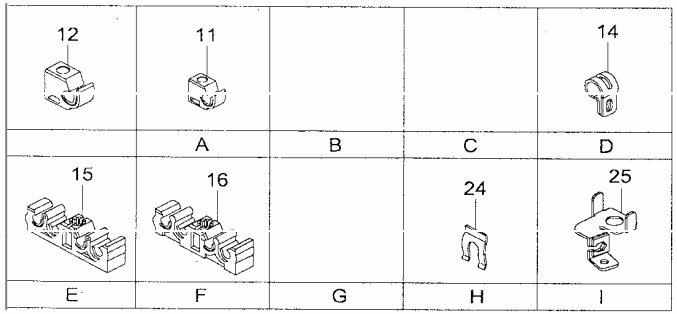

KEY NO. ITC	PART NO.	T/M	ENGINE G23D	ENGINE G32D	ENGINE	ENGINE	OPTION	L/R	Q'TY	APPLICATION FROM	APPLICATION TO	REMARK
	[01] 48610 05A10		TUBE A-M/CYL PRI TO H.M S	S			&KAB.		1			
	[02] 48620 05A10		TUBE A-M/CYL SEC TO H.M S	S			&KAB.		1			
	[03] 48630 05A01		TUBE A-H.M TO FRT S	S			&KAB.	L	1			
	[04] R205F-0200		TUBE A-REAR BRAKE S	S				L	1			
	[05] 48640 05A02		TUBE A-H.M TO 2 W/CON S	S			&KAB.	L	1			
	[06] R205F-0300		TUBE A-REAR BRAKE S	S			&KAB.	R	1			
	[07] 48650 05A00		TUBE A-H.M TO FRT S	S			&KAB.	R	1			
	[08] 48660 05112		TUBE A-2W/CON TO RR HOSE S	S				L	1			
	[09] 48655 03000		2WAY CONN-BRAKE TUBE S	S			&KAB.		1			

4821

BRAKE PIPE(ABS 5.3)

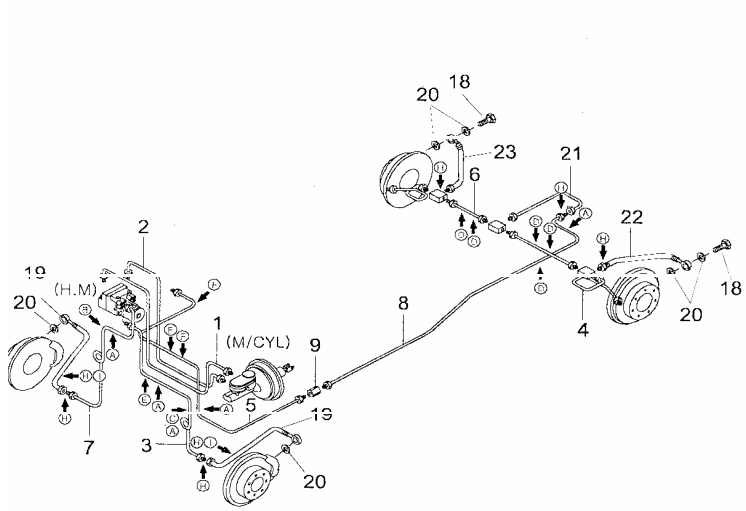

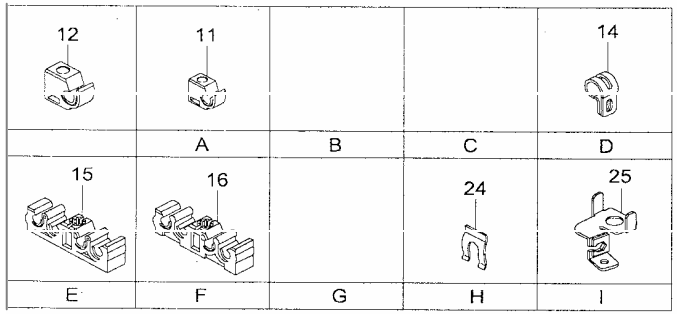

KEY NO. ITC	PART NO.	T/M	ENGINE G23D	ENGINE G32D			OPTION	L/R	Q'TY	APPLICATION FROM	APPLICATION TO	REMARK
	[11] 48691 05000		CLIP-BRAKE TUBE MTG S	S			&KAB.		5			
	[14] 48694 05000		CLIP-BRAKE TUBE MTG S	S					5			
	[15] 48695 06300		CLIP-BRAKE TUBE MTG (5H) S	S					1			
	[16] 48698 05000		CLIP-ABD TUBE MTG S	S					2			
	[18] 48180 05000		EYE BOLT-HOSE TO CALIPER S	S					2			
	[19] 48710 05020		HOSE A-BRK FRT S	S					2			
	[20] 48716 03000		GASKET-BRK HOSE TO CALIPER S	S					6			
	[21] 48720 05020		HOSE A-BRAKE RR S	S			&KAB.		1			
	[22] 48730 05120		HOSE A-BRK RR,LH S	S				L	1			

4821

BRAKE PIPE(ABS 5.3)

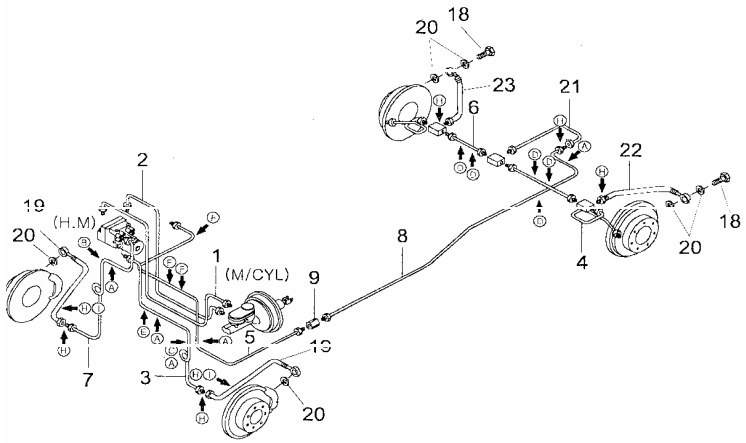

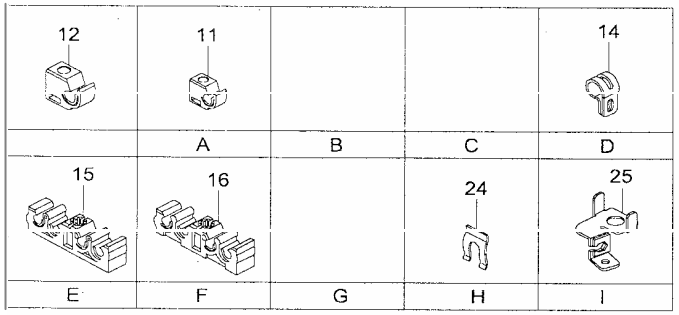

KEY NO. ITC	PART NO.	T/M	ENGINE G23D	ENGINE G32D	ENGINE	ENGINE	OPTION	L/R	Q'TY	APPLICATION FROM	APPLICATION TO	REMARK
	[23] 48740 05120		S	S				R	1			
	[24] 48735 03002			S			&KAB.		7			
	[25] 48751 05000		S	S				L	1			
	48752 05000			S				R	1			
	[27] 98274 0520B			S					5			M5 X 0.8 X 20
	[28] 95814 0835D			S					1			M8 X 1.25 X 35

PART NAME

4830

FRONT BRAKE

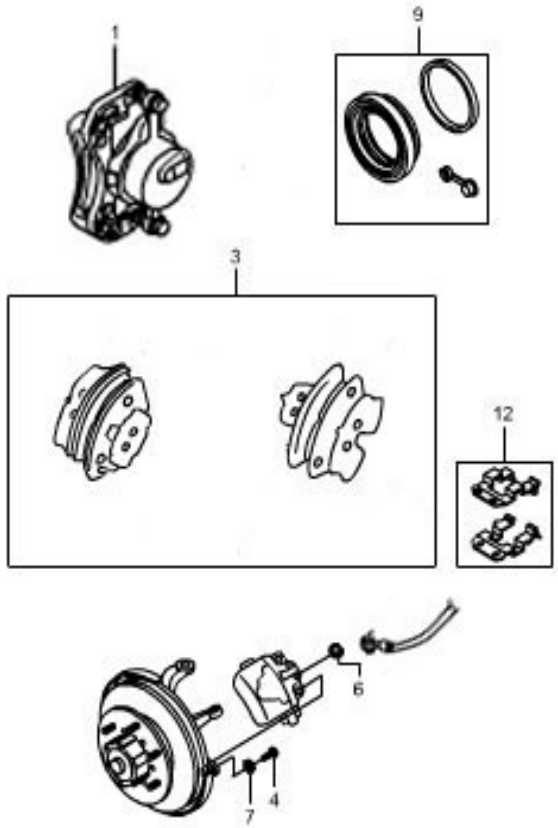

KEY NO.		PART NAME										
			ENGINE							APPLICATION		
I T C	PART NO.	T / M	G 2 3 D	G 3 2 D			OPTION	L / R	Q ' T Y	FROM	TO	REMARK
	[01]		CALIPER ASSY-FRT BRAKE									
	48110 05013		S	S				L	1			WHIT PAD
	48110 050A0		S	S				L	1			WHITOUT PAD
	48140 05013		S	S				R	1			WHIT PAD
	48140 050A0		S	S				R	1			WHITOUT PAD
	[03]		PAD KIT SET-FRT BRAKE DISC									
	48130 05012		S	S					1			
	[04]		BOLT									
	48170 05001		S	S					4			
	[06]		GASKET-FRT BRAKE HOSE CALIPER									
	48716 03000		S	S					2			
	[07]		WASHER									
	93310 1200D		S	S					4			M12×1.75
	[09]		REPAIR KIT-FRT BRAKE CALIPER									
	481KT 05000		S	S					1			
	[12]		CLIP SET-CLIPER,MANDO SET=2									
	00000 00627		S	S					2			

4841

REAR BRAKE(DISC)

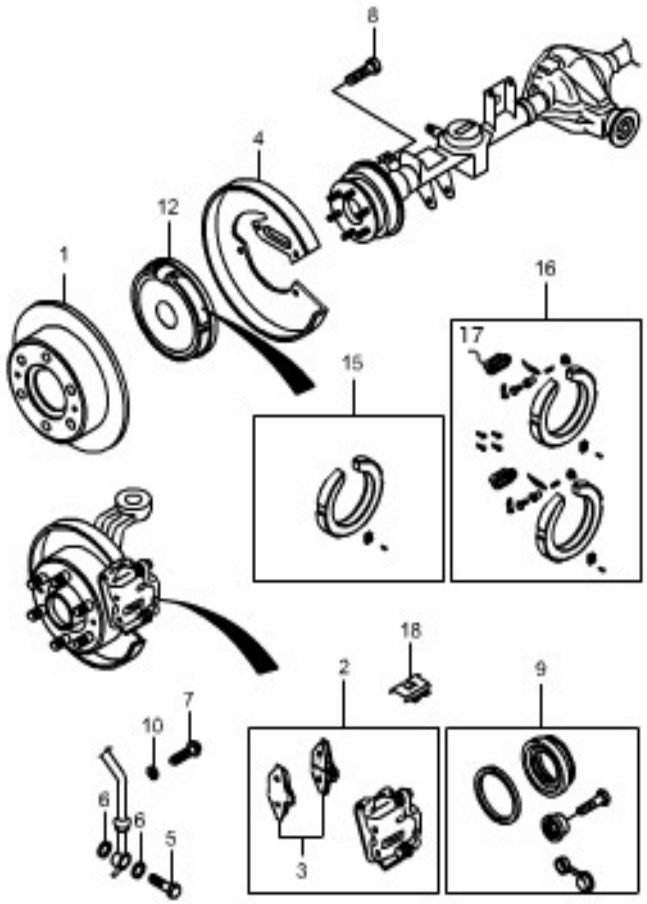

KEY NO.		PART NAME										
			ENGINE							APPLICATION		
ITC	PART NO.	T/M	G23D	G32D			OPTION	L/R	Q'TY	FROM	TO	REMARK
	[01]		DISC-RR BRAKE									
	48401 05102		S	S					2			
	[02]		CALIPER ASSY-RR CALIPER									
	48410 08001		S	S				L	1			
	48440 08001		S	S				R	1			
	[03]		PAD KIT SET-RR BRAKE DISC									
	48413 05051		S	S					1			
	[04]		SHIELD-RR DISC BRAKE DUST									
	48471 05000		S	S				L	1			
	48481 05000		S	S				R	1			
	[05]		EYE BOLT									
	48180 05000		S	S					2			
	[06]		GASKET-FRT BRAKE HOSE CALIPER									
	48716 03000		S	S					4			
	[07]		BOLT-CALIPER MTG RR									
	48491 05000		S	S					4			
	[08]		BOLT-DUST SHIELD									
	98274 0612D		S	S					8			M6×1.0 × 12
	[09]		REPAIR KIT-RR BRAKE CALIPER									
	484KT 05000		S	S					1			

4841

REAR BRAKE(DISC)

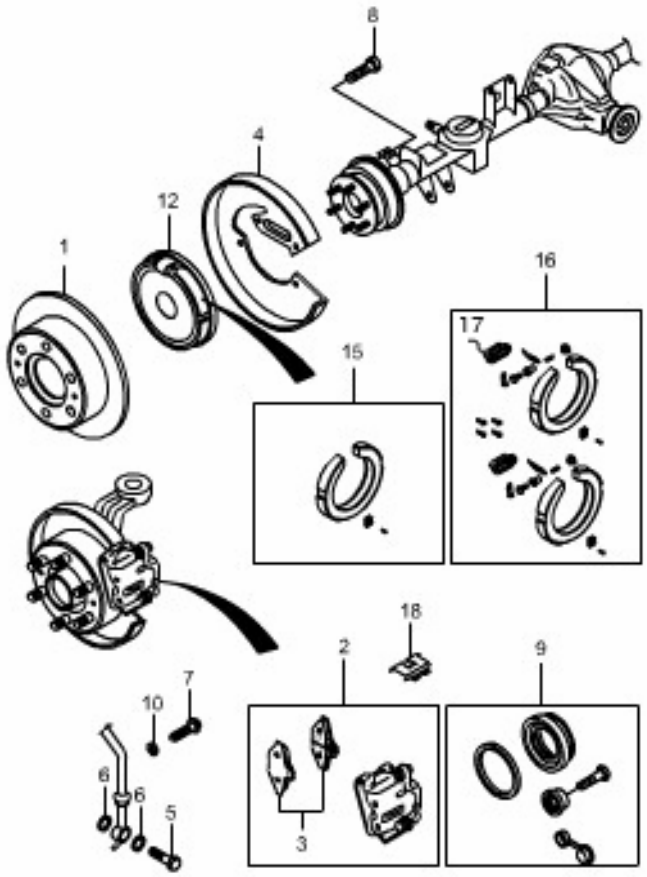

KEY NO.		PART NAME										
			ENGINE							APPLICATION		
I T C	PART NO.	T / M	G 2 3 D	G 3 2 D			OPTION	L / R	Q ' T Y	FROM	TO	REMARK
	[10]		WASHER									
	93310 1200D		S	S					4			
	[12]		BRAKE ASSY-RR DRUM									
	48340 05202		S	S				L	1			
	48310 05202		S	S				R	1			
	[15]		SHOE ASSY-P/BRAKE									
	483KT 05000		S	S					2			
	[16]		REPAIR KIT-P/BRAKE									
	483KT 05010		S	S					1			
	[17]		GROMMET									
	42099 050A0		S	S								
	[18]		CLIP RR SET-CLIPER,MANDO SET=2									
	00000 006AR		S	S					2			

4850

MASTER & BOOSTER CYLINDER

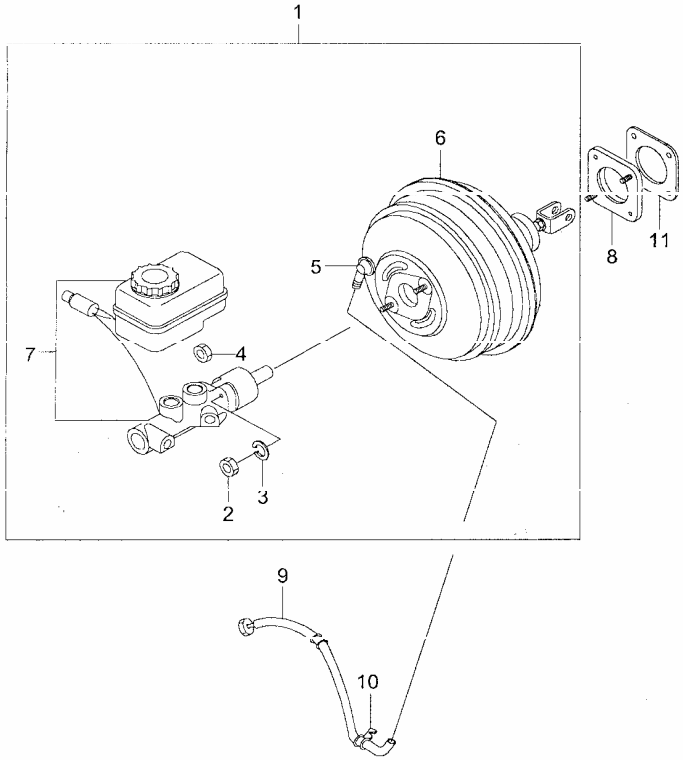

KEY NO.		PART NAME										
ITC	PART NO.	T/M	ENGINE G23D	ENGINE G32D	ENGINE	ENGINE	OPTION	L/R	Q'TY	APPLICATION FROM	APPLICATION TO	REMARK
	[01] 48500 05700		S	S			BOOSTER A-POWER BRAKE		1			
	[02] 48505 05000		S	S			NUT		2			
	[03] 48504 05000		S	S			WASHER		2			
	[04] 48503 05000		S	S			SEAL-'O'RING		1			
	[05] 48586 05000		S	S			VALVE-BOOSTER NONRETURN		1			
	[06] 48510 05500		S	S			BOOSTER A-POWER BRAKE		1			
	[07] 48540 05700		S	S			M/CYL A-POWER BRAKE		1			
	[08] 48520 05010		S	S			SPACER-BOOSTER MTG		1			
	[09] 48580 05200		S				HOSE A-BSTR VAC		1			
	48580 05620			S					1			

4850

MASTER & BOOSTER CYLINDER

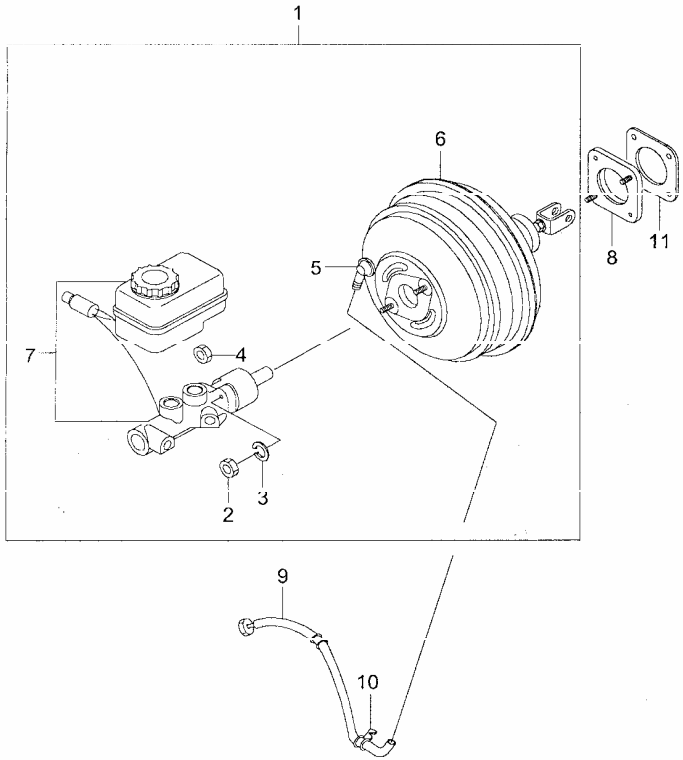

KEY NO.		PART NAME										
			ENGINE							APPLICATION		
ITC	PART NO.	T/M	G23D	G32D			OPTION	L/R	Q'TY	FROM	TO	REMARK
	[10] 48585 05600		CLIP-VACUUM HOSE MTG S						1			
	[11] 48582 06C00		SEAL-M/VAC MTG S	S					1			

4890

ABS SYSTEM(5.3)

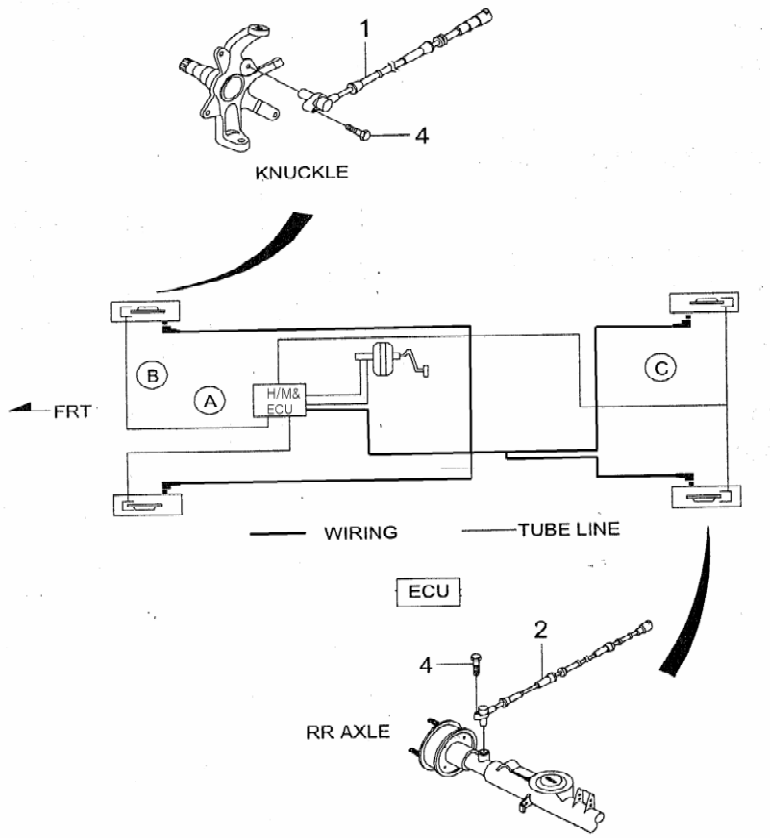

KEY NO.		PART NAME										
			ENGINE							APPLICATION		
ITC	PART NO.	T/M	G23D	G32D			OPTION	L/R	Q'TY	FROM	TO	REMARK
	[01] 48920 05100		SENSOR A-WHEEL SPEED FRT S	S					2			
	[02] 48930 05100		SENSOR A-WHEEL SPEED RR S	S					2			
	[04] 98264 0625D		SCREW-HEX SEMS S	S					4			M6 X 1.0 X 25

4891

HYDRAULIC MODULATOR(ABS 5.3)

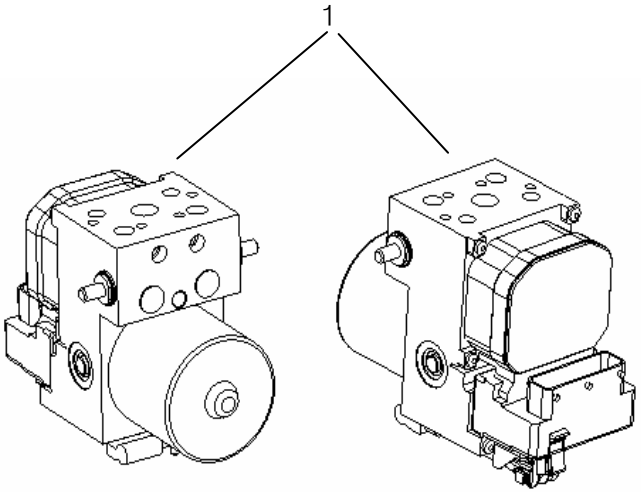

KEY NO.		PART NAME										
			ENGINE							APPLICATION		
ITC	PART NO.	T/M	G23D	G32D			OPTION	L/R	Q'TY	FROM	TO	REMARK
	[01] 48910 08000		MODULATOR-ABS HYDRAULIC S	S					1			

4910

PARKING BRAKE

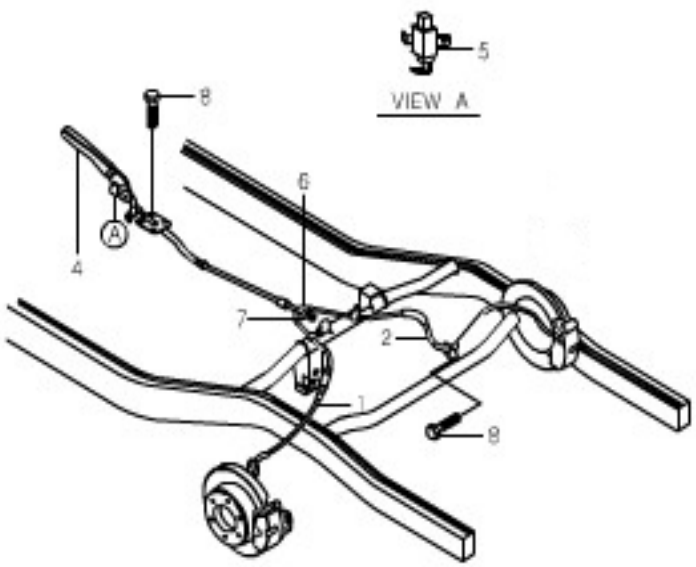

KEY NO.		PART NAME										
			ENGINE							APPLICATION		
ITC	PART NO.	T/M	G23D	G32D			OPTION	L/R	Q'TY	FROM	TO	REMARK
	[01] 49010 05121		CABLE A-P/BRK S	S				L	1			
	[02] 49020 05121		CABLE A-P/BRK S	S				R	1			
	[04] 49100 05503		LEVER A-PARKING BRAKE S	S				L	1			
	[05] 85720 05010		SWITCH A-P/BRAKE S	S					1			
	[06] 49226 03012		EQUALIZER-P/BRAKE CABLE S	S					1			
	[07] 49219 03012		HOLDER-NUT S	S					1			
	[08] 95717 0830D		BOLT-HEX SEMS S	S					8			M8×1.25×30

5 BODY

5110	BODY IN WHITE
5120	BODY MOUNTING
5210	SIDE & REAR BODY
5230	A PILLAR
5240	B PILLAR
5510	ROOF PANEL
5610	FRONT FLOOR PANEL
5620	REAR FLOOR PANEL
5710	FRONT PANEL
5720	FENDER & APRON PANEL
5730	DASH PANEL & COWL

5110

BODY IN WHITE

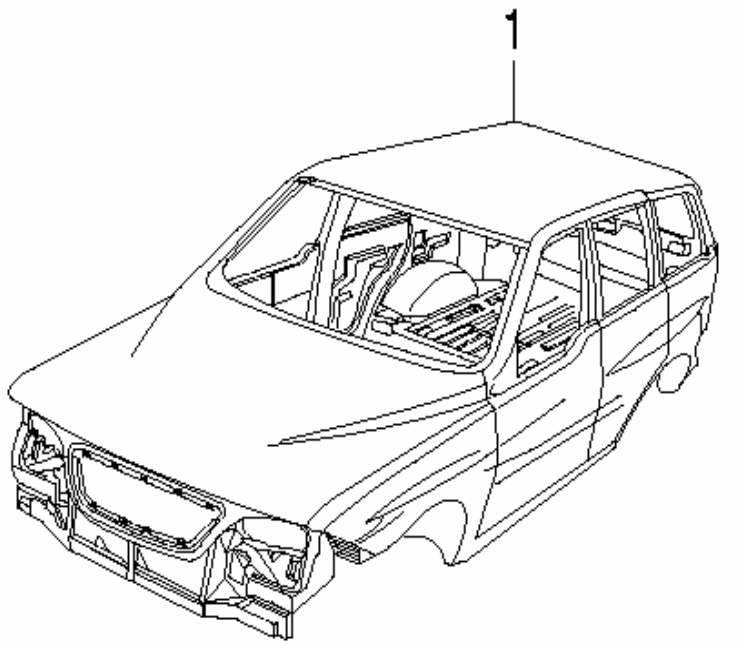

KEY NO.		PART NAME										
			ENGINE							APPLICATION		
ITC	PART NO.	T/M	G23D	G32D			OPTION	L/R	Q'TY	FROM	TO	REMARK
	[01]		BIW COMPL-H/ON									
	50030 05530		S						1			
	50030 05400			S					1			

5120

BODY MOUNTING

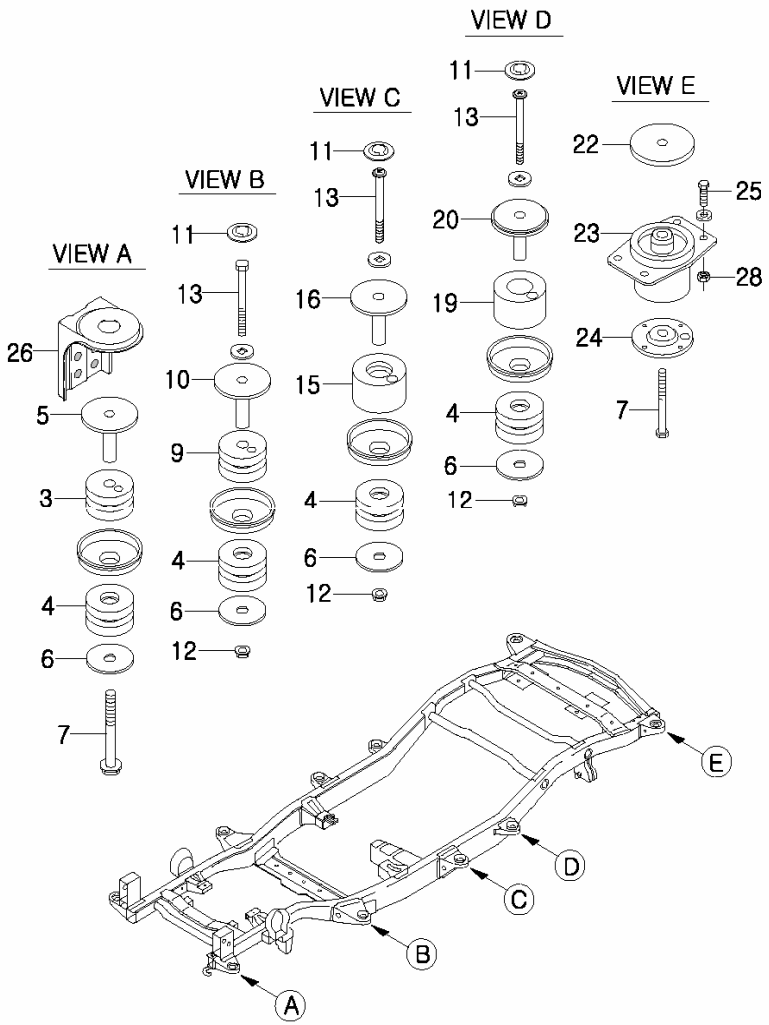

KEY NO.		PART NAME										
			ENGINE						APPLICATION		
ITC	PART NO.	T/M	G23D	G32D			OPTION	L/R	Q'TY	FROM	TO	REMARK
	[03] 60111 05000		INSULATOR-BODY MTG #1,UPR S	S					2			
	[04] 60112 05000		INSULATOR-BODY MTG #1,LWR S	S					8			
	[05] 60113 05000		WASHER&TUBE A-BODY MTG #1 S	S					2			
	[06] 60116 05000		WASHER-PLAIN BODY MTG S	S					8			
	[07] H5977 10101		BOLT-HEX SEMS S	S					4			M10×1.25×110
	[09] 60124 05000		INSULATOR-BODY MTG #2,UPR S	S					2			
	[10] 60123 05001		WASHER&TUBE A-BODY MTG #2 S	S					2			
	[11] 95140 40120		PLUG-BLIND S	S					6			M40×1.2
	[12] 92896 1000D		NUT-HEX FLG S	S					6			M10×1.25

5120

BODY MOUNTING

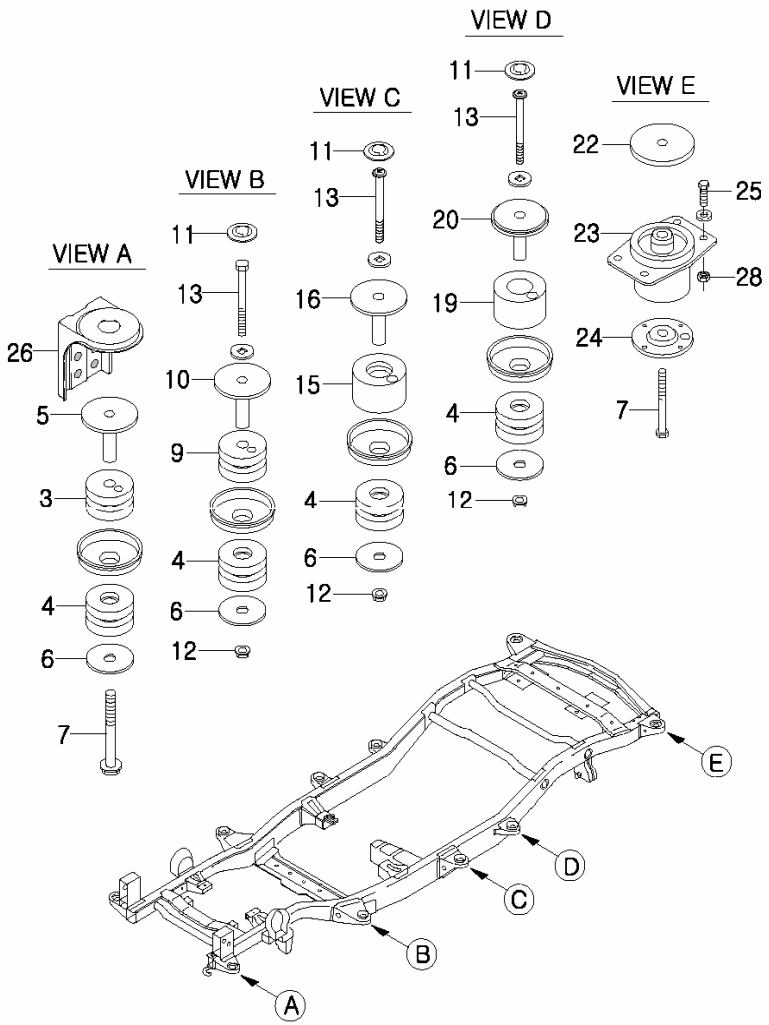

KEY NO.		PART NAME										
			ENGINE							APPLICATION		
ITC	PART NO.	T/M	G23D	G32D			OPTION	L/R	Q'TY	FROM	TO	REMARK
	[13]		BOLT-CUP SQ									
	H1647 10201		S	S					6			M10×1.25
	[15]		INSULATOR-BODY MTG #3,UPR									
	60131 05000		S	S					2			
	[16]		WASHER&TUBE A-BODY MTG #3									
	60133 05001		S	S					2			
	[19]		INSULATOR-BODY MTG #4,UPR									
	60141 05000		S	S					2			
	[20]		WASHER&TUBE A-BODY MTG #4									
	60143 05000		S	S					2			
	[22]		PLATE A-BODY MTG #5,UPR									
	60153 05001		S	S					2			
	[23]		INSULATOR A-BODY MTG #5,UPR									
	60156 05000		S	S					2			
	60156 05100		S	S					2			
	[24]		INSULATOR A-BODY MTG #5,LWR									
	60165 05000		S	S					2			
	60165 05100		S	S					2			
	[25]		BOLT-HEX SEMS									
	95817 0825D		S	S					16			M8×1.25×25

5120

BODY MOUNTING

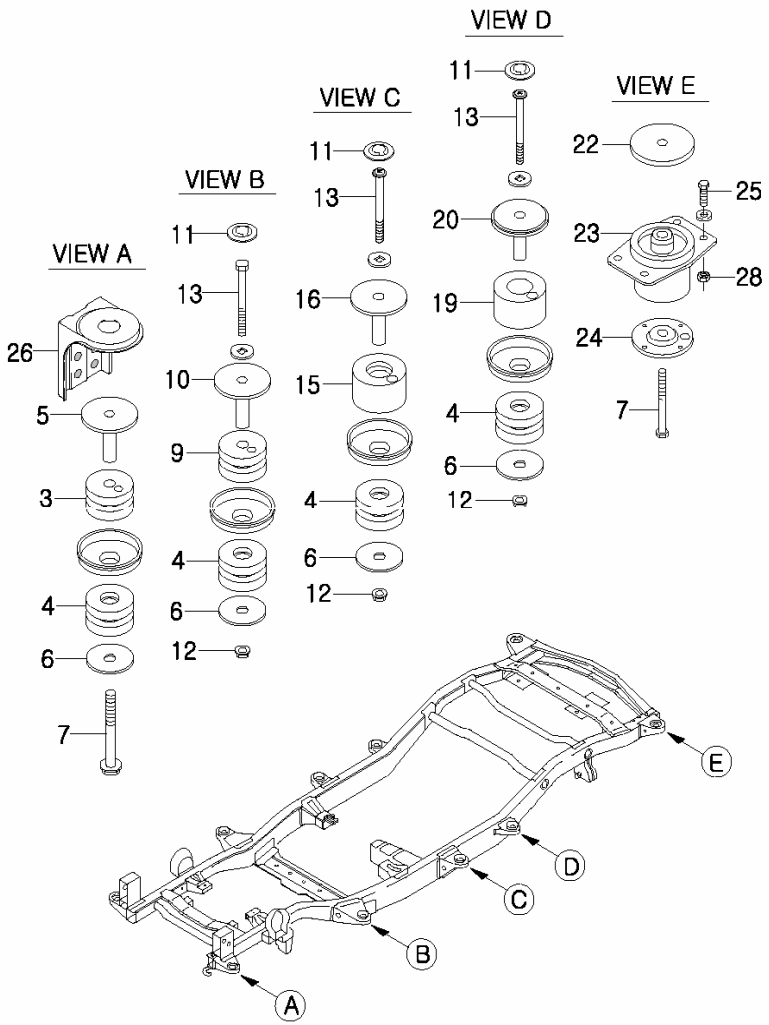

KEY NO.		PART NAME										
			ENGINE						APPLICATION		
ITC	PART NO.	T/M	G23D	G32D			OPTION	L/R	Q'TY	FROM	TO	REMARK
	[26] 57117 05000		BRKT-BODY MTG NO.1,LWR S	S					2			
	[28] 92944 08000		NUT-HEX PROJ S	S					8			M8×1.25

5210

SIDE & REAR BODY

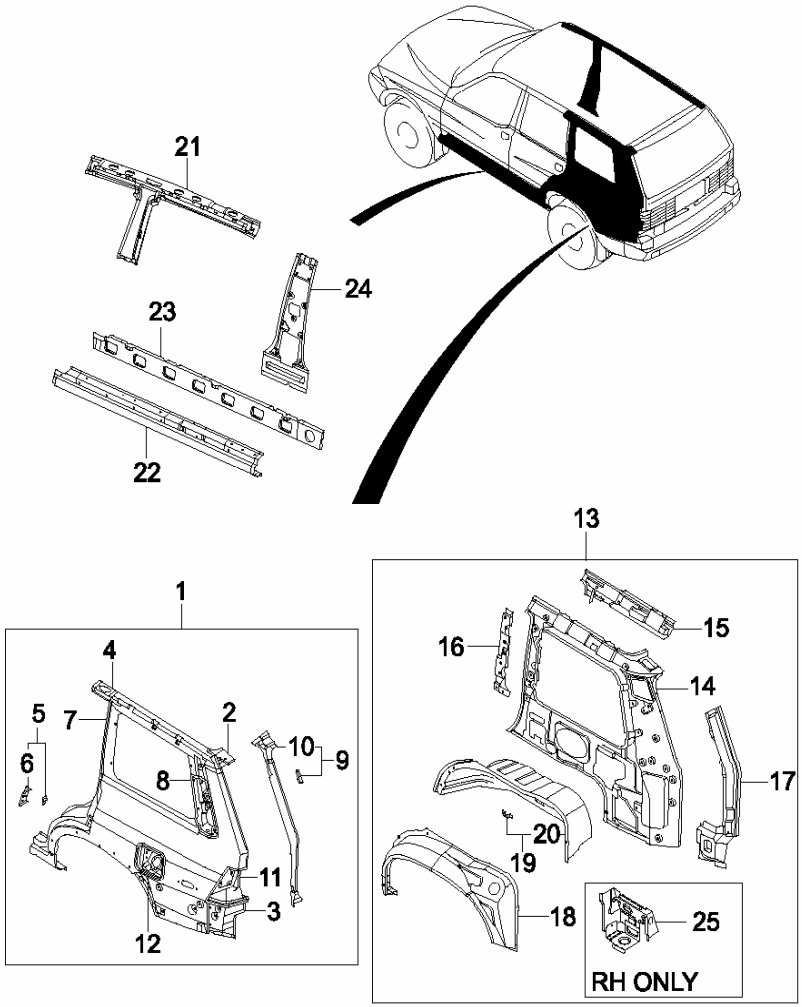

KEY NO.		PART NAME										
			ENGINE							APPLICATION		
ITC	PART NO.	T/M	G23D	G32D			OPTION	L/R	Q'TY	FROM	TO	REMARK
	[01]		PNL A-QUARTER OTR									
	52510 05104		S	S				L	1			
	52520 05103		S	S				R	1			
	[02]		EXTENSION-QUARTER OTR UPR									
	52533 05001		S	S				L	1			
	52543 05001		S	S				R	1			
	[03]		EXTENSION-QUARTER OTR LWR									
	52513 05003		S	S				L	1			
	52523 05003		S	S				R	1			
	[04]		EXTENSION-ROOF DRIP RAIL									
	52514 05000		S	S				L	1			
	52524 05000		S	S				R	1			
	[05]		REINF A-RR DR STRIKER									
	52527 05000		S	S					1			
	[06]		REINF-RR DR STRIKER									
	52528 05000		S	S					1			
	[07]		REINF-"C" PILLER OTR									
	52531 05000		S	S				L	1			
	52541 05000		S	S				R	1			

5210

SIDE & REAR BODY

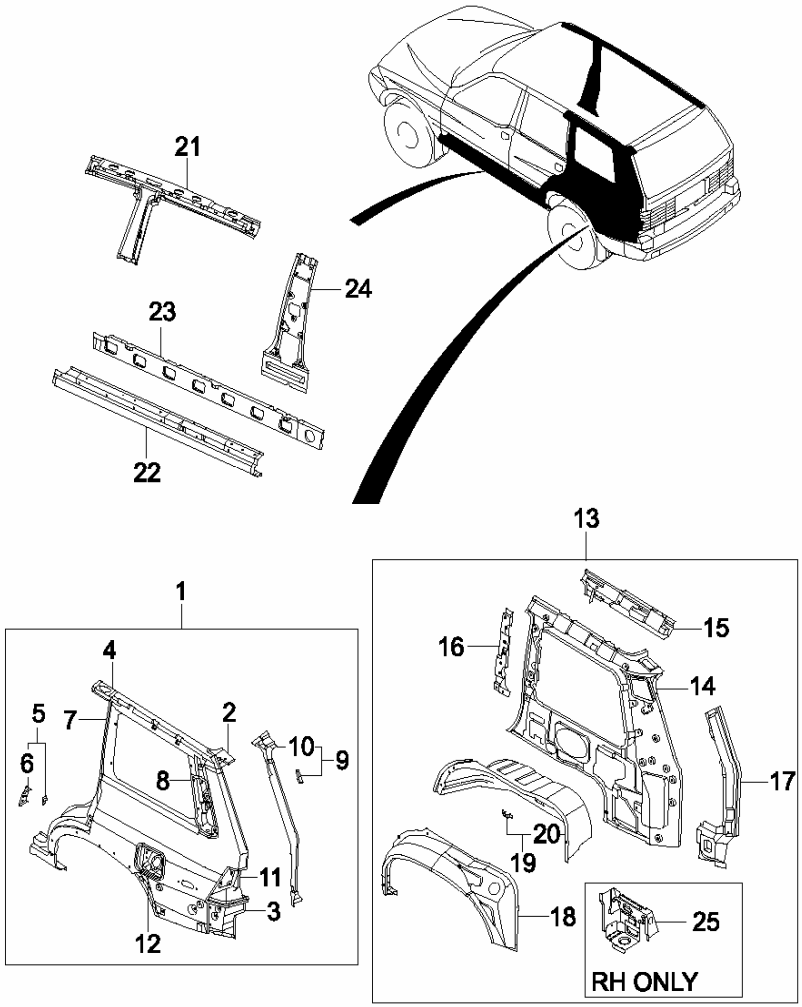

KEY NO.		PART NAME										
			ENGINE							APPLICATION		
ITC	PART NO.	T/M	G23D	G32D			OPTION	L/R	Q'TY	FROM	TO	REMARK
	[08]		PNL-WATER DEFLECTOR									
	52536 05010		S	S				L	1			
	52546 05001		S	S				R	1			
	[09]		PNL A-"D"PILLER OTR									
	52550 05101		S	S				L	1			
	52560 05101		S	S				R	1			
	[10]		PNL-"D" PILLER OTR,LH									
	52551 05101		S	S				L	1			
	52561 05101		S	S				R	1			
	[11]		HOUSING A-RR COMBI LAMP									
	52570 05001		S	S				L	1			
	52580 05001		S	S				R	1			
	[12]		HOUSING A-F/FILLER									
	52590 05000		S	S					1			
	[13]		QUARTER INR & WHEEL HOUSE A									
	52601 05103		S	S				L	1			
	52602 05104		S	S				R	1			
	[14]		PNL A-QUARTER INR COMPL									
	52605 05108		S	S				L	1			
	52606 05108		S	S				R	1			

5210

SIDE & REAR BODY

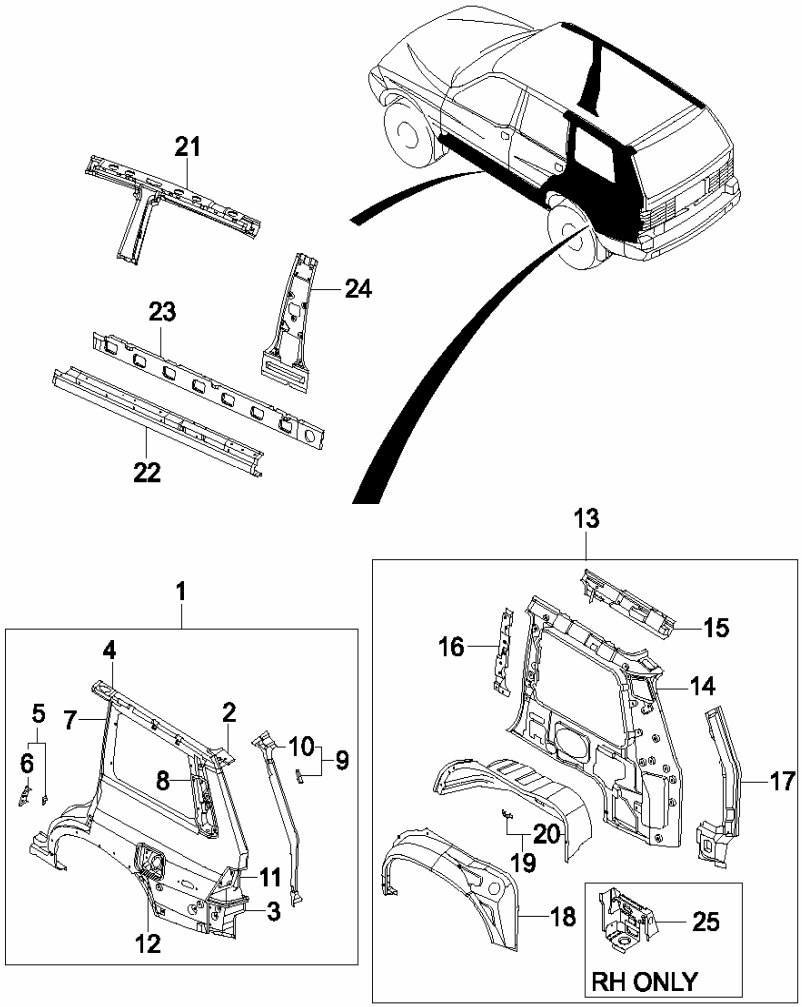

KEY NO.		PART NAME										
			ENGINE							APPLICATION		
ITC	PART NO.	T/M	G23D	G32D			OPTION	L/R	Q'TY	FROM	TO	REMARK
	[15]		REINF A-QUARTER INR UPR									
	52630 05502		S	S				L	1			
	52640 05502		S	S				R	1			
	[16]		REINF-"C" PILLER INR									
	52651 05601		S	S				L	1			
	52661 05001		S	S				R	1			
	[17]		REINF A-`D' PILLER INR									
	52655 05100		S	S				L	1			
	52665 05100		S	S				R	1			
	[18]		PNL-WHEEL HOUSE OTR									
	52711 05102		S	S				L	1			
	52721 05102		S	S				R	1			
	[19]		PNL A-WHEEL HOUSE INR									
	52730 05101		S	S				L	1			
	52740 05101		S	S				R	1			
	[20]		PNL-WHEEL HOUSE INR									
	52731 05100		S	S				L	1			
	52741 05100		S	S				R	1			
	[21]		RAIL A-ROOF SIDE									
	52107 05104		S	S				L	1			
	52108 05104		S	S				R	1			

5210

SIDE & REAR BODY

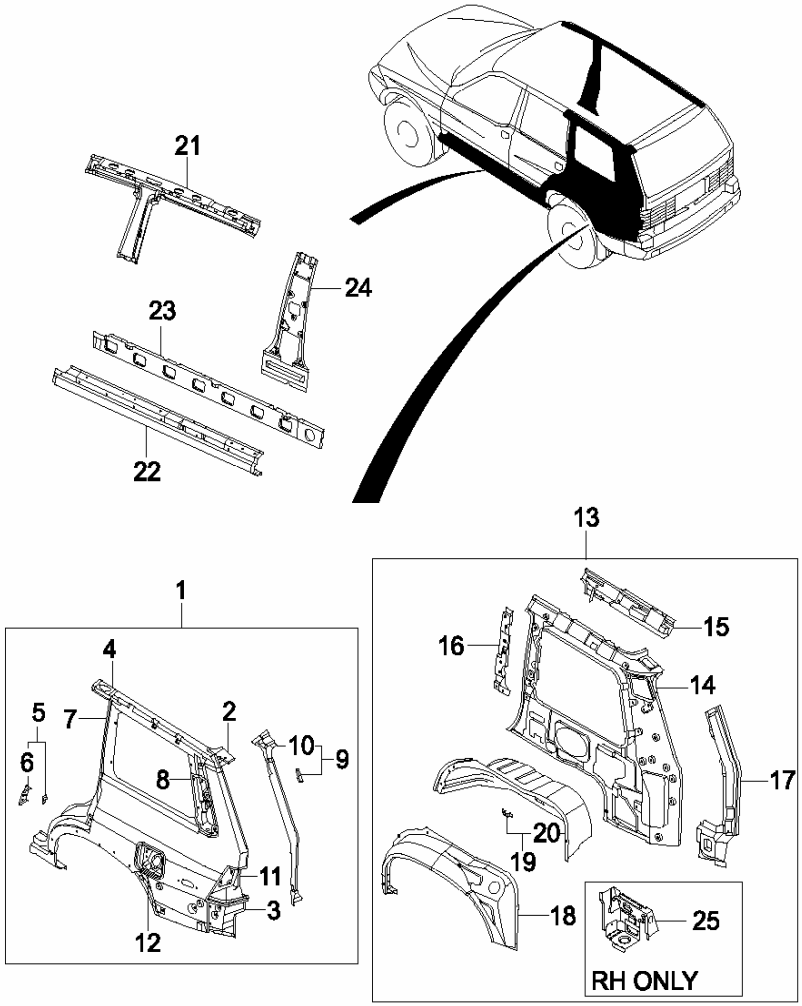

KEY NO.		PART NAME										
			ENGINE							APPLICATION		
ITC	PART NO.	T/M	G23D	G32D			OPTION	L/R	Q'TY	FROM	TO	REMARK
	[22]		PNL-SIDE SILL OTR									
	52371 05000		S	S				L	1			
	52381 05000		S	S				R	1			
	[23]		REINF-SIDE SILL OTR									
	52376 05100		S	S				L	1			
	52386 05100		S	S				R	1			
	[24]		PNL A-"B" PILLER INR									
	52430 05001		S	S				L	1			
	52440 05101		S	S				R	1			
	[25]		BRKT A-OVM TOOL MTG									
	R101D-0075		S	S					1			

5230

A PILLAR

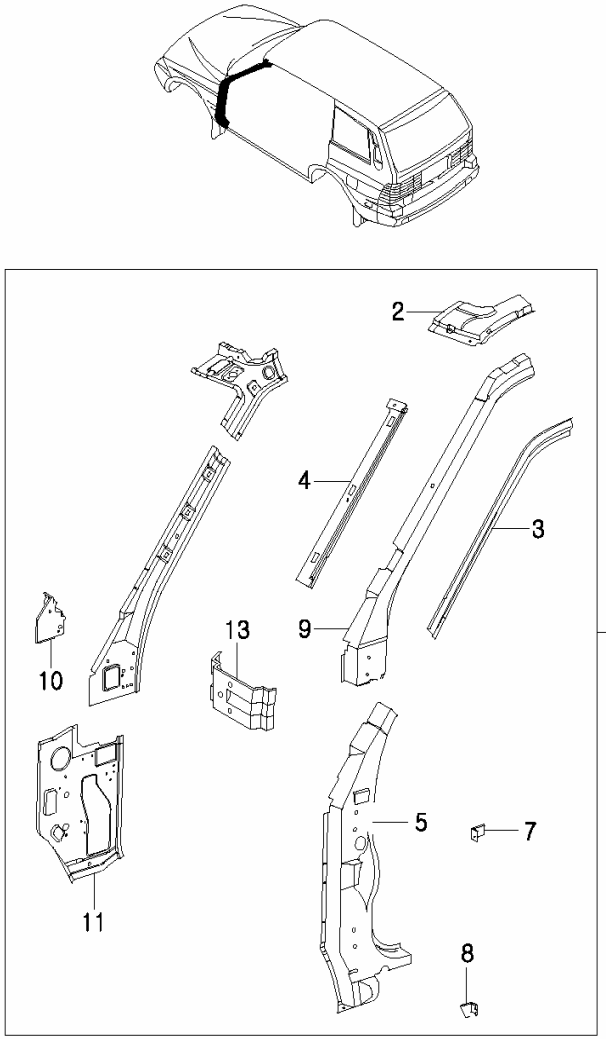

KEY NO.		PART NAME										
			ENGINE							APPLICATION		
ITC	PART NO.	T/M	G23D	G32D			OPTION	L/R	Q'TY	FROM	TO	REMARK
	[01]		PILLER A-"A"									
	52101 05037		S	S				L	1			
	52102 05037		S	S				R	1			
	[02]		EXTENSION-"A" PILLER OTR UPR									
	52276 05001		S	S				L	1			
	52286 05001		S	S				R	1			
	[03]		PILLER-"A" OTR UPR									
	52111 05001		S	S				L	1			
	52121 05001		S	S				R	1			
	[04]		RAIL-ROOF DRIP FRT									
	52113 05001		S	S				L	1			
	52123 05001		S	S				R	1			
	[05]		PILLER-"A" OTR LWR									
	52131 05002		S	S				L	1			
	52141 05002		S	S				R	1			
	[07]		BRKT-A FENDER MTG TO A PLR UPR									
	52115 05000		S	S				L	1			
	52125 05000		S	S				R	1			
	[08]		BRKT-A FENDER MTG TO A PLR LWR									
	52155 05000		S	S				L	1			
	52165 05000		S	S				R	1			

5230

A PILLAR

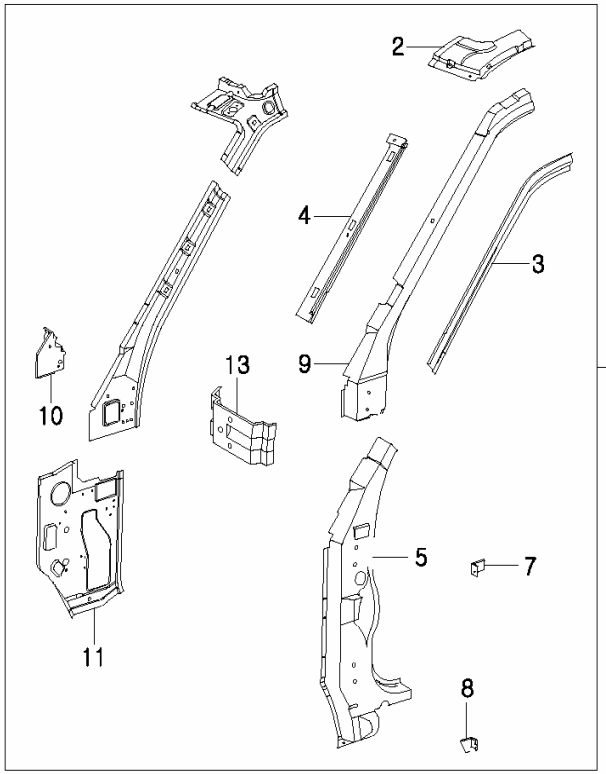

KEY NO.		PART NAME										
			ENGINE							APPLICATION		
ITC	PART NO.	T/M	G23D	G32D			OPTION	L/R	Q'TY	FROM	TO	REMARK
	[09]		REINF-"A" PILLER UPR									
	52151 05001		S	S				L	1			
	52161 05001		S	S				R	1			
	[10]		BRKT-COWL CROSS MBR MTG									
	51551 05000		S	S				L	1			
	51561 05000		S	S				R	1			
	[11]		PNL A-COWL SIDE INR									
	52250 05026		S	S				L	1			
	52260 05026		S	S				R	1			
	[13]		REINF-FRT DR HGE UPR									
	52137 05000		S	S				L	1			
	52147 05000		S	S				R	1			

5240

B PILLAR

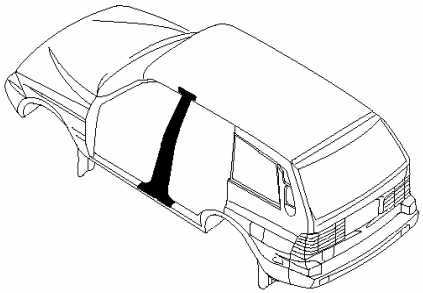

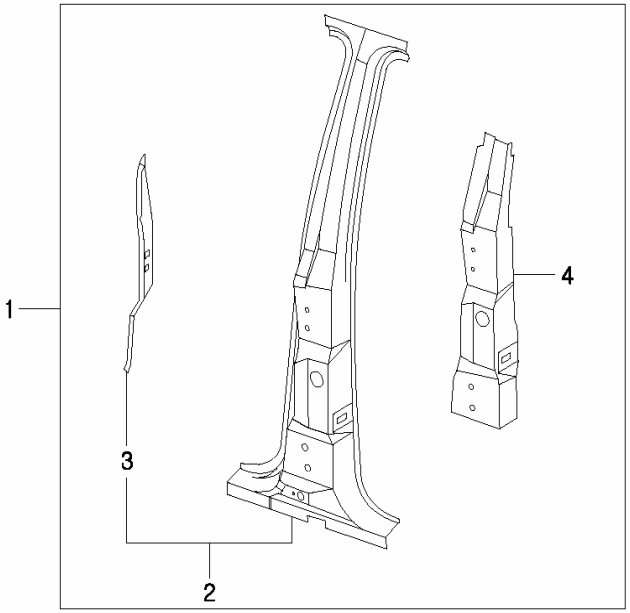

KEY NO.		PART NAME										
			ENGINE							APPLICATION		
I T C	PART NO.	T / M	G 2 3 D	G 3 2 D			OPTION	L / R	Q ' T Y	FROM	TO	REMARK
	[01]		PILLER A-"B"									
	52301 05102		S	S				L	1			
	52302 05102		S	S				R	1			
	[02]		PILLER-"B" OTR									
	52311 05101		S	S				L	1			
	52321 05101		S	S				R	1			
	[03]		EXTENSION-"B" PILLER SEALG									
	52312 05100		S	S				L	1			
	52322 05100		S	S				R	1			
	[04]		REINF A-"B" PILLER OTR									
	52330 05100		S	S				L	1			
	52340 05100		S	S				R	1			

5510

ROOF PANEL

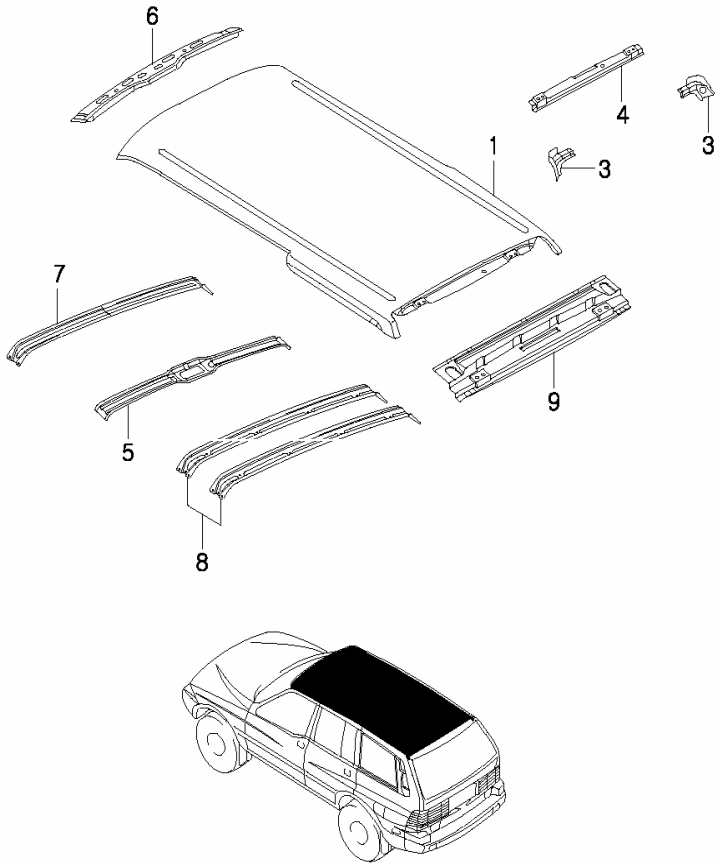

KEY NO.		PART NAME										
			ENGINE							APPLICATION		
ITC	PART NO.	T/M	G23D	G32D			OPTION	L/R	Q'TY	FROM	TO	REMARK
	[01]		PNL-ROOF									
	55111 05002		S	S			ROOF RACK.		1			
	55111 05022		S	S			ROOF RACK.		1			
	[03]		EXTENSION-ROOF RR									
	55112 05000		S	S				L	1			
	55122 05000		S	S				R	1			
	[04]		RAIL-ROOF DRIP,RR									
	55121 05000		S	S					1			
	[05]		RAIL-ROOF CTR NO.2									
	55331 05000		S	S					1			
	[06]		RAIL A-ROOF FRT									
	55310 05010		S	S					1			
	[07]		RAIL-ROOF CTR NO.1									
	55321 05001		S	S					1			
	[08]		RAIL-ROOF CTR NO.3									
	55341 05003		S	S					1			
	[09]		RAIL A-ROOF RR									
	55350 05101		S	S					1			

5610

FRONT FLOOR PANEL

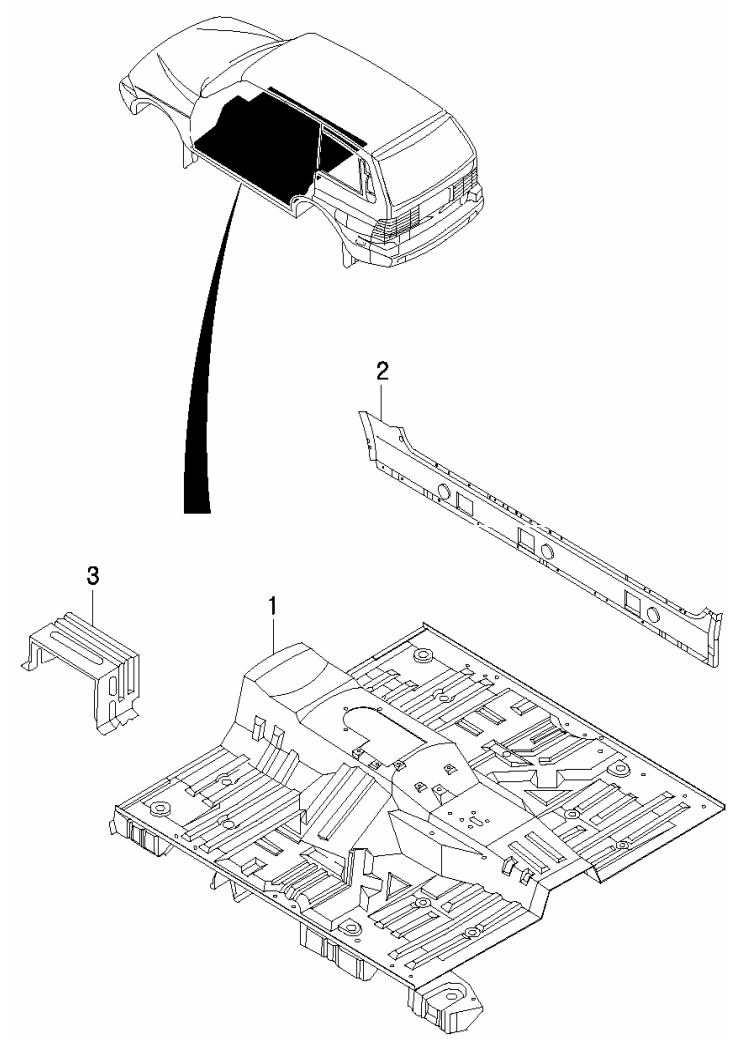

KEY NO.		PART NAME										
			ENGINE							APPLICATION		
ITC	PART NO.	T/M	G23D	G32D			OPTION	L/R	Q'TY	FROM	TO	REMARK
	[01]		PNL A-FRT FLR									
	56110 05127		S	S					1			
	[02]		PNL A-SIDE SILL INR									
	56710 05004		S	S				L	1			
	56760 05004		S	S				R	1			
	[03]		BRKT A-FOOT REST									
	57512 05001		S	S					1			

5620

REAR FLOOR PANEL

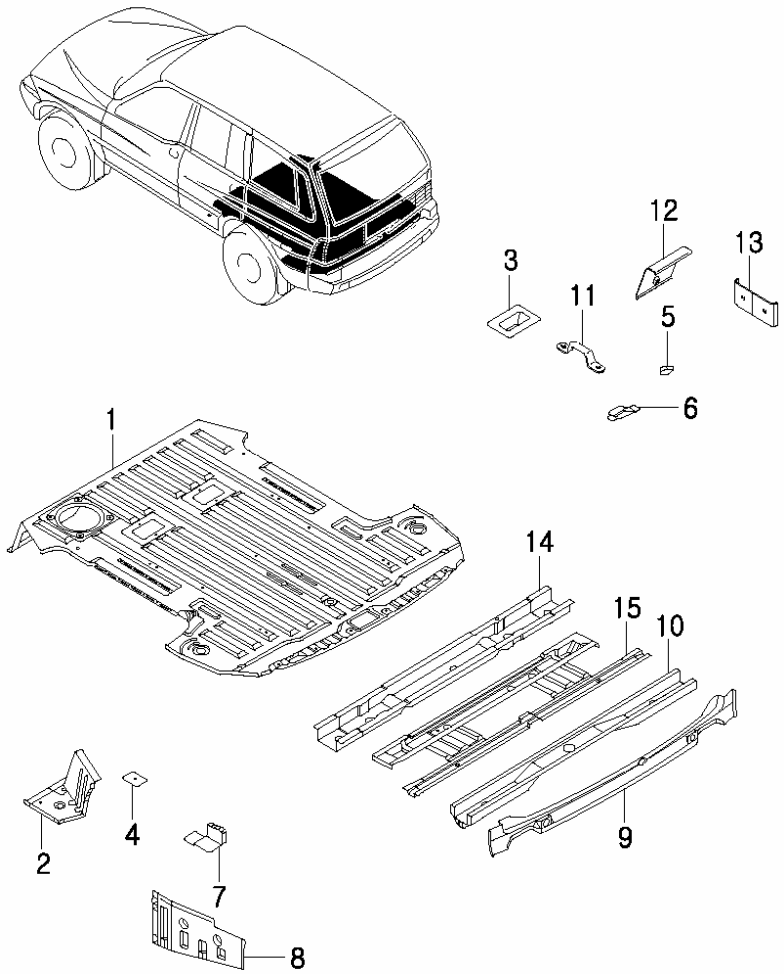

KEY NO.		PART NAME										
			ENGINE							APPLICATION		
ITC	PART NO.	T/M	G23D	G32D			OPTION	L/R	Q'TY	FROM	TO	REMARK
	[01]		PNL-RR FLOOR									
	56511 05112		S	S					1			
	[02]		EXTENSION A-INTERM FLOOR									
	56513 05001		S	S				L	1			
	56533 05001		S	S				R	1			
	[03]		REINF-RR SEAT STRIKER MTG									
	56522 05000		S	S					2			
	[04]		BRKT A-SEAT BELT ANCHOR MTG									
	56523 05000		S	S					2			
	[05]		BRKT-TAILGATE GUIDE BUMPER NO.2									
	56558 05000		S	S					2			
	[06]		REINF-TAIL GATE GUIDE BUMPER BRKT									
	56559 05000		S	S				L	1			
	56569 05000		S	S				R	1			
	[07]		BRKT-BODY MTG #5									
	56552 05100		S	S				L	1			
	56562 05100		S	S				R	1			
	[08]		EXTENSION-RR FLOOR SIDE									
	56582 05000		S	S				L	1			
	56586 05000		S	S				R	1			

5620

REAR FLOOR PANEL

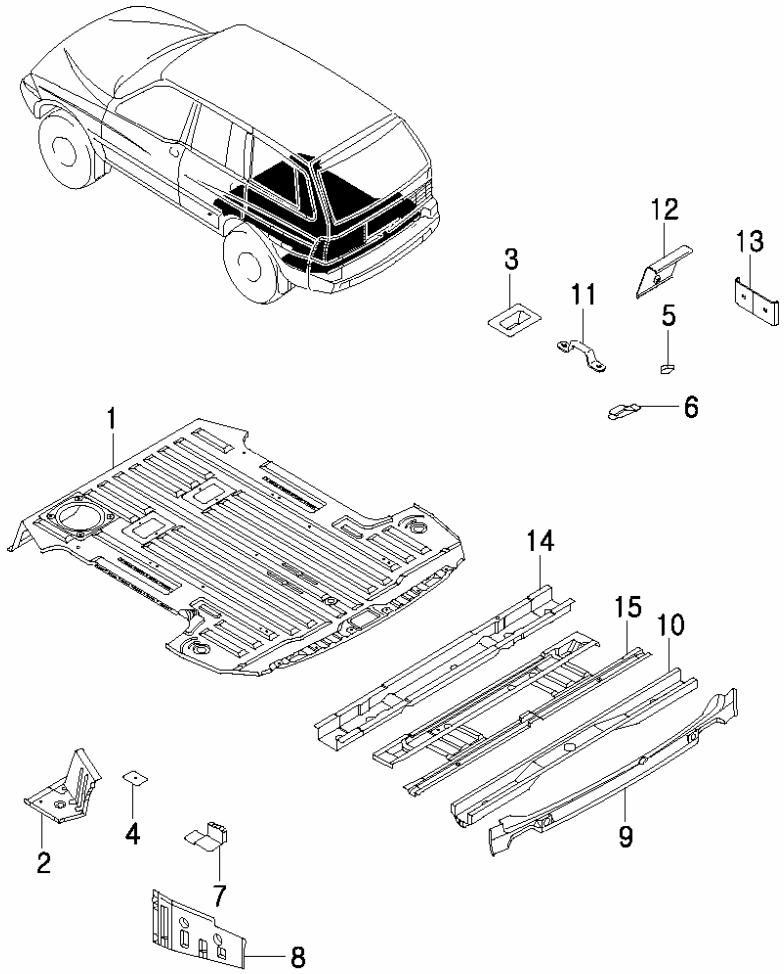

KEY NO.		PART NAME										
			ENGINE							APPLICATION		
ITC	PART NO.	T/M	G23D	G32D			OPTION	L/R	Q'TY	FROM	TO	REMARK
	[09] 54111 05101		PNL-BACK OTR S	S					1			
	[10] 56530 05012		MEMBER A-RR FLOOR SUB S	S					1			
	[11] 56115 03100		LOOP-RR SEAT BACK HOLDG S	S					1			
	[12] 56515 05001		REINF A-RR SEAT HINGE MTG S	S					2			
	[13] 56591 05000		BRKT A-LUGGAGE MTG S	S					4			
	[14] 56571 05010		MEMBER A-RR FLOOR REINF #1 S	S					1			
	[15] 56575 05032		MEMBER A-RR FLOOR REINF #2 S	S					1			

5710

FRONT PANEL

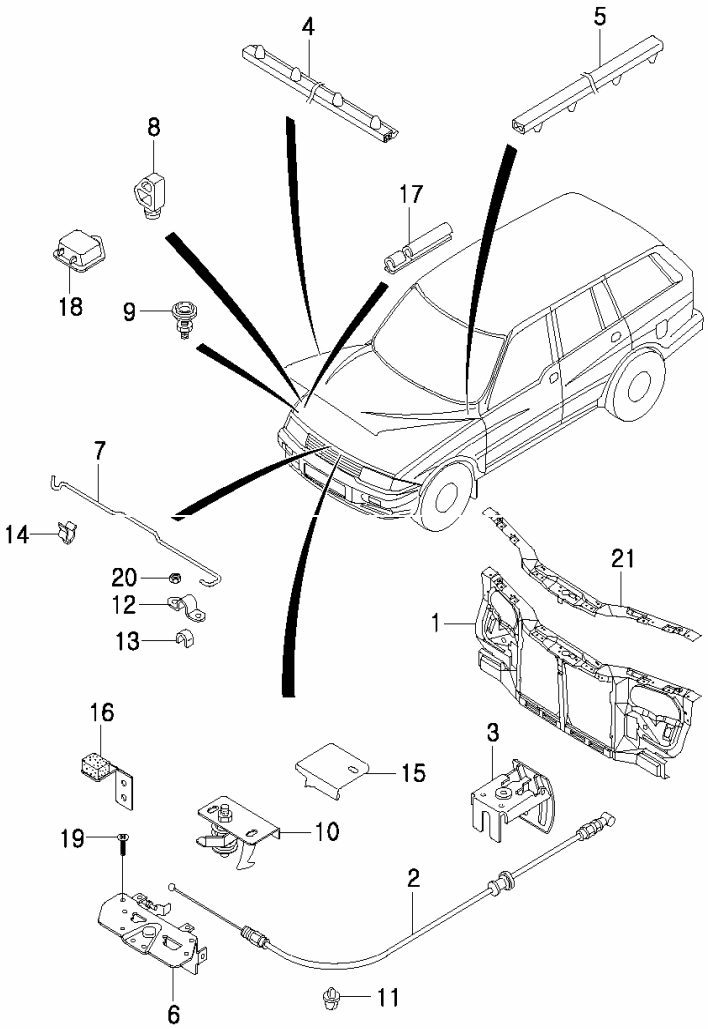

KEY NO.		PART NAME										
			ENGINE						APPLICATION		
ITC	PART NO.	T/M	G23D	G32D			OPTION	L/R	Q'TY	FROM	TO	REMARK
	[01] 57100 05108		S	S					1			
	[02] 71120 05003		S	S					1			
	[03] 71130 05000		S	S					1			
	[04] 71140 05050		S	S				L	1			
	[05] 71150 05050		S	S				R	1			
	[06] 71110 06002		S	S					1			
	[07] 71171 05050		S	S					1			
	[08] 71180 05000		S	S					2			
	[09] 71181 05001		S	S					2			

5710

FRONT PANEL

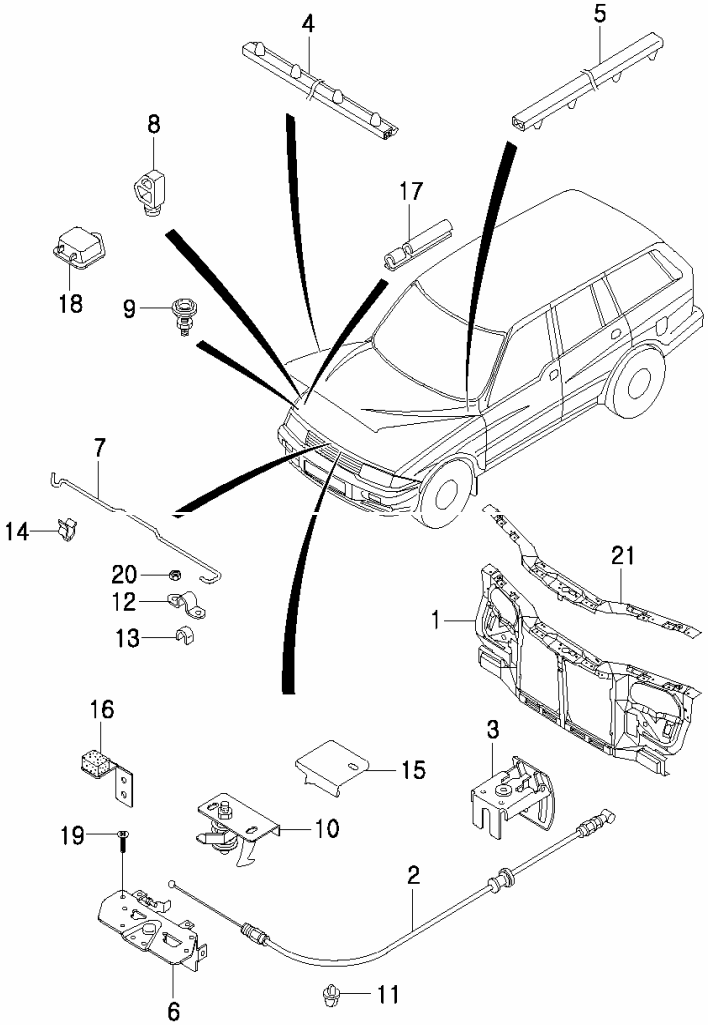

KEY NO.		PART NAME										
			ENGINE							APPLICATION		
ITC	PART NO.	T/M	G23D	G32D			OPTION	L/R	Q'TY	FROM	TO	REMARK
	[10] 71190 05050		S	S					1			
	[11] 71628 05000		S	S					4			
	[12] 72152 01001		S	S					1			
	[13] 72153 21000		S	S					1			
	[14] 71173 05000		S	S					1			
	[16]											
	71142 05002		S	S				L	1			
	71152 05002		S	S				R	1			
	[18] 71172 05000		S	S					1			
	[19] 98297 0620D		S	S					3			M6×1.0×20
	[20] 92884 0600D		S	S					2			M6×1.0

STRIKER & S/HOOK A-HOOD
CLIP-F/FLR DR REL CABLE
BRKT-HOOD STAY ROD MTG #1
RETAINER-HOOD STAY ROD
CLIP-HOOD STAY ROD
BUMPER A-HOOD CORNER SEALG RR
HOLDER-HOOD STAY ROD
SCREW-HEX SEMS
NUT-HEX FLG

5710

FRONT PANEL

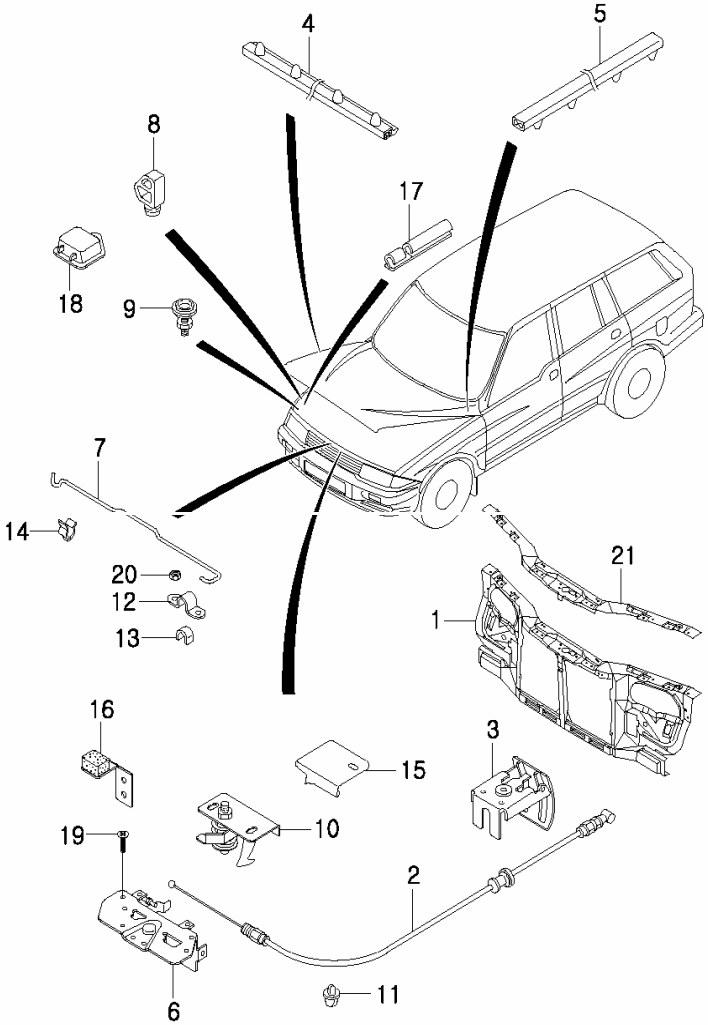

KEY NO.		PART NAME										
			ENGINE							APPLICATION		
ITC	PART NO.	T/M	G23D	G32D			OPTION	L/R	Q'TY	FROM	TO	REMARK
	[21] 57114 05005		REINF A-FRT END UPR S	S					1			

5720

FENDER & APRON PANEL

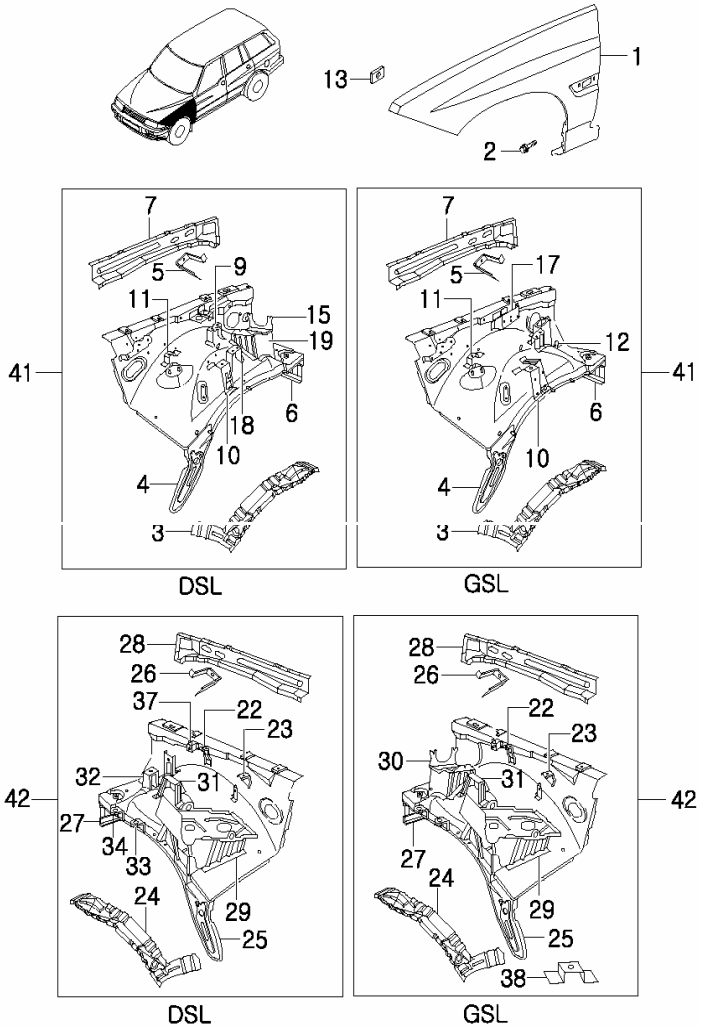

KEY NO.		PART NAME										
			ENGINE							APPLICATION		
ITC	PART NO.	T/M	G23D	G32D			OPTION	L/R	Q'TY	FROM	TO	REMARK
	[01]		PNL-FENDER									
	51811 05224		S	S			GARNISH-NARROW	L	1			
	51811 05602		S	S			GARNISH-WIDE	L	1			
	51821 05224		S	S			GARNISH-NARROW	R	1			
	51821 05602		S	S			GARNISH-WIDE	R	1			
	[02]		BOLT-FLANGE									
	61819 05001		S	S					18			M6×1.0×20
	[03]		REINF-F/APRON LWR									
	57379 05000		S	S				L	1			
	[04]		EXTENTION-FRONT APRON RR LWR									
	57313 05000		S	S				L	1			
	[05]		BRKT A-FENDER MTG									
	57314 05001		S	S				L	1			
	[06]		BRKT A-BODY MTG #1									
	57316 05000		S	S				L	1			
	[07]		MEMBER-FRONT APRON UPR									
	57331 05002		S	S				L	1			
	[10]		BRKT A-RELAY BOX MTG									
	57334 05041		S	S					1			

5720

FENDER & APRON PANEL

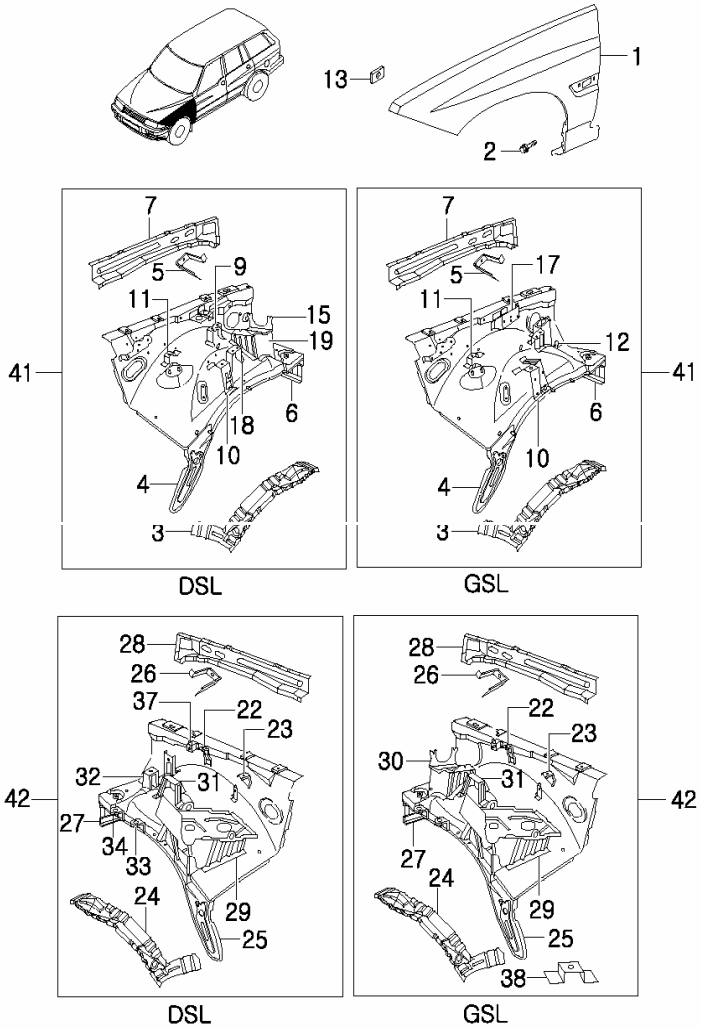

KEY NO.		PART NAME										
ITC	PART NO.	T/M	ENGINE G23D	ENGINE G32D	ENGINE	ENGINE	OPTION	L/R	Q'TY	APPLICATION FROM	APPLICATION TO	REMARK
	[11] 57336 05000		BRKT A-RELAY BOX MTG SIDE S	S					1			
	[12] 57436 05020		BRKT-WIND/RESERVIOR MTG S	S					1			
	[13] 51891 05000		PAD-FENDER MTG SEALING S	S					8			
	[15] 57360 05032		BRKT A-ABS 5.3 MODUL MTG S	S					1			
	[18] 57422 05020		BRKT A-CANISTER MTG S	S					1			
	[19] 57446 05040		BRKT A-JOINT BOX MTG						1			
	[22] 57372 05000		BRKT A-RADIATOR RESERVIOR FRT UPR MTG S	S					1			
	[23] 57374 05000		BRKT A-RADIATOR RESERVIOR RR UPR MTG S	S					1			
	[24] 57379 05000		REINF-FRT/APRON LWR S	S				L	1			
	57389 05000		S	S				R	1			

5720

FENDER & APRON PANEL

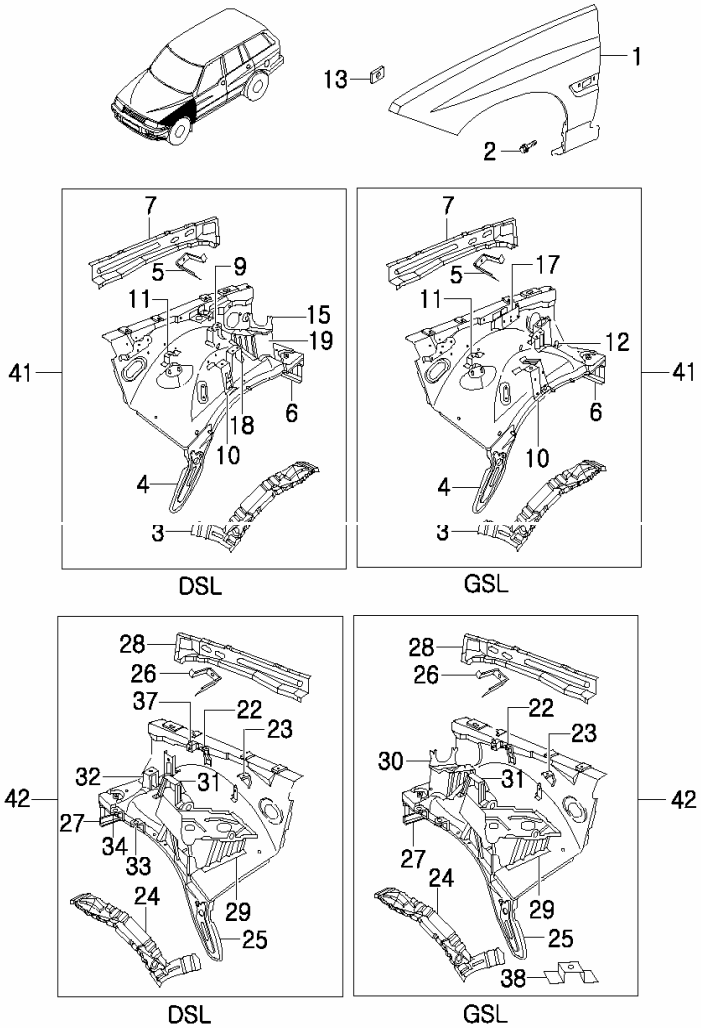

KEY NO.		PART NAME										
			ENGINE							APPLICATION		
ITC	PART NO.	T/M	G23D	G32D			OPTION	L/R	Q'TY	FROM	TO	REMARK
	[25] 57323 05000		EXTENSION-FRT/APRON RR LWR S	S				R	1			
	[26] 57324 05001		BRKT A-FENDER MTG S	S				R	1			
	[27] 57326 05000		BRKT A-BODY MTG #1 S	S				R	1			
	[28] 57341 05002		MEMBER-FRT/APRON UPR S	S				R	1			
	[29] 57350 05024		PLATE A-BATTERY TRAY S	S					1			
	[30] 57360 05032		BRKT A-ABS 5.3 MODUL MTG S	S					1			
	[31] 57376 05001		BRKT A-RADIATOR RESERVIOR LWR MTG S	S					1			
	57376 05040								1			
	[32] 57416 05010		BRKT A-AIR/CLEANER MTG #1 S	S					1			
									1			
	[34] 57428 05011		REINF A-A/CLEANER #3 S	S					1			

5720

FENDER & APRON PANEL

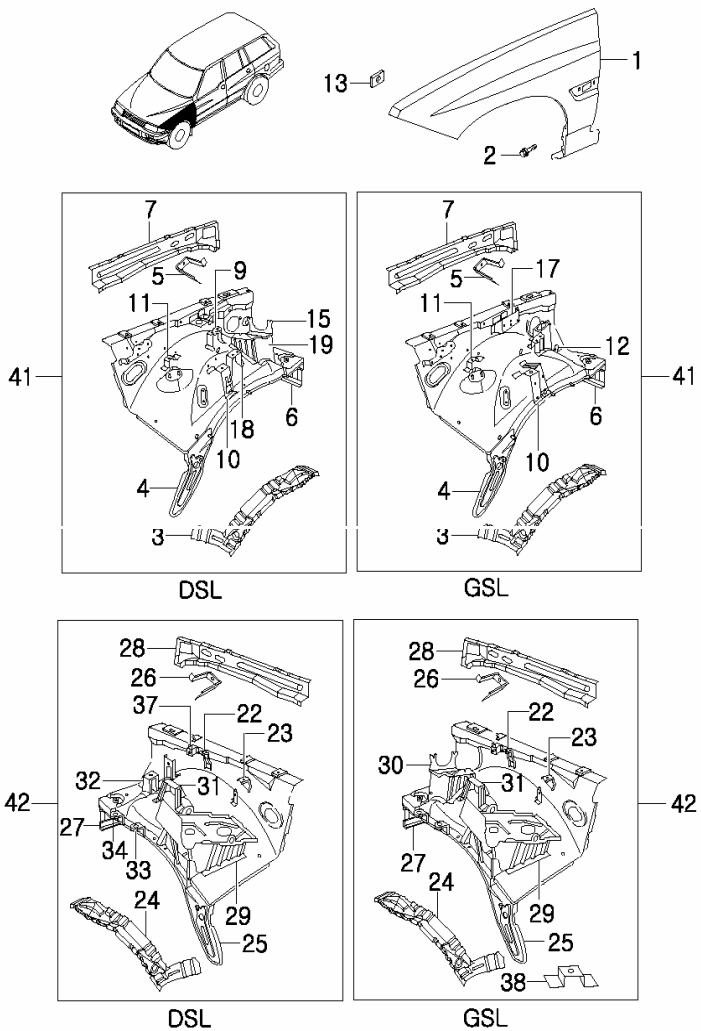

KEY NO.		PART NAME										
I T C	PART NO.	T / M	ENGINE G 2 3 D	ENGINE G 3 2 D	ENGINE	ENGINE	OPTION	L / R	Q ' T Y	APPLICATION FROM	APPLICATION TO	REMARK
	[38] 57445 05040		BRKT-MAKE UP HOSE MTG S	S					1			
	[41] 57301 05247		PNL A-FRT/APRON COMPL S	S					1			
	[42] 57302 05263		PNL A-FRT/APRON COMPL S	S					1			

5730

DASH PANEL & COWL

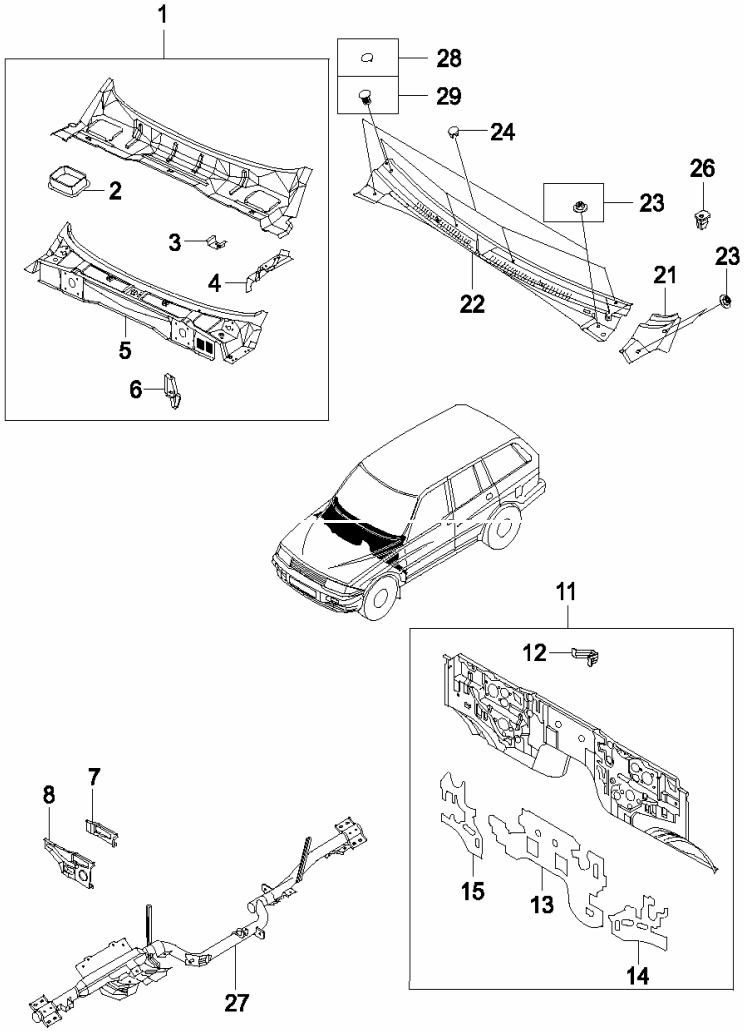

KEY NO.		PART NAME										
			ENGINE							APPLICATION		
ITC	PART NO.	T/M	G23D	G32D			OPTION	L/R	Q'TY	FROM	TO	REMARK
	[01]		PNL A-COWL COMPL									
	51301 05303		S	S					1			
	[02]		BRKT-AIR PLENUM CHAMBER									
	51313 05011		S	S					1			
	[03]		BRKT A-CLUTCH PEDAL BOX MTG									
	51355 05000		S	S					1			
	[04]		SUPT A-COWL SIDE UPR									
	51350 05001		S	S				L	1			
	51360 05001		S	S				R	1			
	[05]		PNL A-COWL,UPR									
	51370 05101		S	S					1			
	[06]		EXTENSION-COWL UPR SIDE									
	51373 05000		S	S				L	1			
	51383 05000		S	S				R	1			
	[07]		MEMBER-COWL SIDE UPR									
	51931 05000		S	S				L	1			
	51941 05000		S	S				R	1			
	[08]		MEMBER-COWL SIDE UPR OTR									
	51933 05003		S	S				L	1			
	51943 05002		S	S				R	1			

5730

DASH PANEL & COWL

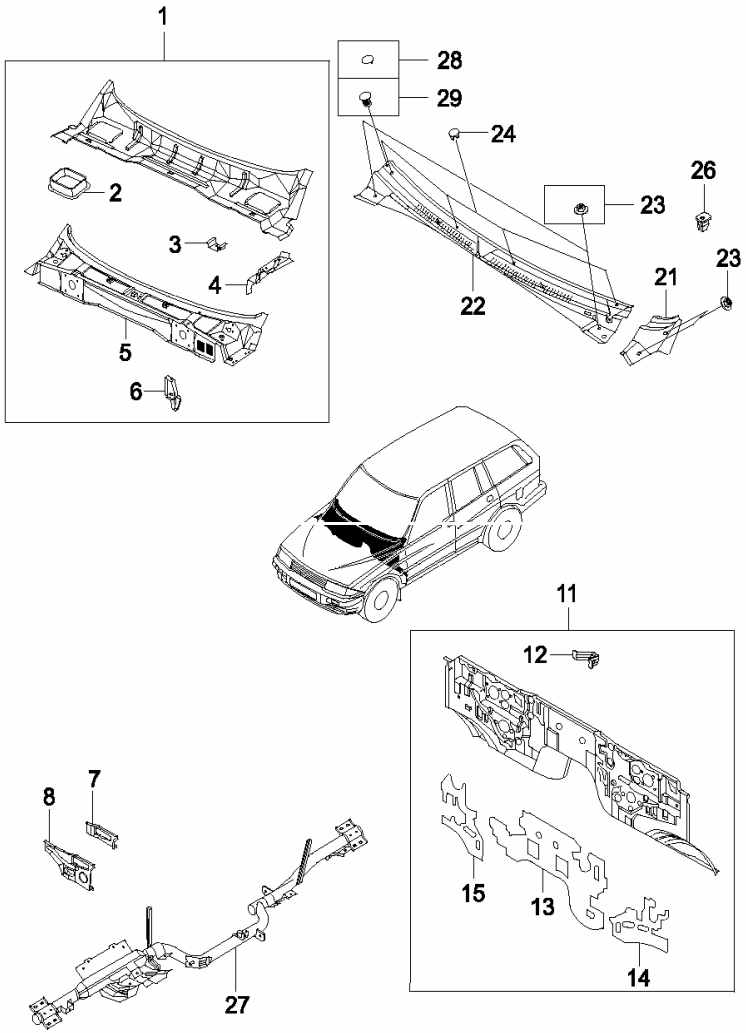

KEY NO.		PART NAME										
			ENGINE							APPLICATION		
ITC	PART NO.	T/M	G23D	G32D			OPTION	L/R	Q'TY	FROM	TO	REMARK
	[11]		PNL A-DASH COMPL									
	57500 05109		S	S			MANUAL,5SPEED					
	57500 05117		S	S			AUTO,4SPEED					
	[12]		BRKT A-BLOWER MTG									
	57534 05000		S	S					1			
	[13]		DEADENING SHT-DASH PNL,CTR									
	57551 05002		S	S					1			
	[14]		DEADENING SHT-DASH PNL									
	57552 05000		S	S				L	1			
	[15]		DEADENING SHT-DASH PNL									
	57553 05000		S	S				R	1			
	[21]		COVER A-COWL TOP CNR									
	79411 05003		S	S				L	1			
	79421 05003		S	S				R	1			
	[22]		COVER A-COWL TOP CTR									
	79410 05008		S	S					1			
	[23]		CAP NUT									
	79491 05000		S	S					3			
	[24]		CAP "A"-CTR COVER MTG									
	79415 05000		S	S					6			

5730

DASH PANEL & COWL

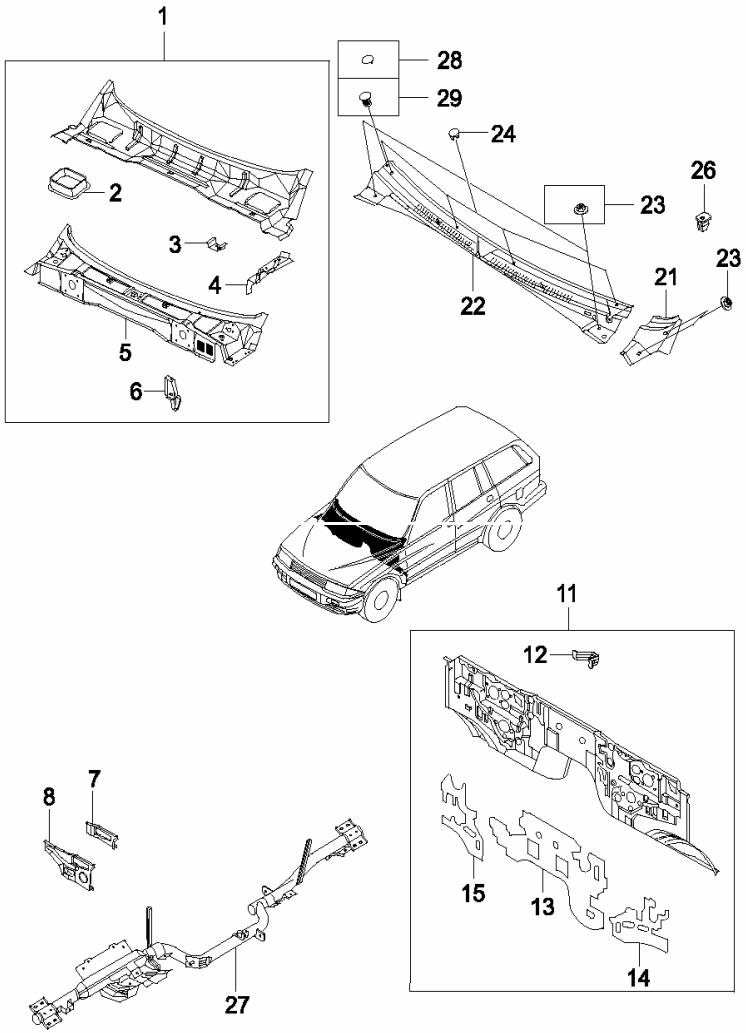

KEY NO.		PART NAME										
ITC	PART NO.	T/M	ENGINE G23D	ENGINE G32D	ENGINE	ENGINE	OPTION	L/R	Q'TY	APPLICATION FROM	APPLICATION TO	REMARK
	[26] 79417 05001		GROMMET-COWL TOP COVER MTG S	S					3			
	[27] 51501 05204		MEMBER A-COWL CROSS S	S					1			
	[28] 79419 05000		CAP "C"-CTR COVER MTG S	S					1			
	[29] 79418 05000		CAP "B"-CTR COVER MTG S	S					1			

6 BODY HANGON PARTS

6110	HOOH PANEL
6210	FRONT DOOR PANEL
6310	REAR DOOR PANEL
6410	TAIL GATE PANEL
6810	AIR CONDITIONER KIT
6820	AIR CONDITIONER HOSE & PIPE LINE
6830	AIR DISTRIBUTOR
6840	EVAPORATOR
6850	CONDENSER

6110

HOOD PANEL

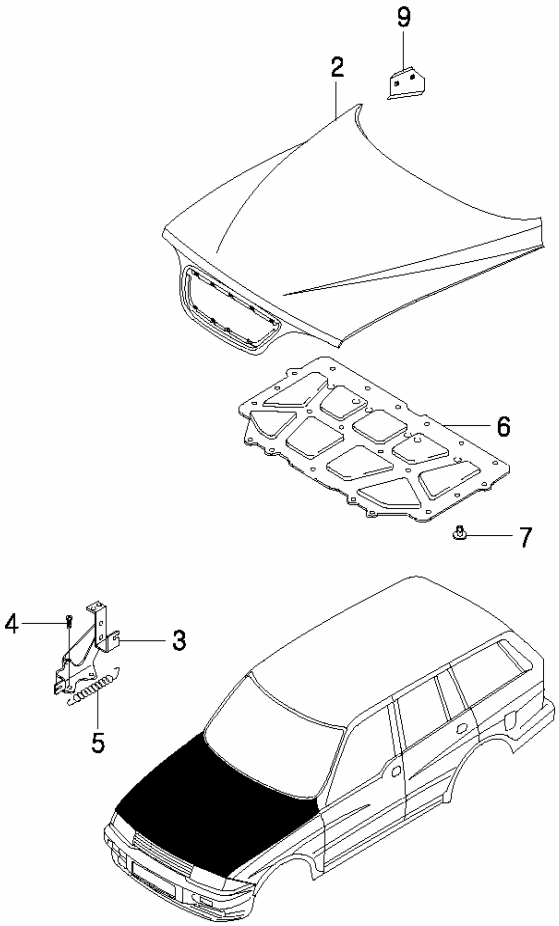

KEY NO.		PART NAME										
			ENGINE							APPLICATION		
ITC	PART NO.	T/M	G23D	G32D			OPTION	L/R	Q'TY	FROM	TO	REMARK
	[02]		PANEL A-HOOD									
	61001 05080		S	S					1			
	[03]		HINGE A-HOOD									
	61830 05001		S	S				L	1			
	61840 05001		S	S				R	1			
	[04]		BOLT-FLANGE									
	61819 05001		S	S				B	4			M6×1.0×20
	[05]		SPRING-HOOD HINGE									
	61860 05001		S	S				B	2			
	[06]		PAD-HOOD INSULATION									
	71160 05053		S	S					1			
	[07]		FASTENER-HOOD INSULATION PAD									
	71161 05001		S	S					23			
	[09]		REINF A-HOOD HINGE									
	61810 05000		S	S				L	1			
	61820 05000		S	S				R	1			

6210

FRONT DOOR PANEL

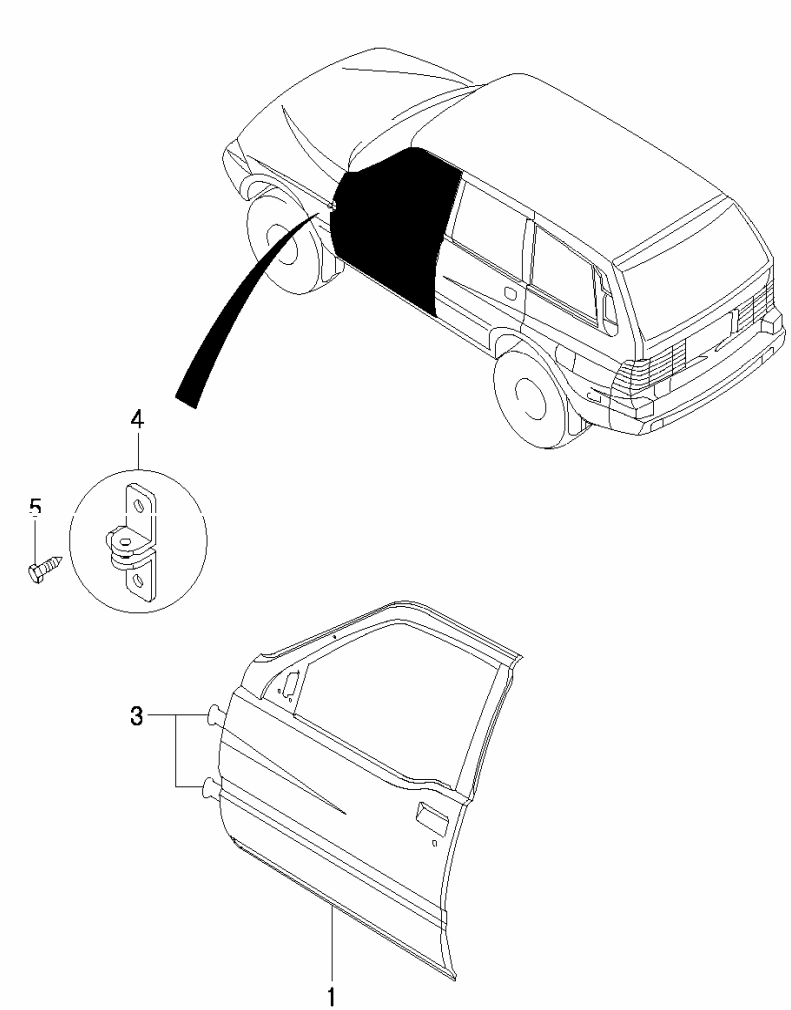

KEY NO.		PART NAME										
			ENGINE							APPLICATION		
ITC	PART NO.	T/M	G23D	G32D			OPTION	L/R	Q'TY	FROM	TO	REMARK
	[01]		PANEL A-FRONT DOOR									
	62003 05066		S	S			GARNISH-NARROW	L	1			
	62003 05084		S	S			GARNISH-WIDE	L	1			
	62004 05066		S	S			GARNISH-NARROW	R	1			
	62004 05084		S	S			GARNISH-WIDE	R	1			
	[03]		HINGE ASSY									
	62810 05001		S	S					2			FRT LWR LH,UPR RH,RR LWR LH
	62820 05001		S	S					2			FRT LWR RH,UPR LH,RR LWR RH
	[04]		BRKT A-DOOR CHECKER MTG									
	62901 05004		S	S				B	2			
	[05]		SCREW-DR CHKR MTG									
	62902 05000		S	S				B	4			M6×1.0×16

6310

REAR DOOR PANEL

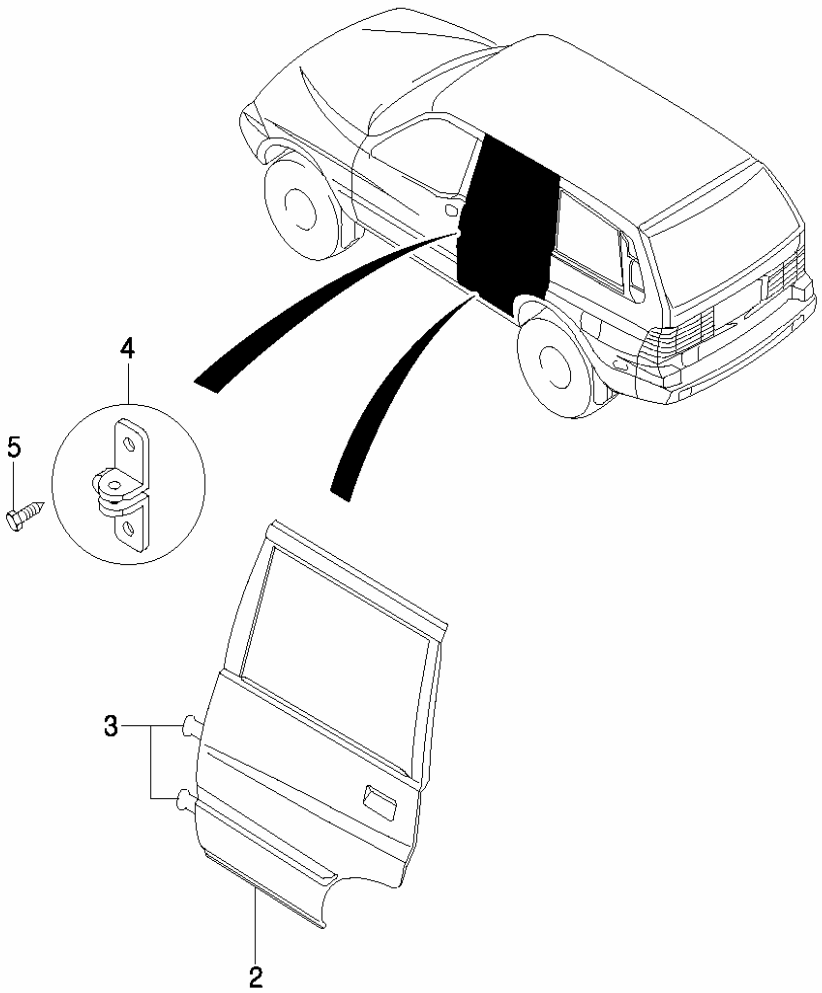

KEY NO.		PART NAME										
			ENGINE							APPLICATION		
ITC	PART NO.	T/M	G23D	G32D			OPTION	L/R	Q'TY	FROM	TO	REMARK
	[02]		PANEL A-REAR DOOR									
	63003 05065		S	S			GARNISH-NARROW	L	1			
	63003 05083		S	S			GARNISH-WIDE	L	1			
	63004 05065		S	S			GARNISH-NARROW	R	1			
	63004 05083		S	S			GARNISH-WIDE	R	1			
	[03]		HINGE ASSY									
	62810 05001		S	S				L	1			FRT LWR LH,UPR RH,RR LWR LH
	62820 05001		S	S				R	1			FRT LWR RH,UPR LH,RR LWR RH
	63810 05001		S	S				L	1			REAR UPPER LH
	63820 05001		S	S				R	1			REAR UPPER RH
	[04]		BRKT A-DOOR CHECKER MTG									
	62901 05004		S	S				B	2			
	[05]		SCREW-DR CHKR MTG									
	62902 05000		S	S				B	4			M6×1.0×16

6410

TAIL GATE PANEL

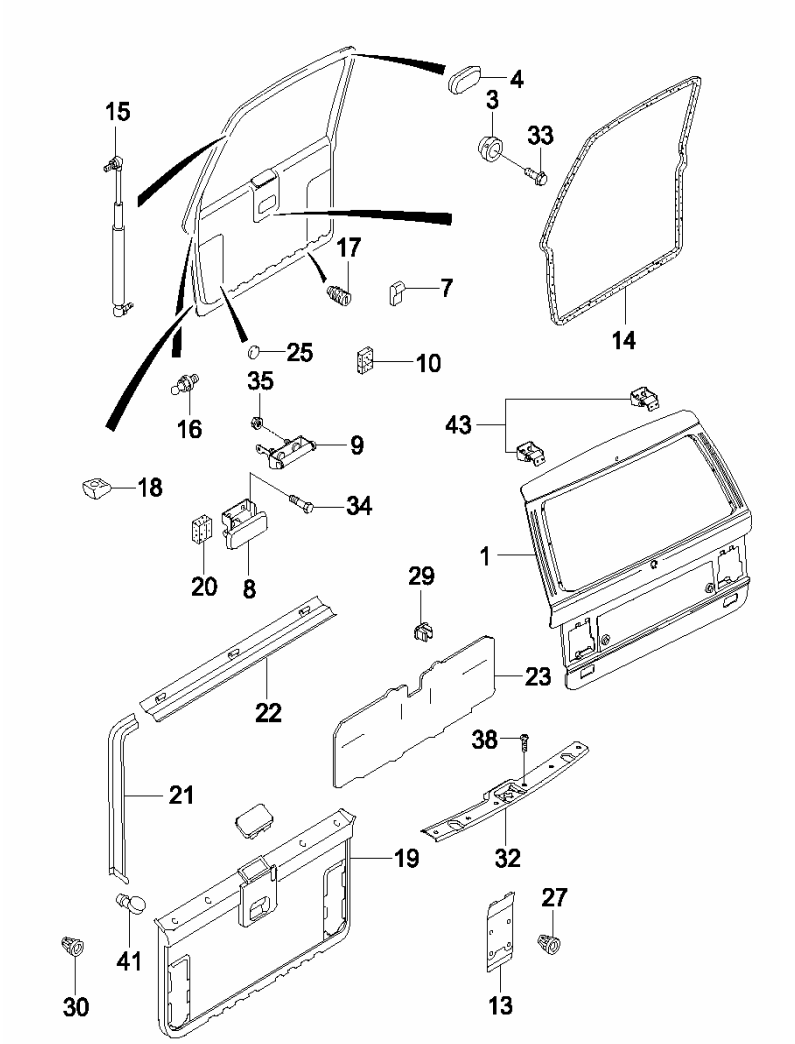

KEY NO.		PART NAME										
ITC	PART NO.	T/M	ENGINE G23D	ENGINE G32D	ENGINE	ENGINE	OPTION	L/R	Q'TY	APPLICATION FROM	APPLICATION TO	REMARK
	[01] 64040 05008		PNL A-T/GATE INR S	S					1			
	[03] 71415 05000		BPR NO.2-T/GATE GUIDE S	S					2			
	[04] 71416 05000		PLUG-BLIND SLOT S	S					4			14×40
	[07] 71452 05000		KNOB-T/GATE S/LOCK ROD S	S					1			
	[08] 71455 05000		HDL A-T/GATE I/S S	S					1			
	[09] 71460 05000		HDL A-T/GATE O/S S	S					1			
	[10] 71469 05000		PAD-T/GATE S/KNOB SEAL'G S	S					1			
	[13] 71477 05001		COVER-RR COMBI LAMP S	S				L	1			
	71478 05001		S	S				R	1			
	[14] 71479 05001		W/STRIP-T/GATE OPEN'G S	S					1			

6410

TAIL GATE PANEL

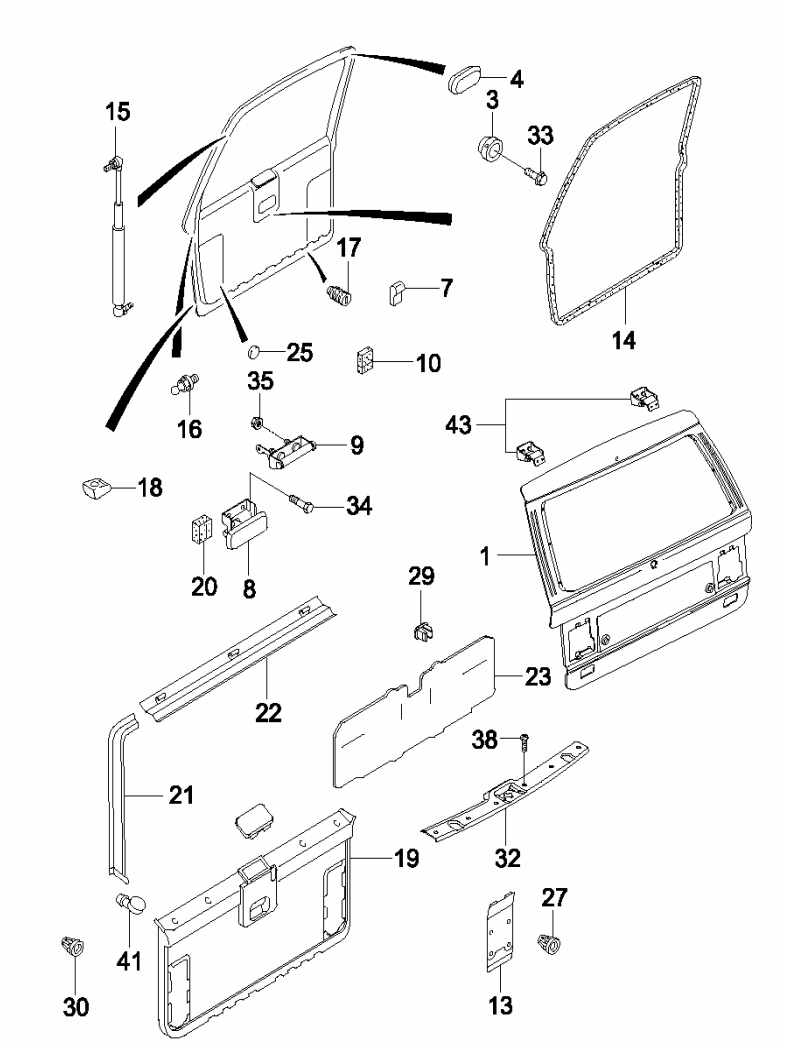

KEY NO.		PART NAME										
			ENGINE							APPLICATION		
ITC	PART NO.	T/M	G23D	G32D			OPTION	L/R	Q'TY	FROM	TO	REMARK
	[15] 71480 05030		LIFTER-T/GATE S	S				B	2			
	[16] 71409 08000		BALL STUD S	S					4			
	[17] 71484 05000		BUMPER-T/GATE O/SLAM S	S					2			
	[18] 71485 05000		BPR-T/GATE GUIDE S	S					2			
	[19] 71486 05004		PNL A-T/GATE TRIM S	S					1			
	[20] 71489 05000		PAD-T/GATE I/S HDL SEALG S	S					1			
	[21] 71491 05000		COVER A-T/GATE SIDE TRIM S	S					1			
	71492 05000		S	S					1			
	[22] 71495 05001		COVER A-T/GATE UPR TRIM S	S					1			
	[23] 71498 05002		SEAL-T/GATE TRIM S	S					1			

6410

TAIL GATE PANEL

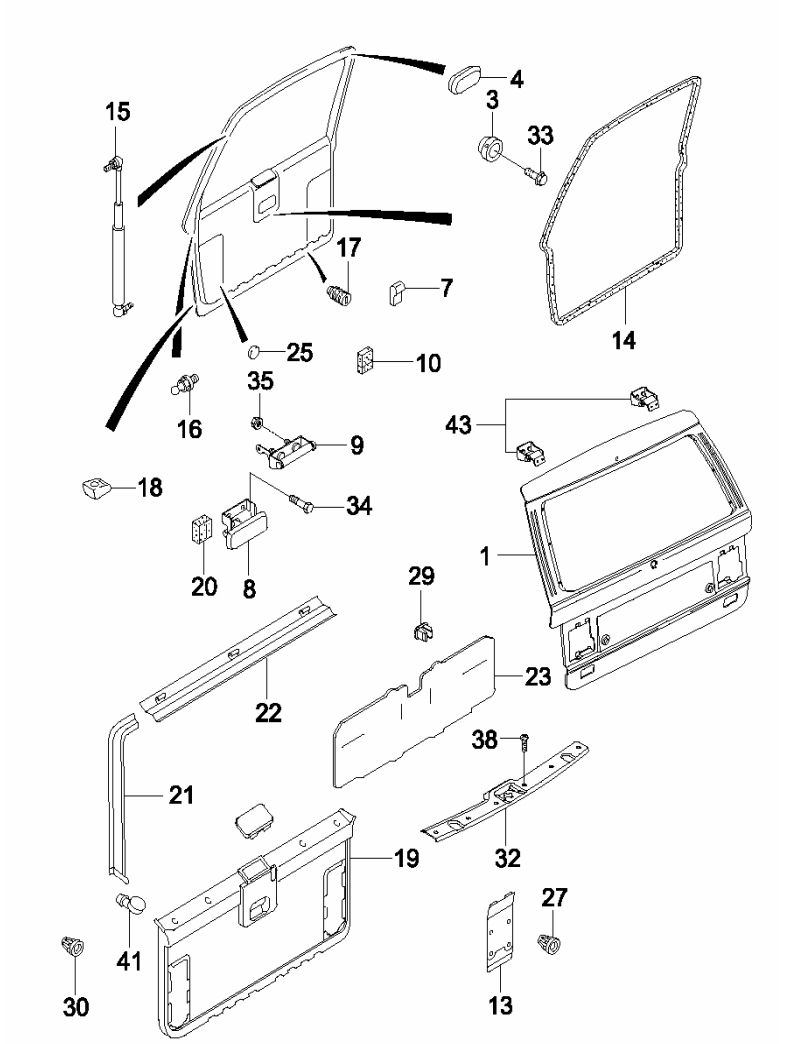

KEY NO.		PART NAME										
ITC	PART NO.	T/M	ENGINE G23D	ENGINE G32D	ENGINE	ENGINE	OPTION	L/R	Q'TY	APPLICATION FROM	APPLICATION TO	REMARK
	[25] 72191 05000		S	S			TAPE-DR TOOLING HOLE SEALING		2			
	[27] 72279 05000		S	S			GROMMET-DR TRIM MTG		1			
	[29] 76151 05000		S	S			GROMMET-SCREW		6			
	[30] 72472 05000		S	S			GROMMET-DR I/S HDL MTG		6			
	[32] 76861 05002		S	S			TRIM-RR TRANSVERSE		1			
	[33] 95907 0816D		S	S			BOLT-HEX SEMS		2			M8×1.25×16
	[34] 91627 0610D		S	S			BOLT-HEX FLG		2			M6×1.0
	[35] 92884 0600D		S	S			NUT-HEX FLG		2			M6×1.0
	[38] 93804 50162		S	S			T/SCREW-TRUSS		2			M5×16

6410

TAIL GATE PANEL

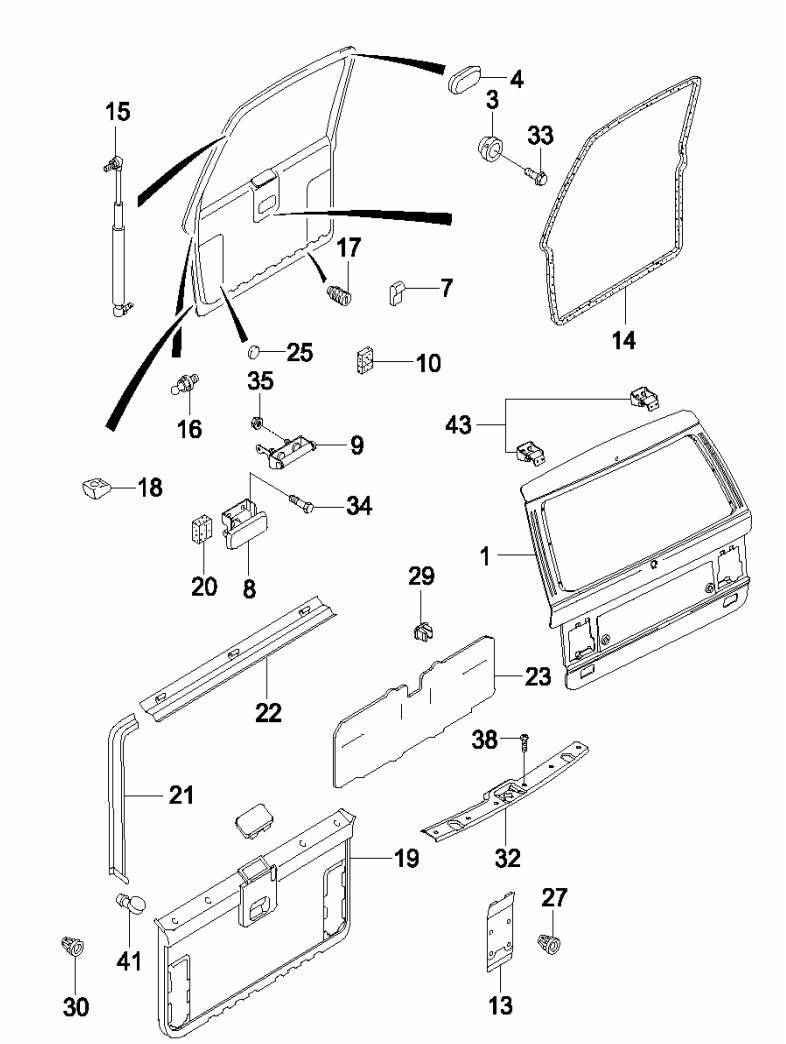

KEY NO.		PART NAME										
ITC	PART NO.	T/M	ENGINE G23D	ENGINE G32D	ENGINE	ENGINE	OPTION	L/R	Q'TY	APPLICATION FROM	APPLICATION TO	REMARK
	[41]		CAP-T/GATE TRIM PNL MTG									
	71403 05000		S	S					2			
	71404 05000		S	S					2			
	[43]		HINGE A-T/GATE									
	64810 05001		S	S					2			

6810

AIR CONDITIONER KIT

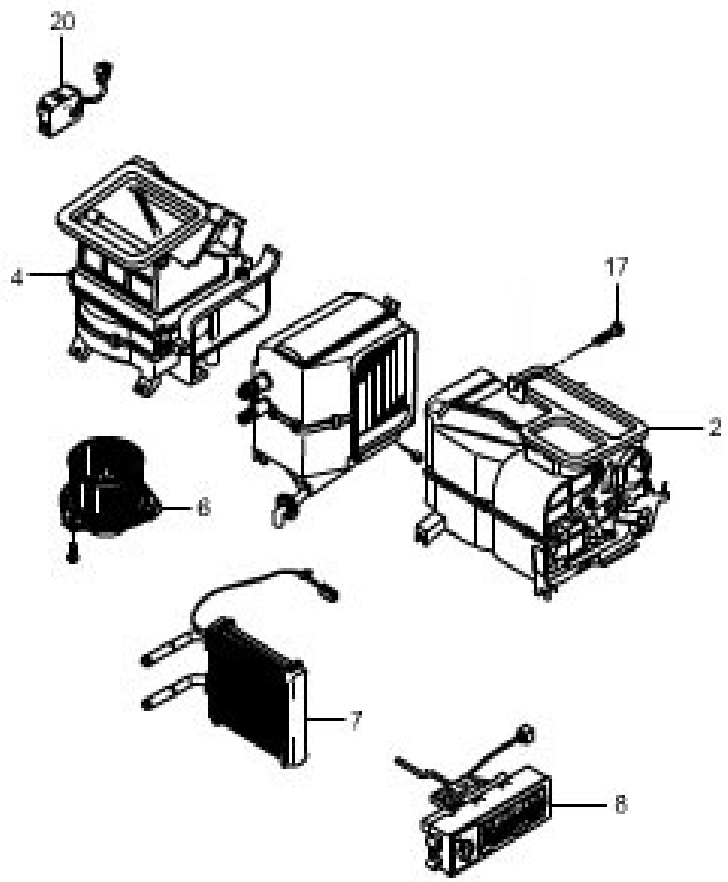

KEY NO.		PART NAME										
			ENGINE							APPLICATION		
I T C	PART NO.	T / M	G 2 3 D	G 3 2 D			OPTION	L / R	Q - T Y	FROM	TO	REMARK
	[02] 69100 05231		UNIT A-HEATER S	S			&HA3.	L	1			
	[04] 69200 06212		UNIT A-BLOWER S	S			&HA3.	L	1			
	[06] 69210 05401		FAN & MOTOR A-BLOWER S	S					1			
	[07] 69112 05031		CORE A-HEATER S	S				L	1			
	[08] 85330 05010		PNL A-A/CON (AUTO) S	S			&HA3.		1			
	[17] 98284 0620D		SCREW-HEX SEMS S	S			&HA3.		1			M6 X 1.0 X 20
	[20] 69220 05000		ACTUATOR A-INTAKE S	S					1			

6820

AIR CONDITIONER HOSE & PIPE LINE

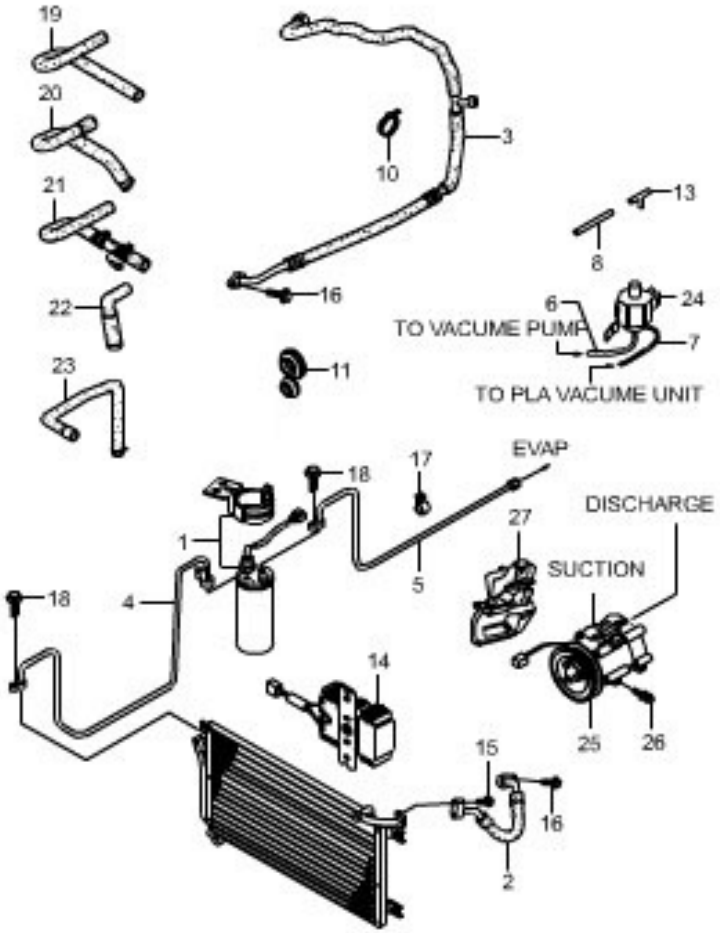

KEY NO.		PART NAME										
			ENGINE							APPLICATION		
ITC	PART NO.	T/M	G23D	G32D			OPTION	L/R	Q'TY	FROM	TO	REMARK
	[02] 661 130 31 15		COMPRESSOR A-AIR CON S	S			&HA3.		1			
	[03] 914011 008013		BOLT-COMBI S	S			&HA3.		4			M8 X 105
	[06] 68510 05250		RECEIVER & BRKT A S	S			&HA3.		1			
	[09] 68620 05510		HOSE-SUCTION S				&HA3.		1			
	68620 05520			S			&HA3.		1			
	[10] 68630 05250		PIPE-LIQUID "A" S	S			&HA3.		1			
	[11] 68640 05250		PIPE-LIQUID "B" S	S			&HA3.		1			
	[17] 82952 05030		BAND S	S			&HA3.		1			
	[18] 68320 05001		GROMMET-A/CON S	S			&HA3.		1			
	[21] 68430 05030		RESISTOR-CONDENSER FAN S	S			&HA3.		1			

6820

AIR CONDITIONER HOSE & PIPE LINE

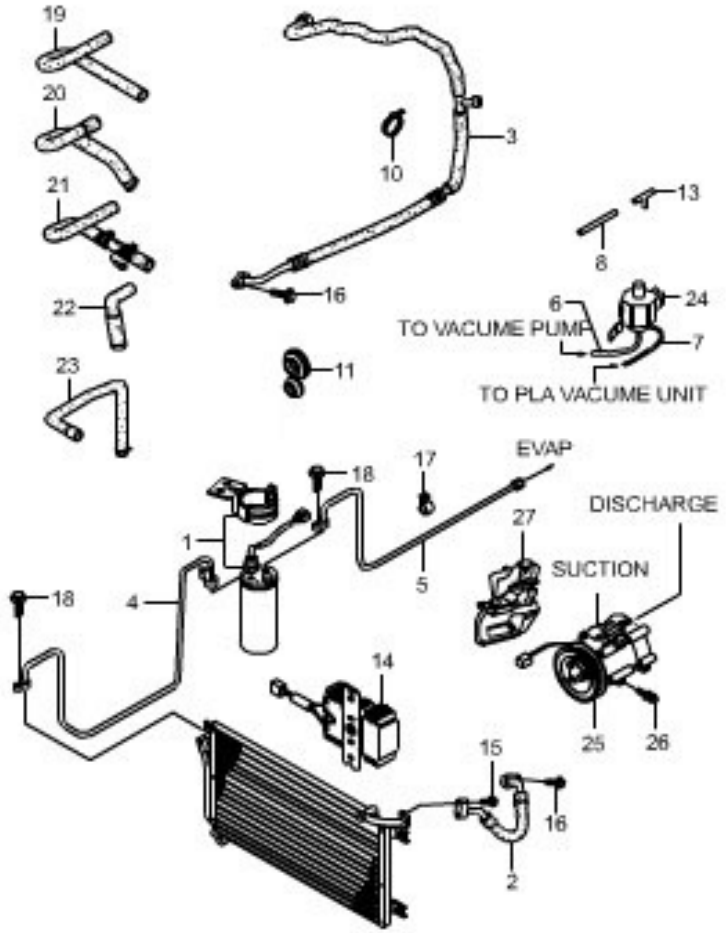

KEY NO.		PART NAME										
			ENGINE							APPLICATION		
ITC	PART NO.	T/M	G23D	G32D			OPTION	L/R	Q'TY	FROM	TO	REMARK
	[24] 91607 0825D		BOLT-HEX FLG S	S			&HA3.		1			M8 X 1.25
	[26] 94407 08001		CLIP-CLOSED-CT S	S			&HA3.		1			M8
	[27] 98274 0625D		SCREW-HEX SEMS S	S			&HA3.		1			M6 X 1.0 X 25
	[28] 69411 05020		HOSE A-HEATER INLET S						1			
	[28] 69411 05040		HOSE A-HEATER INLET	S					1			
	[30] 69420 05020		HOSE A-HEATER OUTLET	S					1			
	[31] 69431 05000		GROMMET-HEATER PIPE	S					2			

6830

AIR DISTRIBUTOR

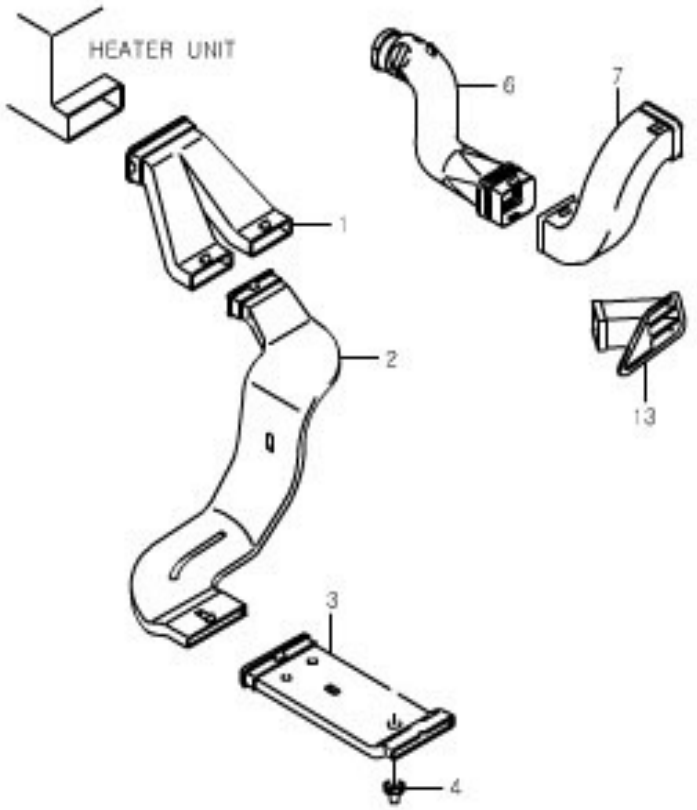

KEY NO.		PART NAME										
			ENGINE							APPLICATION		
I T C	PART NO.	T / M	G 2 3 D	G 3 2 D			OPTION	L / R	Q ' T Y	FROM	TO	REMARK
	[01] 69321 05050		S	S			DUCT-RR HEATING JOINT		1			
	[02] 69322 05053		S	S			DUCT A-RR HEATING	L	1			
	[02] 69323 05053		S	S			DUCT A-RR HEATING	R	1			
	[03] 69324 05051		S	S			DUCT A-RR HEATING,RR		2			
	[04] 82512 05000		S	S			GROMMET-SCREW		4			
	[06] 69341 05000		S	S			HOSE-SIDE AIR VENT #1	L	1			

6840

EVAPORATOR

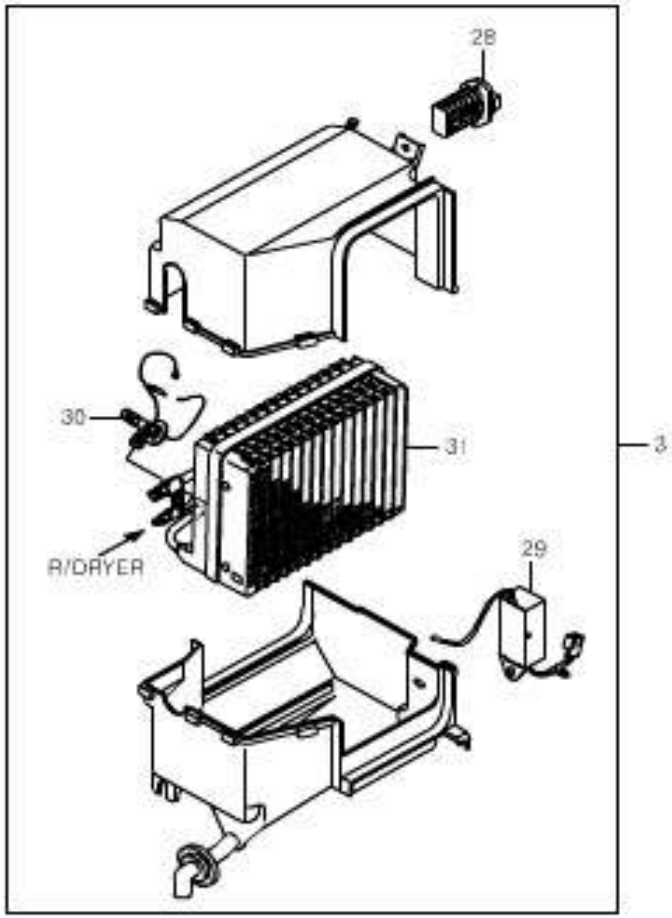

KEY NO.		PART NAME										
			ENGINE							APPLICATION		
I T C	PART NO.	T / M	G 2 3 D	G 3 2 D			OPTION	L / R	Q - T Y	FROM	TO	REMARK
	[03] 68310 05032		EVAPORATOR A S	S			&HA3.	L	1			
	[28] 68313 05001		RESISTOR A S	S					1			
	[29] 68314 05030		AMP A-THERMO S	S			&HA3.		1			
	[30] 68311 05001		VALVE A-EXPANSION S	S			&HA3.	L	1			
	[31] 68312 05000		CORE A-EVAPORATOR S	S			&HA3.	L	1			

6850

CONDENSER

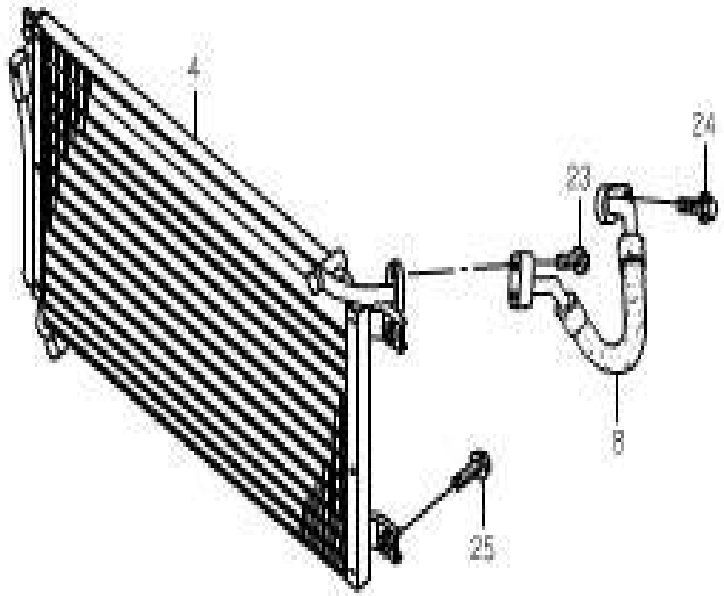

KEY NO.		PART NAME										
			ENGINE							APPLICATION		
ITC	PART NO.	T/M	G23D	G32D			OPTION	L/R	Q'TY	FROM	TO	REMARK
	[04]		CONDENSER A									
	68410 05030		S	S			&HA3.		1			
	[08]		HOSE-DISCHARGE									
	68610 05221		S				&HA3.		1			
	68610 05241			S			&HA3.		1			
	[23]		BOLT-HEX SEMS									
	95804 0830D		S	S			&HA3.		1			M8 X 1.25 X 30
	[24]		BOLT-HEX FLG									
	91607 0825D		S	S			&HA3.		1			M8 X 1.25
	[25]		SCREW-HEX SEMS									
	98294 0630D		S	S			&HA3.		4			M6 X 1.0 X 30

7 INTERRIOR & EXTERIOR

7010	KEY SET
7090	FUEL FILLER DOOR LOCK
7110	FRONT DOOR OPENING SYSTEM
7115	FRONT DOOR TRIM
7120	FRONT WINDOW LIFTER
7121	FRONT WEATHER STRIP
7210	REAR DOOR OPENING SYSTEM
7215	FRONT DOOR TRIM
7220	REAR WINDOW LIFTER
7221	REAR WEATHER STRIP
7310	TAIL GATE LOCK
7330	HEADLINING
7410	FRONT SEAT
7420	FRONT SEAT PARTS
7430	FRONT SEAT BELT
7440	SEAT GUIDE RAIL
7510	REAR SEAT
7520	REAR SEAT PARTS
7530	REAR SEAT BELT
7610	INSTRUMENT PANEL
7630	CONSOLE
7720	FRONT FLOOR CARPET
7730	PILLAR TRIM
7740	LUGGAGE TRIM
7770	SUNSHADE & INSIDE MIRROR
7810	WINDSHIELD WIPER
7820	WINDSHIELD WASHER
7830	REAR WINDOW WIPER
7840	GLASS
7850	OUTSIDE MIRROR
7870	FRONT BUMPER
7880	REAR BUMPER
7910	RADIATOR GRILLE
7920	MUD GUARD

7930	**SIDE BODY MOULDING**
7940	**REAR BODY MOULDING**
7950	**EMBLEM & LETTERING**

7010

KEY SET

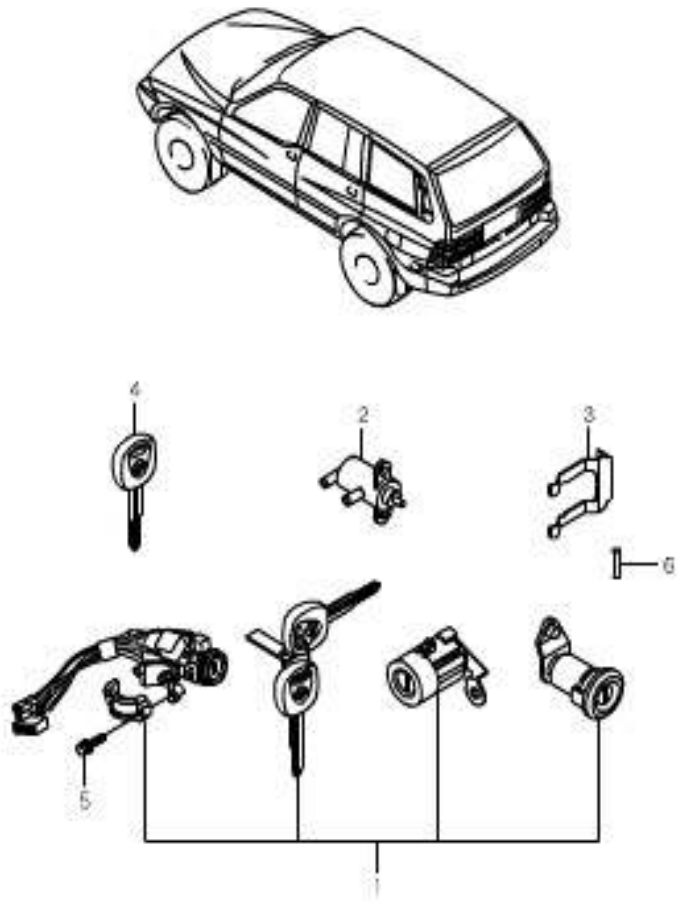

KEY NO.		PART NAME										
			ENGINE							APPLICATION		
ITC	PART NO.	T/M	G23D	G32D			OPTION	L/R	Q'TY	FROM	TO	REMARK
	[01]		KEY SET									
	R101T-1004		S	S			&GG2/GG3-ACM.		1			
	R101T-1005		S	S			&GG2/GG3&ACM.		1			
	[03]		RETAINER-DR LOCK									
	73671 03001		S	S					1			
	[04]		KEY & RING A									
	R101T-1105		S	S			&ACM.		1			
	R101T-1100		S	S			-ACM.		1			
			KEY-IGNITION									
	R101T-1106		S	S			&ACM.		1			
	R101T-1101		S	S			-ACM.		1			
	[05]		BOLT-CLAMP MTG									
	71043 05000		S	S					2			
	[06]		TRANSPONDER-IMMOBILIZER									
	86960 11000		S	S			&ACM.		1			

7090

FUEL FILLER DOOR LOCK

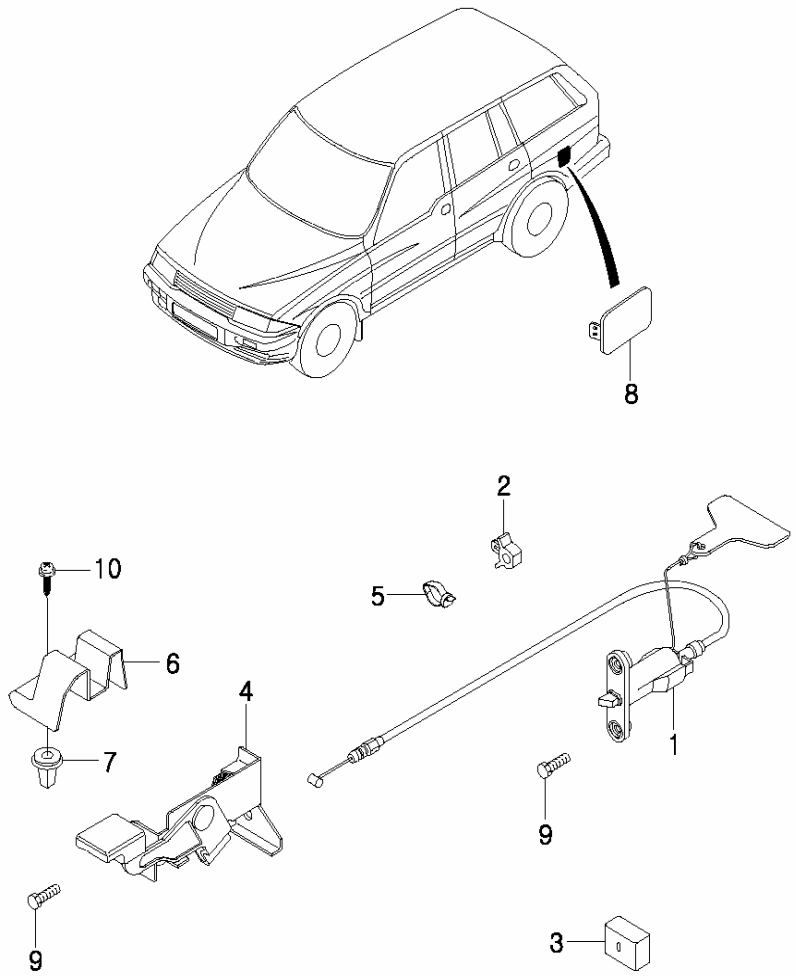

KEY NO.		PART NAME										
ITC	PART NO.	T/M	ENGINE G23D	ENGINE G32D	ENGINE	ENGINE	OPTION	L/R	Q'TY	APPLICATION FROM	APPLICATION TO	REMARK
	[01] 71610 05001		S	S			CATCH&CABLE A-FUEL FILLER DR	L	1			
	[02] 71628 05000		S	S			CLIP-FUEL FILLER DR RELEASE CABLE		1			
	[03] 71629 05000		S	S			BUMPER-FUEL FILLER DR OVERSLAM		1			
	[04] 71640 05001		S	S			HANDLE A-FUEL FILLER DR RELEASE	L	1			
	[05] 82952 05010		S	S			BAND		2			
	[06] 71660 05000		S	S			COVER-FUEL FILLER DR RELEASE HANDLE		1			
	[07] 82512 05000		S	S			GROMMET-SCREW		2			
	[08] 63610 05001		S	S			PNL&HINGE A-FUEL FILLER DR		1			
	[09] 98274 0620D		S	S			SCREW-HEX SEMS		1			M6X1.0X20
	[10] 93704 6020D		S	S			TOP'G SCREW-PAN		2			M6X20

7110

FRONT DOOR OPENING SYSTEM

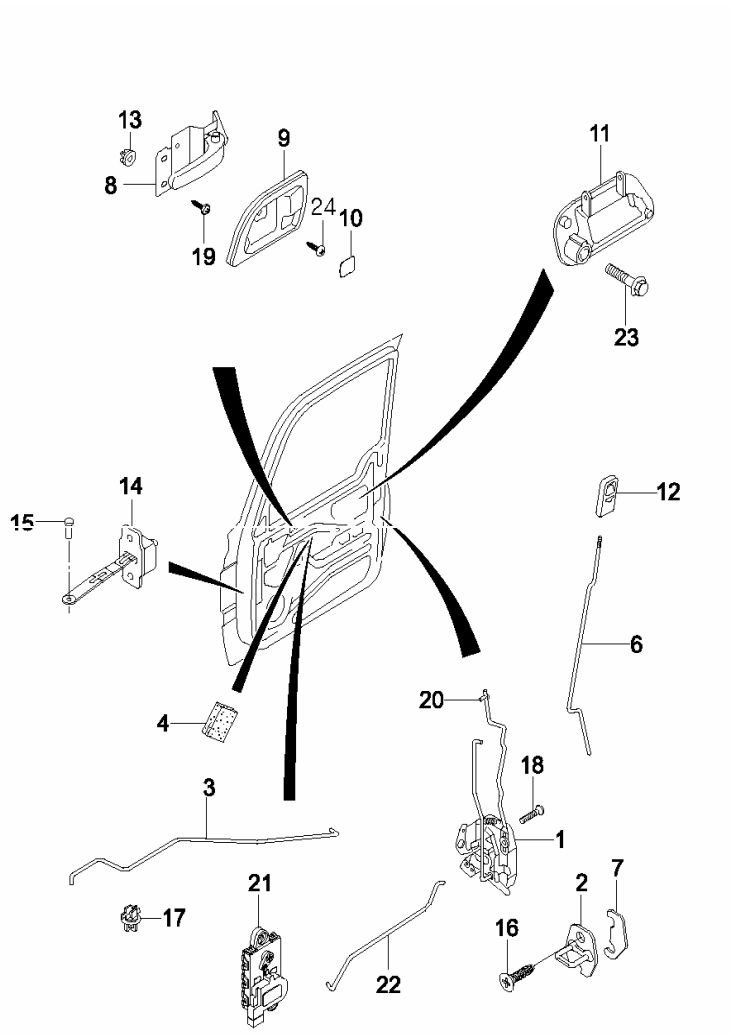

KEY NO.		PART NAME										
			ENGINE							APPLICATION		
ITC	PART NO.	T/M	G23D	G32D			OPTION	L/R	Q'TY	FROM	TO	REMARK
	[01]		LATCH & ROD A-FRT DR									
	71201 05004		S	S				L	1			
	71202 05004		S	S				R	1			
	[02]		STRIKER A-DR									
	71250 05000		S	S				B	2			
	[03]		ROD-FRT DR INSIDE HANDLE									
	71271 05010		S	S				L	1			
	71272 05010		S	S				R	1			
	[04]		PAD-DR INSIDE HANDLE ROD									
	71278 05000		S	S				B	2			
	[06]		ROD-FRT DR SAFETY LOCK									
	71295 05002		S	S				L	1			
	71296 05002		S	S				R	1			
	[07]		SHIM-DR STRIKER									
	72296 03000		S	S					A			
	[08]		HANDLE A-DR INSIDE									
	72410 05010		S	S				L	1			
	72420 05010		S	S				R	1			
	[09]		BEZEL A-DR INSIDE									
	72430 05010		S	S				L	1			
	72440 05010		S	S				R	1			

7110

FRONT DOOR OPENING SYSTEM

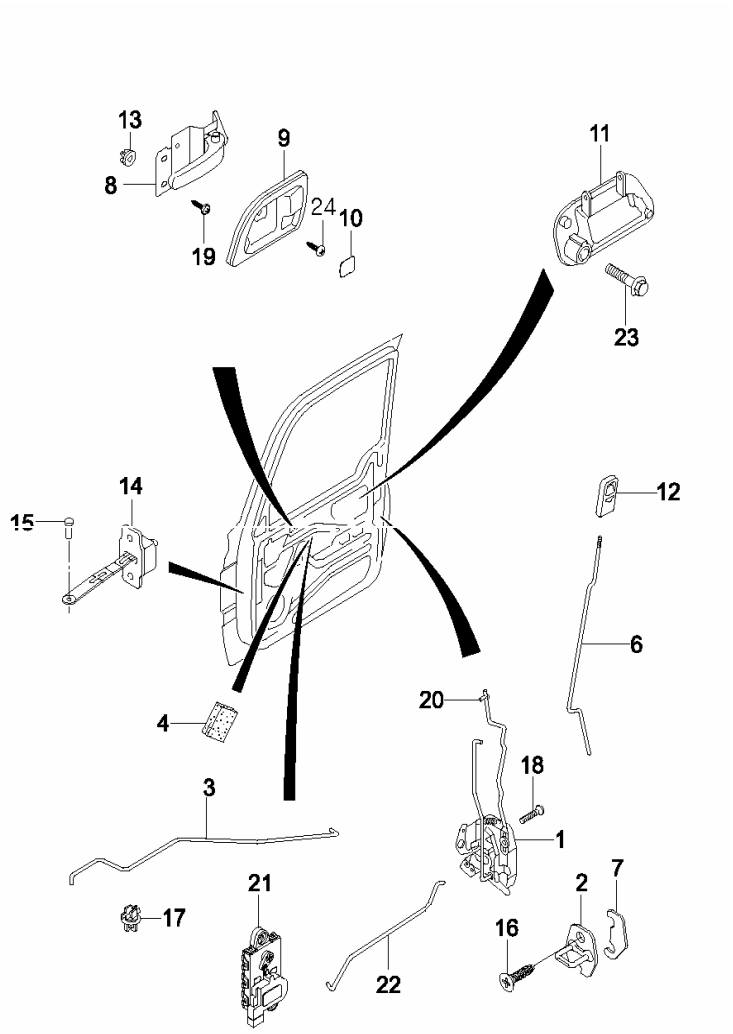

KEY NO.		PART NAME										
			ENGINE							APPLICATION		
ITC	PART NO.	T/M	G23D	G32D			OPTION	L/R	Q'TY	FROM	TO	REMARK
	[10]		CAP-DR INSIDE HANDLE BEZEL MTG									
	72424 05010		S	S				L	1			
	72434 05010		S	S				R	1			
	[11]		HANDLE A-FRT DR OUTSIDE									
	72450 05010		S	S				L	1			
	72460 05010		S	S				R	1			
	[12]		KNOB-DR SAFETY LOCK									
	72470 05000		S	S				B	2			
	[13]		GROMMET-DR INSIDE HANDLE MTG									
	72472 05000		S	S				B	6			
	[14]		CHECKER A-FRT DR									
	72880 05010		S	S				B	2			
	[15]		PIN-DR CHECKER MTG									
	71297 05002		S	S				B	2			
	[16]		SCREW-COUNTER SUNK									
	93685 80301		S	S				B	4			M8X1.25
	[17]		HOLDER(8)									
	99003 08100		S	S				B	2			
	[18]		SCREW-LATCH MTG									
	71209 05001		S	S				B	6			

7110

FRONT DOOR OPENING SYSTEM

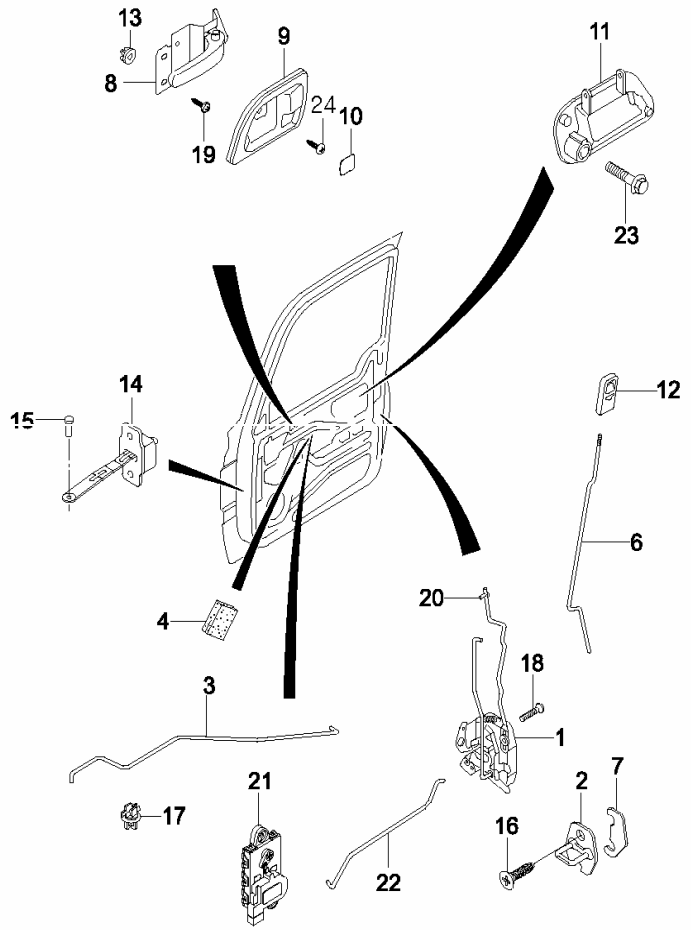

KEY NO. ITC	PART NO.	T/M	ENGINE G23D	ENGINE G32D	ENGINE	ENGINE	OPTION	L/R	Q'TY	APPLICATION FROM	APPLICATION TO	REMARK
	[19]		TAP'G SCREW-TRUSS									
	93804 6016D		S	S				B	6			M6X16
	[20]		PIN-DR OUTSIDE HANDLE ROD									
	71387 05000		S	S				B	2			
	[21]		ROD ACTUATOR A-DR LOCK,FRT									
	88350 05051		S	S				L	1			
	88350 05061		S	S				R	1			
	[22]		ROD-FRT DR									
	71287 05031		S	S				L	1			
	71288 05041		S	S				R	1			
	[23]		BOLT-HEX FLANGE									
	91627 06081		S	S				B	4			M6X1.0
	[24]		TAP'G SCREW-TRUSS									
	93804 5012B		S	S				B	2			M5X12

7115

FRONT DOOR TRIM

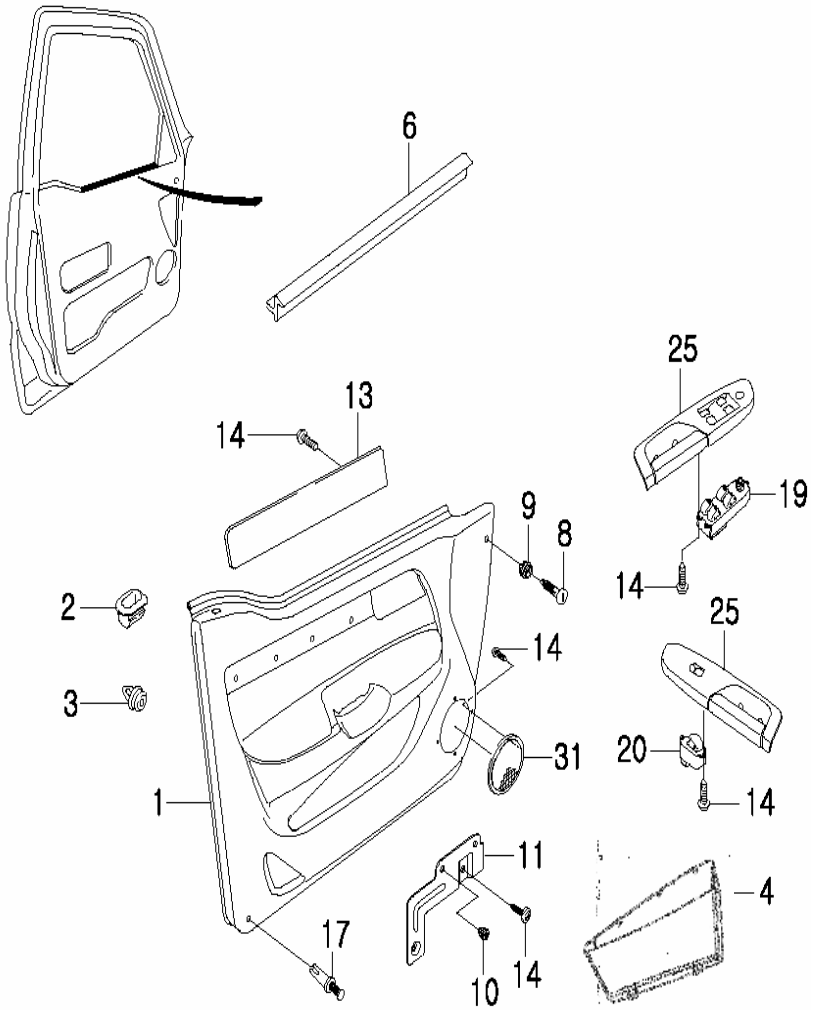

KEY NO.		PART NAME										
			ENGINE							APPLICATION		
ITC	PART NO.	T/M	G23D	G32D			OPTION	L/R	Q'TY	FROM	TO	REMARK
	[01]		PNL A-FRT DR TRIM COMPL									
	72201 05503		S	S			CLOTH TYPE	L	1			
	72201 05553		S	S			LEATHER TYPE	L	1			
	72202 05503		S	S			CLOTH TYPE	R	1			
	72202 05553		S	S			LEATHER TYPE	R	1			
			FRT DR TRIM									
	72201 05900		S	S			CLOTH TYPE	L	1			
	72201 05950		S	S			LEATHER TYPE	L	1			
	72202 05900		S	S			CLOTH TYPE	R	1			
	72202 05950		S	S			LEATHER TYPE	R	1			
	[02]		GROMMET-FRT DR SAFETY LOCK ROD									
	71273 05001		S	S				B	2			
	[03]		FASTENER-DR TRIM MTG									
	72215 05020		S	S				B	10			
	[04]		MAP POCKET-FRT DR TRIM									
	72270 05500		S	S				L	1			
	72280 05500		S	S				R	1			
	[06]		WEATHER STRIP-FRT DR BELT INSIDE									
	72551 05500		S	S				L	1			
	72561 05500		S	S				R	1			
	[08]		FASTENER-DR TRIM A									
	72278 05001		S	S				B	2			

7115

FRONT DOOR TRIM

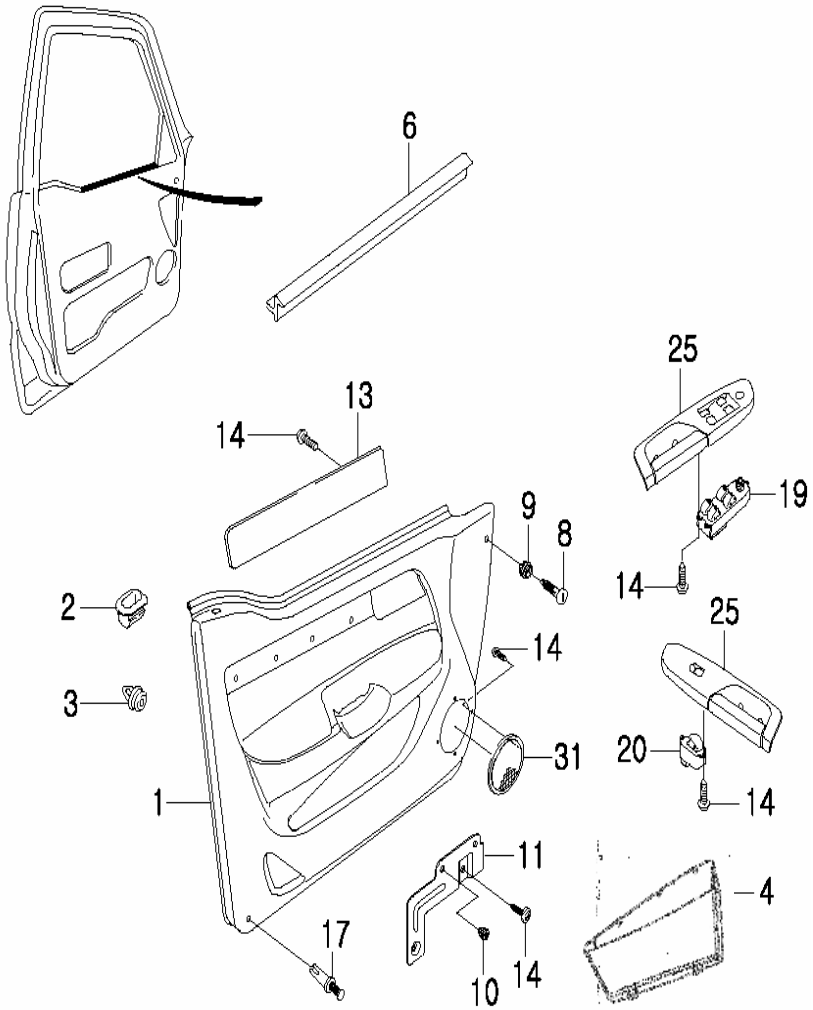

KEY NO.		PART NAME										
			ENGINE							APPLICATION		
ITC	PART NO.	T/M	G23D	G32D			OPTION	L/R	Q'TY	FROM	TO	REMARK
	[09]		GROMMET-DR TRIM MTG									
	72279 05000		S	S				B	2			
	[10]		GROMMET-DR INSIDE HANDLE MTG									
	72472 05000		S	S				B	4			
	[11]		BRKT A-FRT DR TRIM									
	72610 05501		S	S				L	1			
	72620 05501		S	S				R	1			
	[13]		MOULDING-DR TRIM(-W/G)									
	72236 05500		S	S				L	1			
	72246 05500		S	S				R	1			
	[14]		TAP'G SCREW-PAN									
	93704 4012D		S	S				L	3			M4X12
	93704 4012D		S	S				R	2			M4X12
	[17]		SCRIVET-DR TRIM MTG									
	72290 05000		S	S				B	6			
	[19]		SWITCH A-POWER WINDOW,MAIN									
	85820 05700		S	S				L	1			
	[20]		SWITCH A-POWER WINDOW,SUB									
	85830 05700		S	S				R	1			

7115

FRONT DOOR TRIM

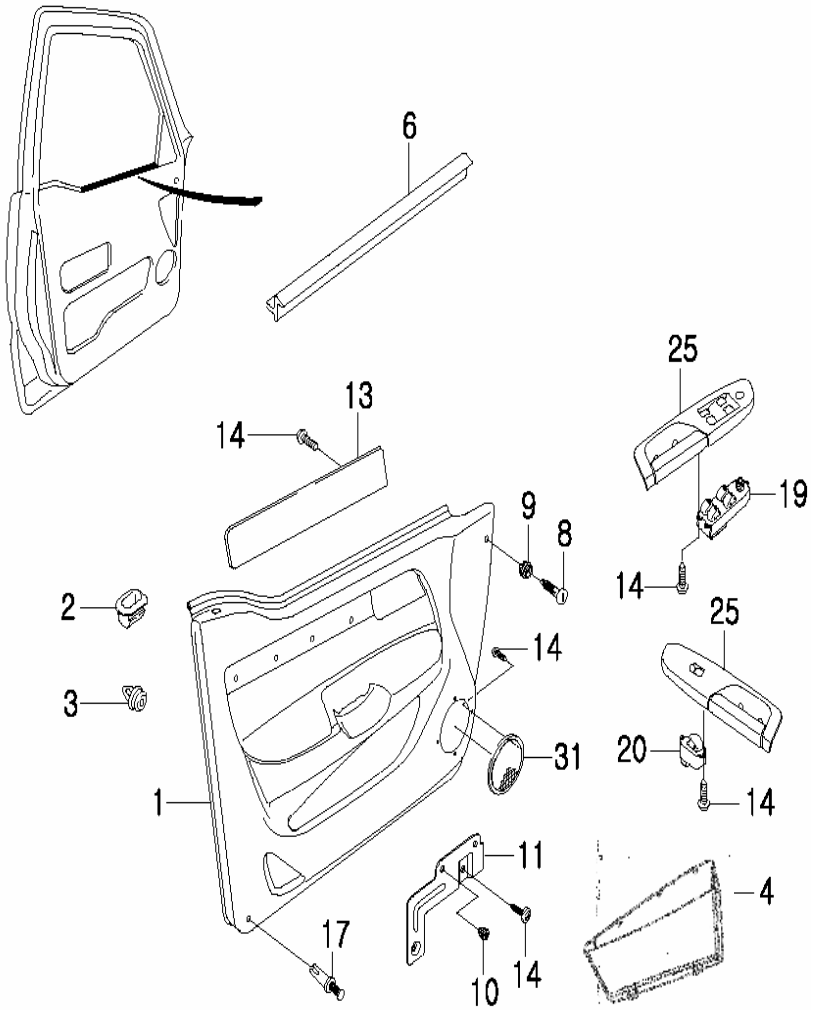

KEY NO.		PART NAME										
			ENGINE							APPLICATION		
ITC	PART NO.	T/M	G23D	G32D			OPTION	L/R	Q'TY	FROM	TO	REMARK
	[25]		GRIP HANDLE-FRT DR TRIM									
	72651 05500		S	S				L	1			
	72661 05500		S	S				R	1			
	[31]		SPEAKER GRILLE-FRT DR									
	72680 05500		S	S				L	1			
	72690 05500		S	S				R	1			

7120

FRONT WINDOW LIFTER

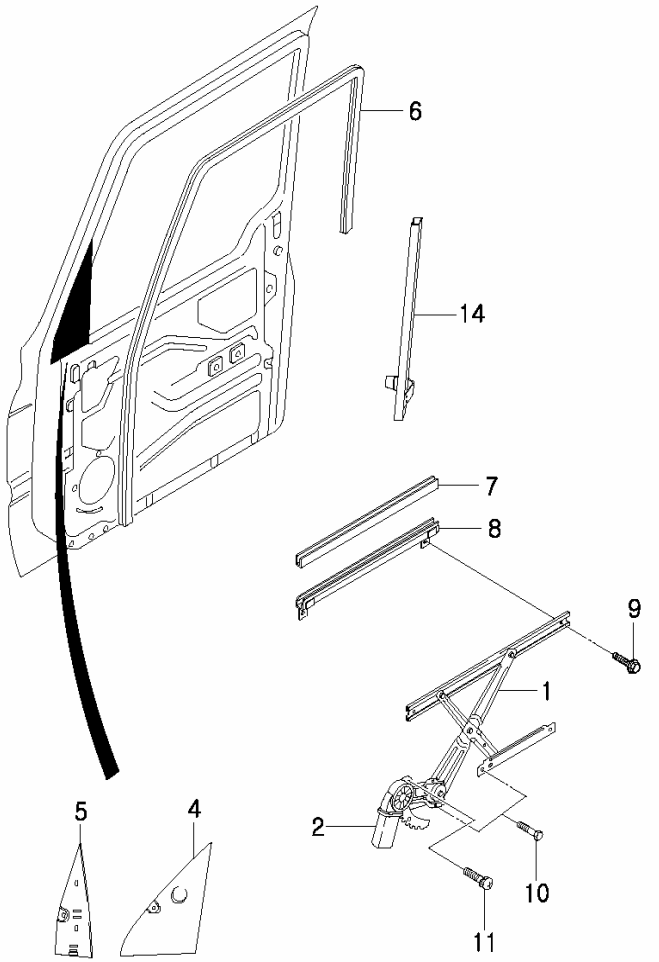

KEY NO.		PART NAME										
			ENGINE							APPLICATION		
ITC	PART NO.	T/M	G23D	G32D			OPTION	L/R	Q'TY	FROM	TO	REMARK
	[01]		REGULATOR-FRT DR POWER WINDOW									
	72330 05103		S	S				L	1			
	72340 05103		S	S				R	1			
	[02]		MOTOR A-POWER WINDOW									
	88100 05002		S	S				L	1			
	88100 05102		S	S				R	1			
	[04]		COVER A-INR									
	78960 05001		S	S			SPEAKER-6EA	L	1			
	78970 05001		S	S			SPEAKER-6EA	R	1			
	[05]		COVER A-INR									
	78930 05013		S	S			SPEAKER-2EA &SPEAKER-4EA	L	1			
	78940 05013		S	S			SPEAKER-2EA &SPEAKER-4EA	R	1			
	[06]		GLASS RUN-FRT DR WINDOW									
	72831 05011		S	S				L	1			
	72841 05011		S	S				R	1			
	[07]		SEAL STRIP-FRT DR GLASS GRIP									
	72314 05000		S	S				B	2			
	[08]		GRIP A-FRT DR GLASS									
	72312 05002		S	S				B	2			

7120

FRONT WINDOW LIFTER

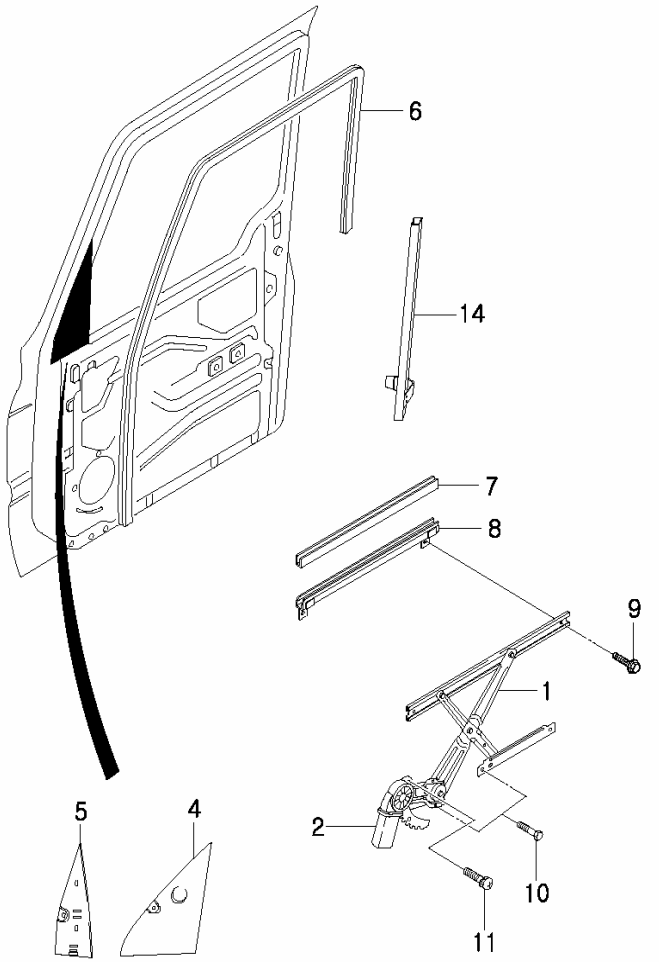

KEY NO.		PART NAME										
			ENGINE							APPLICATION		
ITC	PART NO.	T/M	G23D	G32D			OPTION	L/R	Q'TY	FROM	TO	REMARK
	[09]		SCREW-HEX SEMS									
	98207 06121		S	S				B	4			M6X1.0X12
	[10]		BOLT-HEX FLANGE									
	91627 0610D		S	S				B	8			M6X1.0
	[11]		SCREW-PAN SEM'S									
	98054 0610D		S	S				B	6			
	[14]		CHANNEL A-FRT DR QUADRANT									
	62330 05002		S	S				L	1			
	62340 05002		S	S				R	1			

7121

FRONT WEATHER STRIP

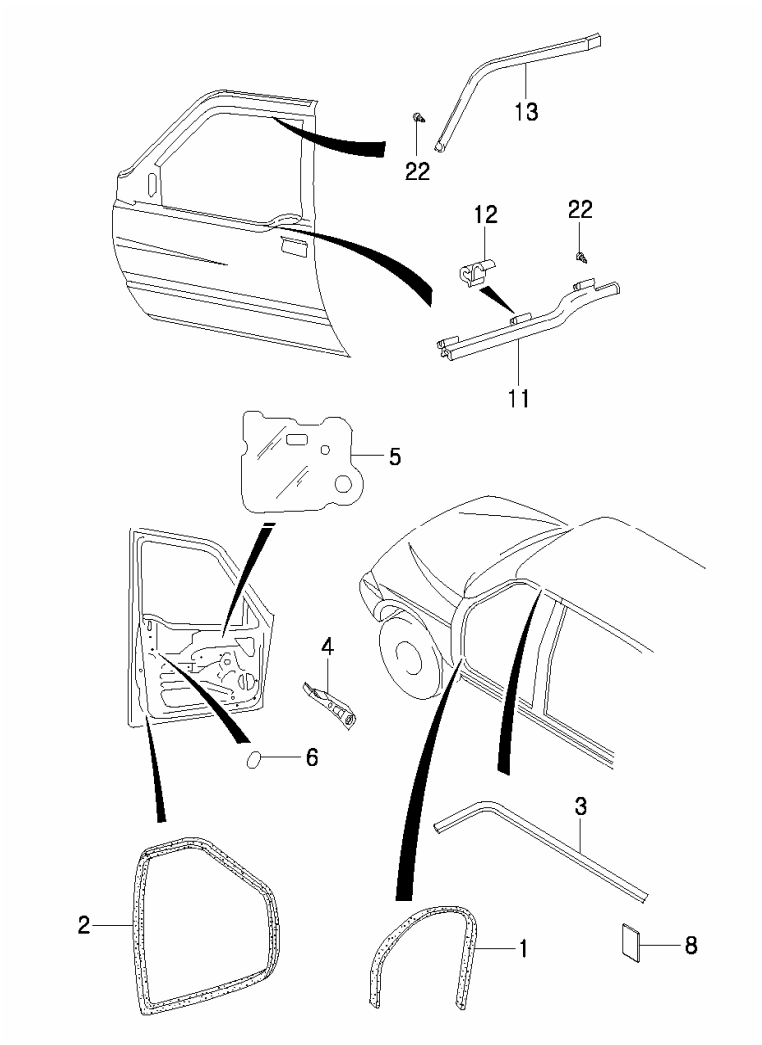

KEY NO.		PART NAME										
			ENGINE							APPLICATION		
I T C	PART NO.	T / M	G 2 3 D	G 3 2 D			OPTION	L / R	Q ' T Y	FROM	TO	REMARK
	[01]		WEATHER STRIP-FRT DR BODY SIDE									
	72110 05004		S	S				L	1			
	72120 05004		S	S				R	1			
	[02]		WEATHER STRIP A-FRT DR DR SIDE OPENG									
	72130 05003		S	S				L	1			
	72140 05003		S	S				R	1			
	[03]		WEATHER STRIP-DR DRIP									
	72150 05000		S	S				L	1			
	72160 05000		S	S				R	1			
	[04]		DAM A-FRT DR QUADRANT									
	72154 05000		S	S				L	1			
	72164 05000		S	S				R	1			
	[05]		SEAL-FRT DR TRIM									
	72291 05103		S	S				B	2			
	[06]		TAPE-DR TOOLING HOLE SEALING									
	72191 05000		S	S				L	2			
	72191 05000		S	S				R	3			
	[08]		TAPE-DR TRIM SEAL									
	72292 05000		S	S				B	4			
	[11]		WEATHER STRIP A-FRT DR BELT OUTSIDE									
	72510 05003		S	S				L	1			
	72520 05003		S	S				R	1			

7121

FRONT WEATHER STRIP

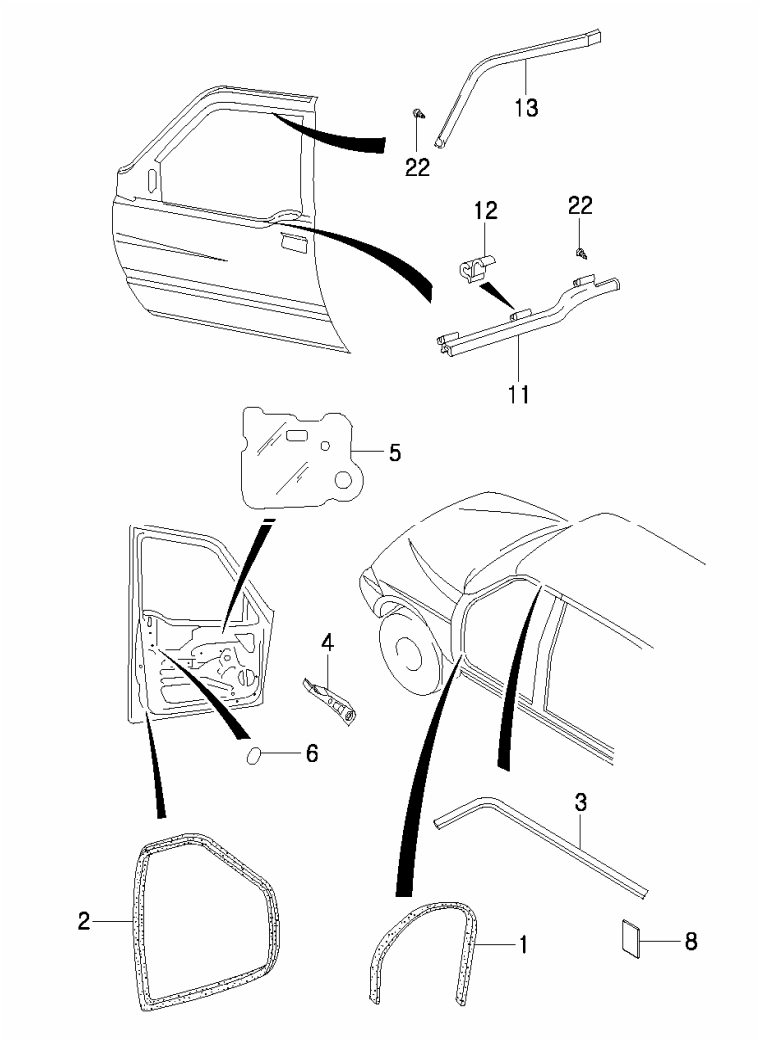

KEY NO.		PART NAME										
			ENGINE							APPLICATION		
I T C	PART NO.	T / M	G 2 3 D	G 3 2 D			OPTION	L / R	Q ' T Y	FROM	TO	REMARK
	[12]		CLIP-DR BELT OUTSIDE WEATHER STRIP MTG									
	72512 05001		S	S				B	8			
	72512 05010		S	S				B	2			
	[13]		MOULDING A-FRT DR FRAME									
	72530 05011		S	S				L	1			
	72540 05011		S	S				R	1			
	[22]		TAP'G SCREW-TRUSS									
	93814 4008B		S	S				B	2			M4X8

7210

REAR DOOR OPENING SYSTEM

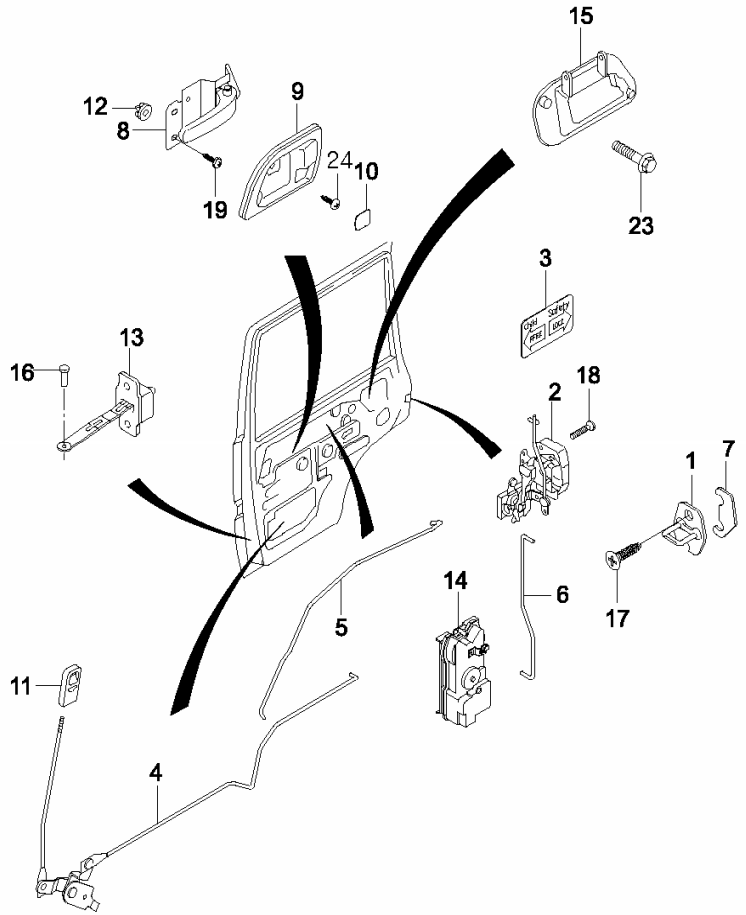

KEY NO.		PART NAME										
ITC	PART NO.	T/M	ENGINE G23D	ENGINE G32D	ENGINE	ENGINE	OPTION	L/R	Q'TY	APPLICATION FROM	APPLICATION TO	REMARK
	[01]		STRIKER A-DR									
	71250 05000		S	S				B	2			
	[02]		LATCH & ROD A-RR DR									
	71301 05002		S	S				L	1			
	71302 05002		S	S				R	1			
	[03]		LABEL-DR CHILD SAFETY									
	71352 05000		S	S				L	1			
	71362 05001		S	S				R	1			
	[04]		ROD & BELL CRANK A-RR DR									
	71370 05002		S	S				L	1			
	71380 05002		S	S				R	1			
	[05]		ROD-RR DR INSIDE HANDLE									
	71371 05010		S	S				L	1			
	71372 05010		S	S				R	1			
	[06]		ROD-RR DR ACTUATOR									
	71399 05020		S	S				B	2			
	[07]		SHIM-DR STRIKER									
	72296 03000		S	S					A			
	[08]		HANDLE A-DR INSIDE									
	72410 05010		S	S				L	1			
	72420 05010		S	S				R	1			

7210

REAR DOOR OPENING SYSTEM

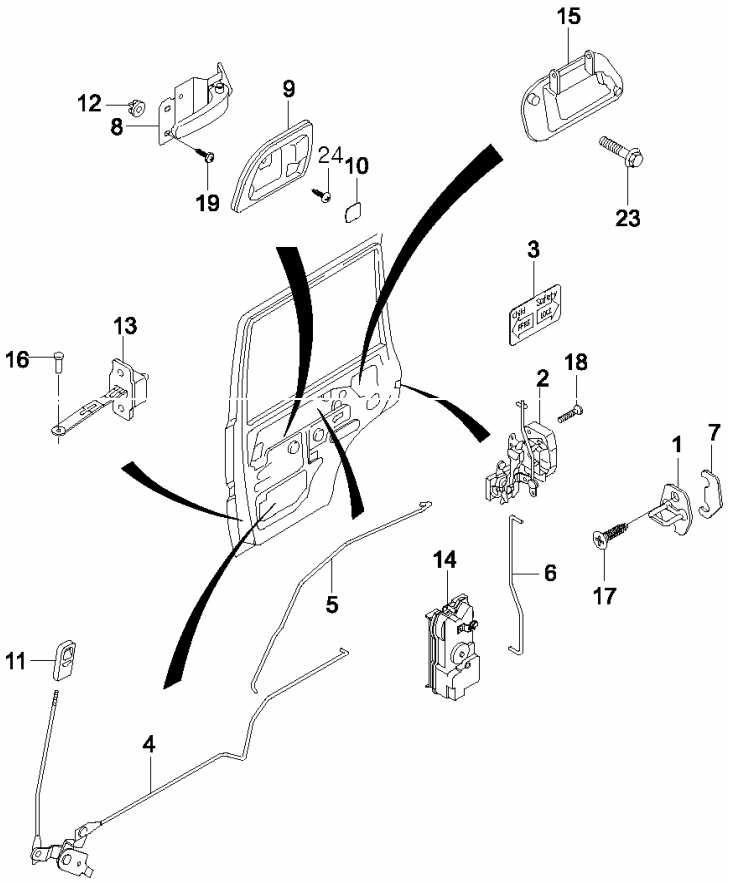

KEY NO.		PART NAME										
			ENGINE							APPLICATION		
ITC	PART NO.	T/M	G23D	G32D			OPTION	L/R	Q'TY	FROM	TO	REMARK
	[09]		BEZEL A-DR INSIDE									
	72430 05010		S	S				L	1			
	72440 05010		S	S				R	1			
	[10]		CAP-DR INSIDE HANDLE BEZEL MTG									
	72424 05010		S	S				L	1			
	72434 05010		S	S				R	1			
	[11]		KNOB-DR SAFETY LOCK									
	72470 05000		S	S				B	2			
	[12]		GROMMET-DR INSIDE HANDLE MTG									
	72472 05000		S	S				B	6			
	[13]		CHECKER A-RR DR									
	72980 05010		S	S				B	2			
	[14]		ACTUATOR A-DR LOCK(RR)									
	88360 05050		S	S				L	1			
	88360 05060		S	S				R	1			
	[15]		HANDLE A-RR DR OUTSIDE									
	73450 05010		S	S				L	1			
	73460 05010		S	S				R	1			
	[16]		PIN-DR CHECKER MTG									
	71297 05002		S	S				B	2			

7210

REAR DOOR OPENING SYSTEM

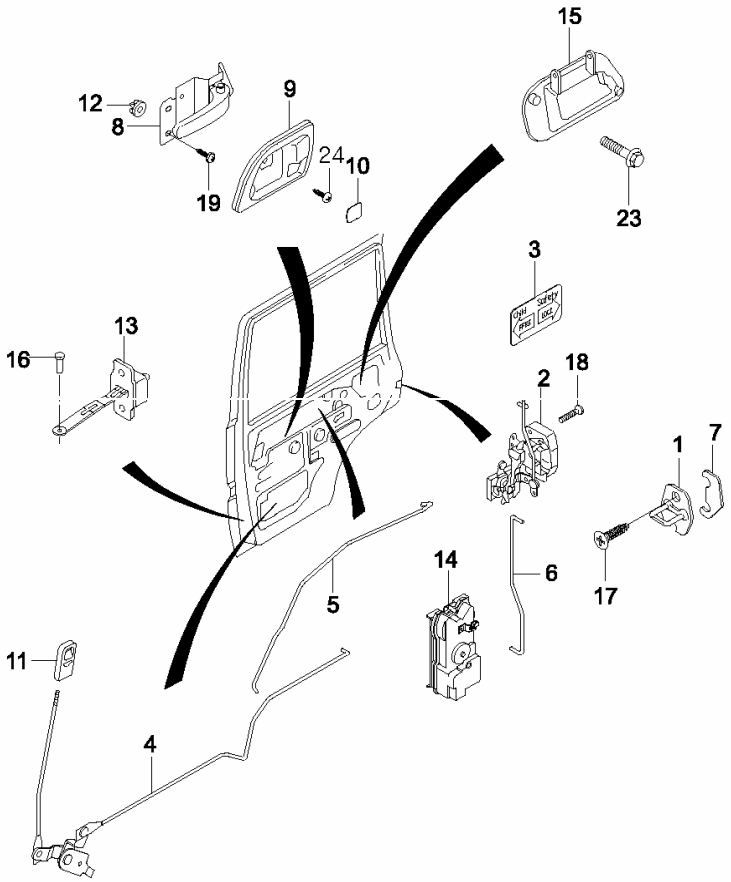

KEY NO.		PART NAME										
ITC	PART NO.	T/M	ENGINE G23D	ENGINE G32D	ENGINE	ENGINE	OPTION	L/R	Q'TY	APPLICATION FROM	APPLICATION TO	REMARK
	[17] 93685 80301		SCREW-COUNTER SUNK S	S				B	4			M8 X 1.25
	[18] 71209 05001		SCREW-LATCH MTG S	S				B	6			
	[19] 93804 6016D		TAP'G SCREW-TRUSS S	S				B	6			M6 X 16
	[23] 91627 06081		BOLT-HEX FLANGE S	S				B	4			M6 X 1.0
	[24] 93804 5012B		TAP'G SCREW-TRUSS S	S				B	2			M5 X 12

7215

REAR DOOR TRIM

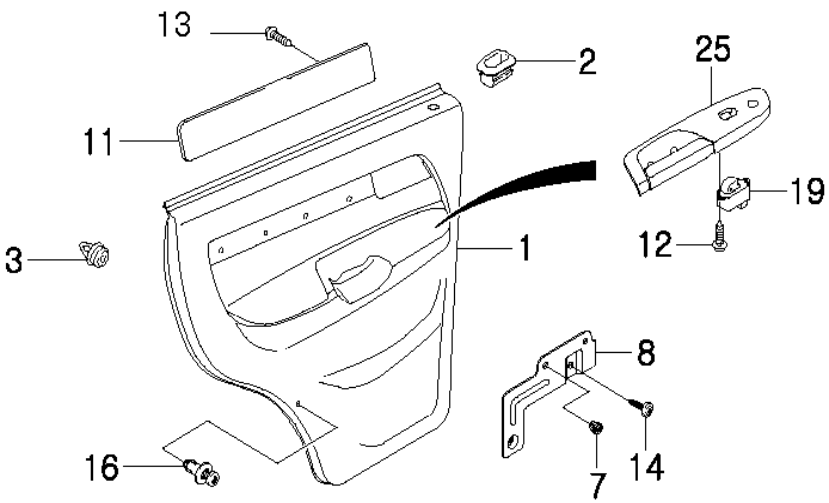

KEY NO.		PART NAME										
			ENGINE							APPLICATION		
ITC	PART NO.	T/M	G23D	G32D			OPTION	L/R	Q'TY	FROM	TO	REMARK
	[01]		PANEL A-REAR DOOR TRIM COMPL									
	73201 05502		S	S			CLOTH TYPE	L	1			
	73201 05552		S	S			LEATHER TYPE	L	1			
	73202 05502		S	S			CLOTH TYPE	R	1			
	73202 05552		S	S			LEATHER TYPE	R	1			
			REAR DOOR TRIM									
	73201 05900		S	S			CLOTH TYPE	L	1			
	73201 05950		S	S			LEATHER TYPE	L	1			
	73202 05900		S	S			CLOTH TYPE	R	1			
	73202 05950		S	S			LEATHER TYPE	R	1			
	[02]		GROMMET-FRONT DR SAFETY LOCK ROD									
	71273 05001		S	S				B	2			
	[03]		FASTENER-DOOR TRIM MOUNTING									
	72215 05020		S	S				B	16			
	[07]		GROMMET-DOOR INSIDE HANDLE MOUNTING									
	72472 05000		S	S				B	4			
	[08]		BRAKET A-REAR DOOR TRIM									
	73610 05501		S	S				L	1			
	73620 05501		S	S				R	1			M4 X 12
	[11]		MOULDING-DOOR TRIM(-W/G)									
	72236 05500		S	S				L	1			M6 X 16
	72246 05500		S	S				R	1			

7215

REAR DOOR TRIM

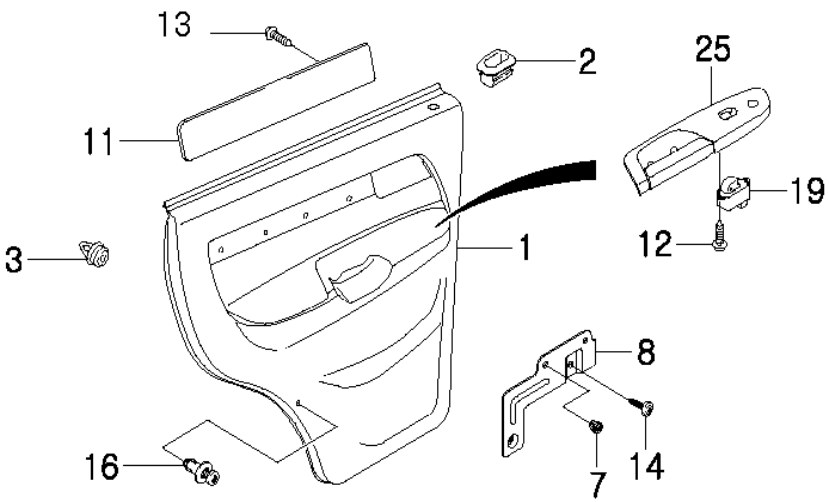

KEY NO.		PART NAME										
			ENGINE							APPLICATION		
ITC	PART NO.	T/M	G23D	G32D			OPTION	L/R	Q'TY	FROM	TO	REMARK
	[12] 93704 4012D		TAP'G SCREW-PAN S	S				B	4			M4 X 12
	[13] 98464 4010D		T/SCREW-TRUSS SEMS S	S				B	10			M4 X 10
	[14] 93804 6016D		TAP'G SCREW-TRUSS S	S				B	6			
	[16] 72290 05000		SCRIVET-DOOR TRIM MOUNTING S	S				B	2			
	[19] 85830 05700		SWITCH A-POWER WINDOW,SUB S	S				B	2			
	[25]		GRIP HANDLE-FRONT DOOR TRIM									
	73651 05500		S	S				L	1			
	73661 05500		S	S				R	1			

7220

REAR WINDOW LIFTER

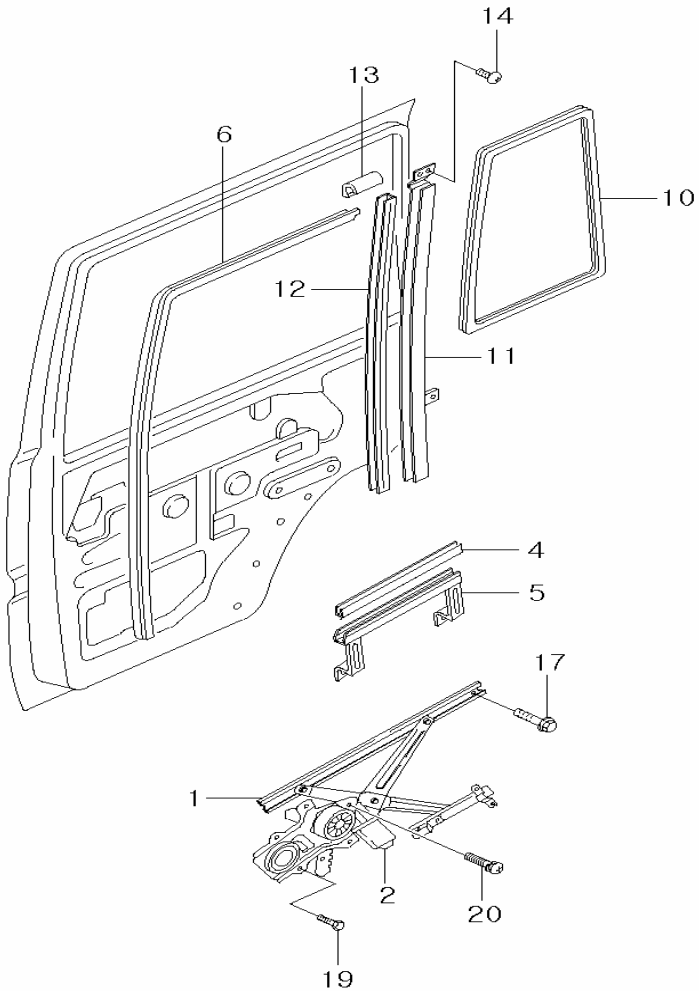

KEY NO.		PART NAME										
ITC	PART NO.	T/M	ENGINE G23D	ENGINE G32D	ENGINE	ENGINE	OPTION	L/R	Q'TY	APPLICATION FROM	APPLICATION TO	REMARK
	[01]		REGULATOR A-REAR DOOR POWER WINDOW									
	73301 05106		S	S				L	1			
	73302 05106		S	S				R	1			
	[02]		MOTOR A-POWER WINDOW									
	88100 05002		S	S				L	1			
	88100 05102		S	S				R	1			
	[04]		SEAL STRIP-REAR DOOR GLASS GRIP									
	73314 05000		S	S				B	2			
	[05]		GRIP A-REAR DOOR GLASS									
	73312 05002		S	S				B	2			
	[06]		GLASS RUN-REAR DOOR WINDOW									
	72931 05001		S	S				L	1			
	72941 05001		S	S				R	1			
	[10]		WEATHER STRIP-REAR DOOR FIXED GLASS									
	72933 05000		S	S				L	1			
	72943 05000		S	S				R	1			
	[11]		CHANNEL A-REAR DOOR DIVISION									
	72910 05002		S	S				L	1			
	72920 05002		S	S				R	1			
	[12]		GLASS RUN-REAR DOOR DIVISION CHANNEL									
	72932 05000		S	S				B	2			

7220

REAR WINDOW LIFTER

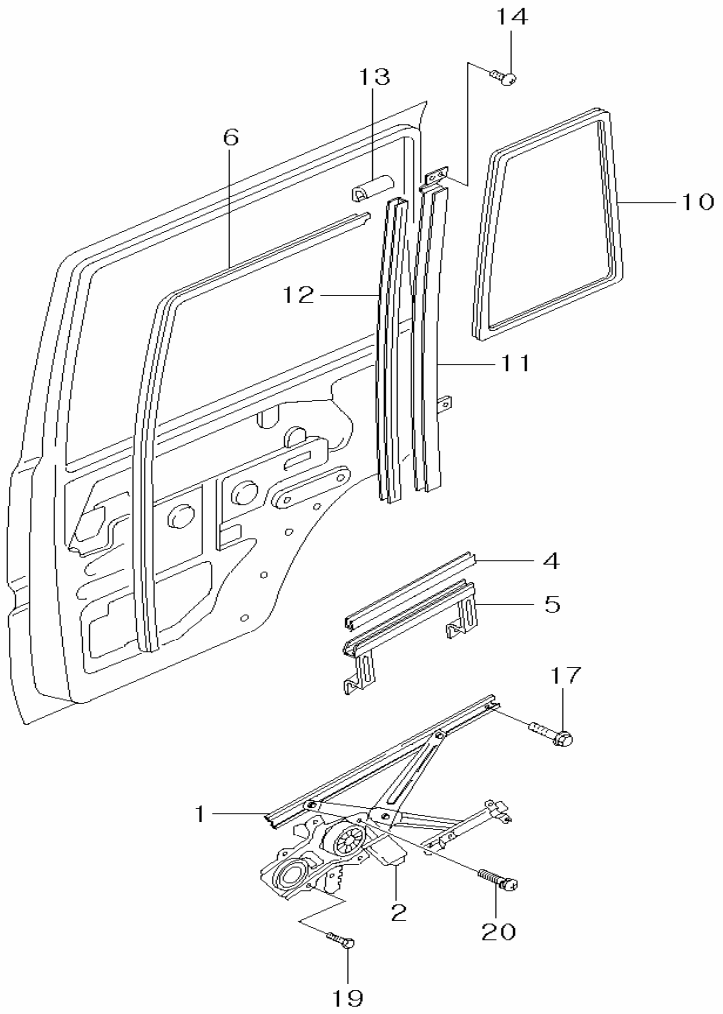

KEY NO.		PART NAME										
			ENGINE							APPLICATION		
ITC	PART NO.	T/M	G23D	G32D			OPTION	L/R	Q'TY	FROM	TO	REMARK
	[13]		END CAP-REAR DOOR GLASS RUN INSIDE									
	72935 05001		S	S				L	1			
	72945 05001		S	S				R	1			
	[14]		SCREW-REAR DOOR DIVISION CHNL MOUNTING									
	72914 05001		S	S				B	4			
	[17]		SCREW-HEXAGON SEMS									
	98207 06121		S	S				B	4			M6 X 1.0 X 12
	[19]		BOLT-HEXAGONANGE									
	91627 0610D		S	S				B	8			M6 X 1.0
	[20]		SCREW-PAN SEM'S									
	98054 0610D		S	S				B	6			

7221

REAR WEATHER STRIP

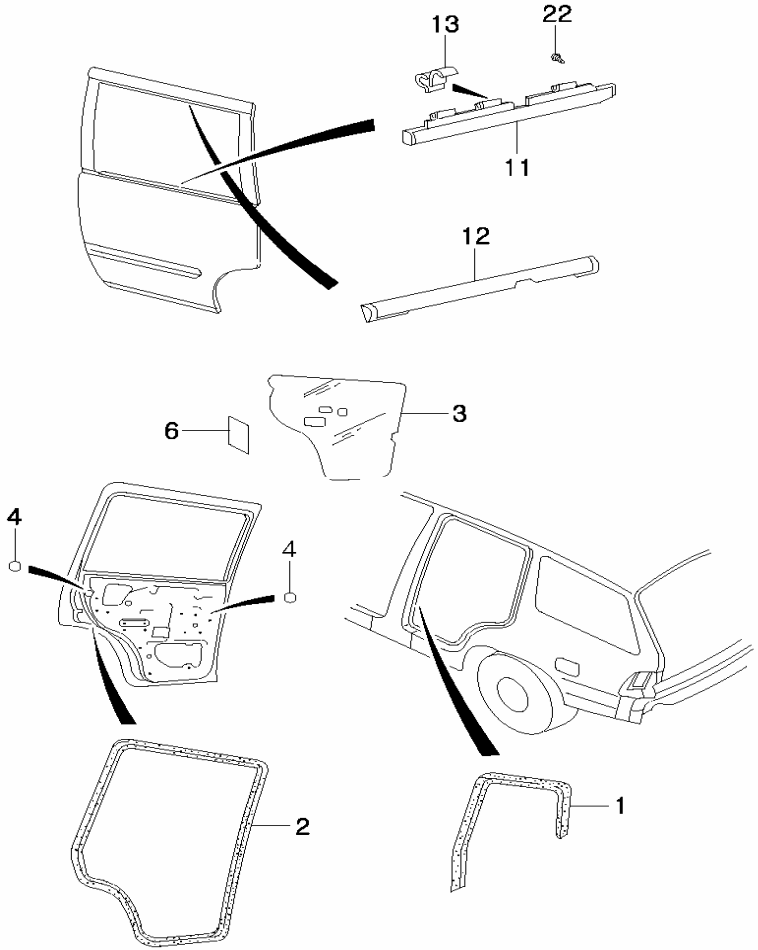

KEY NO.		PART NAME										
			ENGINE							APPLICATION		
ITC	PART NO.	T/M	G23D	G32D			OPTION	L/R	Q'TY	FROM	TO	REMARK
	[01]		WEATHER STRIP-REAR DOOR BODY SIDE									
	73110 05002		S	S				L	1			
	73120 05002		S	S				R	1			
	[02]		WEATHER STRIP A-REAR DOOR SIDE OPENING									
	73130 05003		S	S				L	1			
	73140 05003		S	S				R	1			
	[03]		SEAL-REAR DOOR TRIM									
	73291 05103		S	S				B	2			
	[04]		TAPE-DOOR TOOLING HOLE SEALING									
	72191 05000		S	S				B	4			
	[06]		TAPE-DOOR TRIM SEAL									
	72292 05000		S	S				B	4			
	[11]		WEATHER STRIP A-REAR DOOR BELT OUTSIDE									
	73510 05001		S	S				L	1			
	73520 05001		S	S				R	1			
	[12]		MOULDING A-REAR DOOR FRAME									
	73530 05003		S	S				L	1			
	73540 05003		S	S				R	1			
	[13]		CLIP-DOOR BELT OUTSIDE WEATHER STRIP MOUNTING									
	72512 05001		S	S				B	10			

7221

REAR WEATHER STRIP

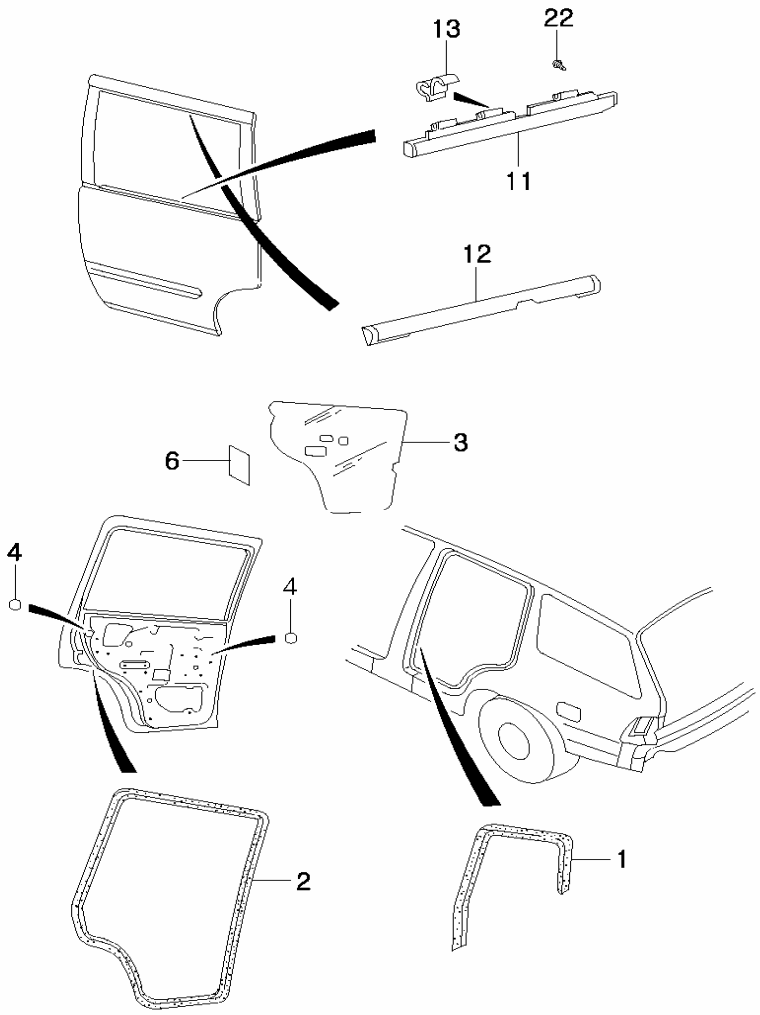

KEY NO.		PART NAME										
			ENGINE							APPLICATION		
ITC	PART NO.	T/M	G23D	G32D			OPTION	L/R	Q'TY	FROM	TO	REMARK
	[22] 93814 4008B		TAP'G SCREW-TRUSS S	S				B	4			M4 X 8

7310

TAIL GATE LOCK

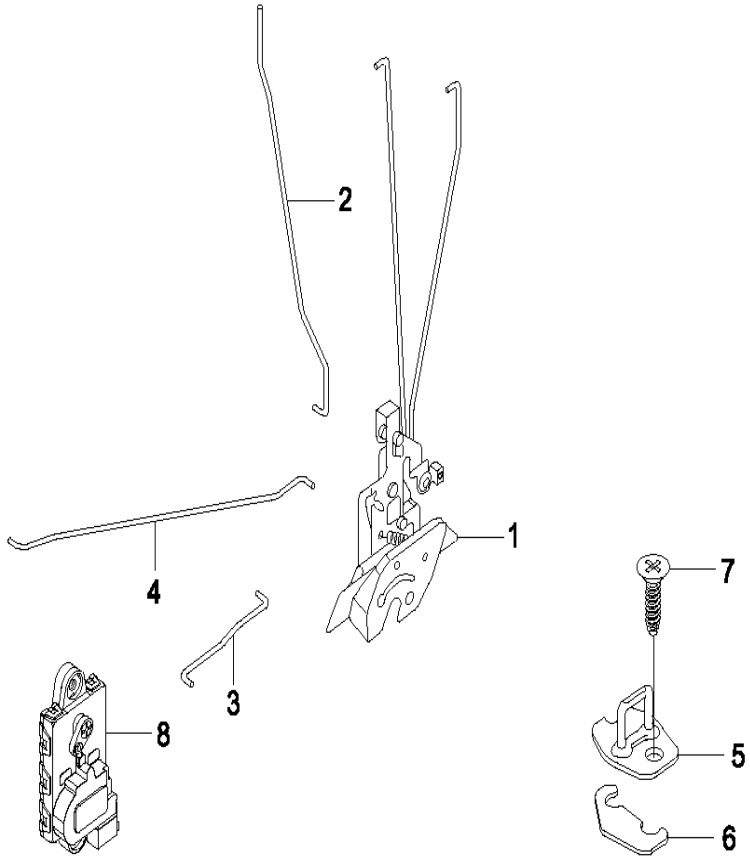

KEY NO.		PART NAME										
			ENGINE							APPLICATION		
ITC	PART NO.	T/M	G23D	G32D			OPTION	L/R	Q'TY	FROM	TO	REMARK
	[01] 71417 05001		LATCH A-TAIL GATE S	S					1			
	[02] 71451 05000		ROD-TAIL GATE SAFETY KNOB S	S					1			
	[03] 71470 05020		ROD-TAIL GATE DOOR S	S					1			
	[04] 71476 05002		ROD-TAIL GATE LOCK S	S					1			
	[05] 72290 03000		STRIKER A-DOOR S	S					1			
	[06] 72296 03000		SHIM-DOOR STRIKER S	S					1			
	[07] 93685 80301		SCREW-COUNTER SUNK S	S					2			M 8X 1.25
	[08] 88370 05050		ROD ACTUATOR A-DR LOCK,TAIL GATE S	S					1			

7330

HEAD LINING

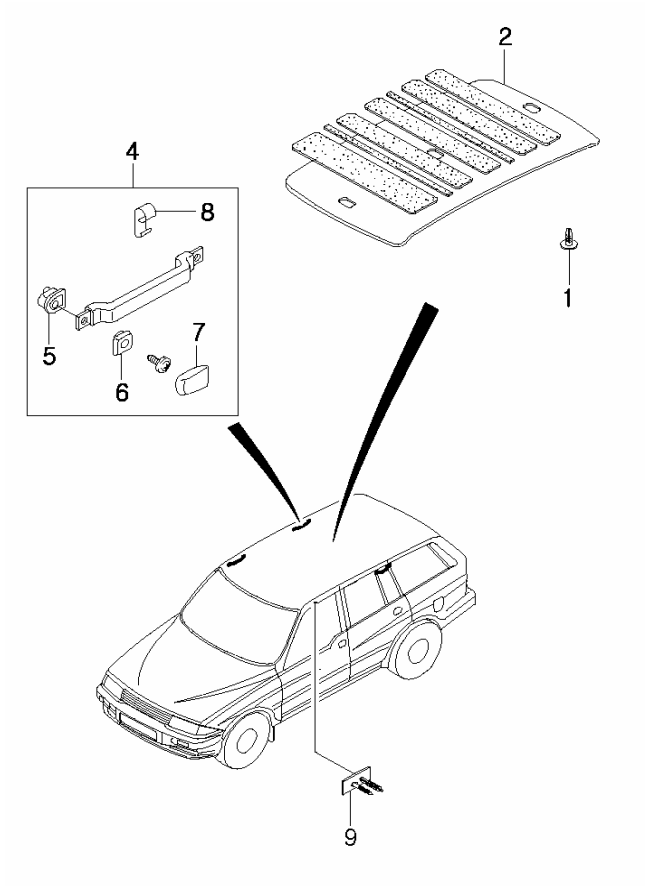

KEY NO.		PART NAME										
			ENGINE							APPLICATION		
ITC	PART NO.	T/M	G23D	G32D			OPTION	L/R	Q'TY	FROM	TO	REMARK
	[01]		FASTENER-TREE TYPE									
	77515 08000		S	S					3			
	[02]		HEAD LINING A									
	77510 05700		S	S					1			
	[04]		HANDLE A-ROOF ASSIST									
	77610 05003		S	S					1			FRT
	77620 05003		S	S					2			RR
	[05]		HOLDER-ROOF ASSIST HANDLE NO.1									
	77612 05001		S	S					2			FRT
	77612 05001		S	S					4			RR
	[06]		HOLDER-ROOF ASSIST HANDLE NO.2									
	77613 05000		S	S					2			FRT
	77613 05000		S	S					4			RR
	[07]		CAP-ROOF ASSIST HANDLE									
	77615 05001		S	S					2			FRT
	77615 05001		S	S					4			RR
	[08]		COAT HOOK									
	77631 05000		S	S					2			
	[09]		FASTENER-TREE TYPE									
	R101D-0085		S	S					2			

7410

FRONT SEAT

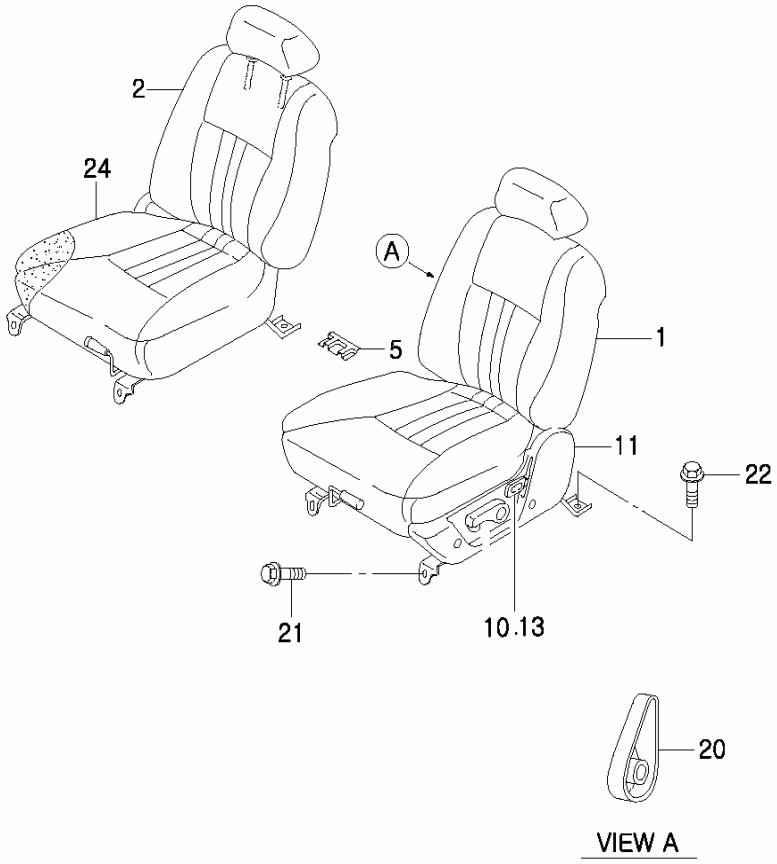

KEY NO.		PART NAME										
			ENGINE							APPLICATION		
ITC	PART NO.	T/M	G23D	G32D			OPTION	L/R	Q'TY	FROM	TO	REMARK
	[01]		SEAT A-FRONT									
	74001 05744		S	S			CLOTH	L	1			
			S	S			SEAT WAMER					
	74001 05833		S	S			LEATHER	L	1			
			S	S			HEIGHT ADJUST					
			S	S			SEAT WAMER					
			S	S			LUMBER SUPPORT					
	[02]		SEAT A-FRONT									
	74002 05892		S	S			COLTH	R	1			
	74002 05623		S	S			LEATHER	R	1			
	[05]		COVER-FRONT SEAT MOUNTING REAR OUTER									
	74115 05000		S	S				L	1			
	74116 05000		S	S				R	1			
	[10]		RECLINER A									
	R101J-0024		S	S				L	1			
	R101J-0136		S	S				R	1			
	[11]		SHIELD COVER-FRONT									
	R101J-0021		S	S			COLTH	L	1			
	R101J-0022		S	S			LEATHER	L	1			DLX
	R101J-0034		S	S				R	1			
	[13]		KNOB RECLINER-FRONT									
	R101J-0019		S	S				B	2			

7410

FRONT SEAT

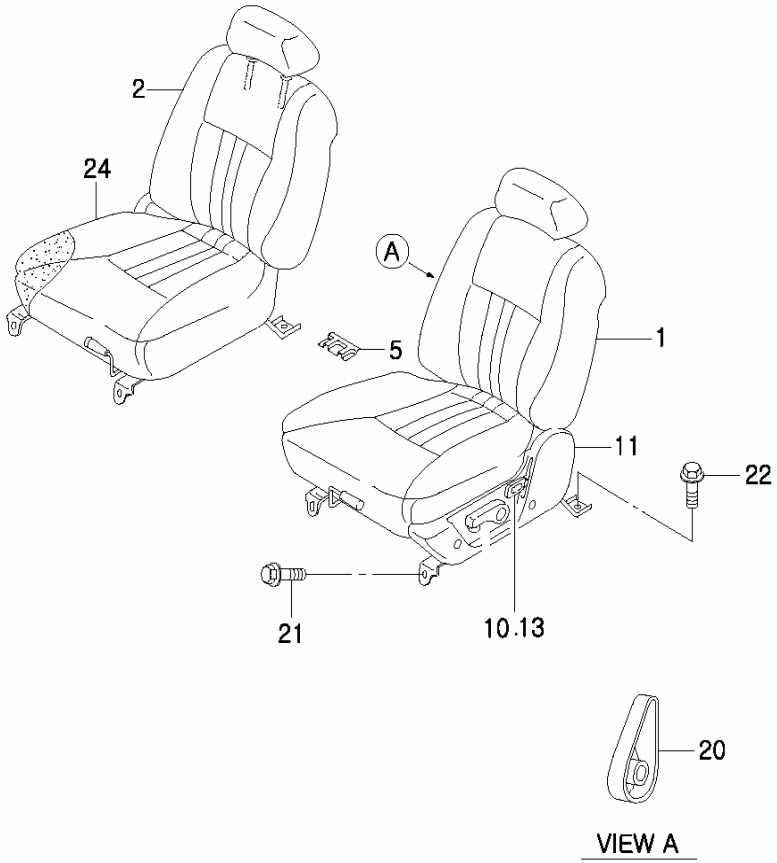

KEY NO.		PART NAME										
			ENGINE							APPLICATION		
ITC	PART NO.	T/M	G23D	G32D			OPTION	L/R	Q'TY	FROM	TO	REMARK
	[20] R101J-0023		LEVER A-LEVER/SUPPORT S	S			LUMBER SUPPORT		1			
	[21] 95917 0830D		BOLT-HEX SEMS S	S				B	6			M8 X 1.25 X 30
	[22] 95917 0840D		BOLT-HEX SEMS S	S				B	2			M8 X 1.25 X 40
	[24] 74008 050A0		COVERING-SEAT S	S					1			

7420

FRONT SEAT PARTS

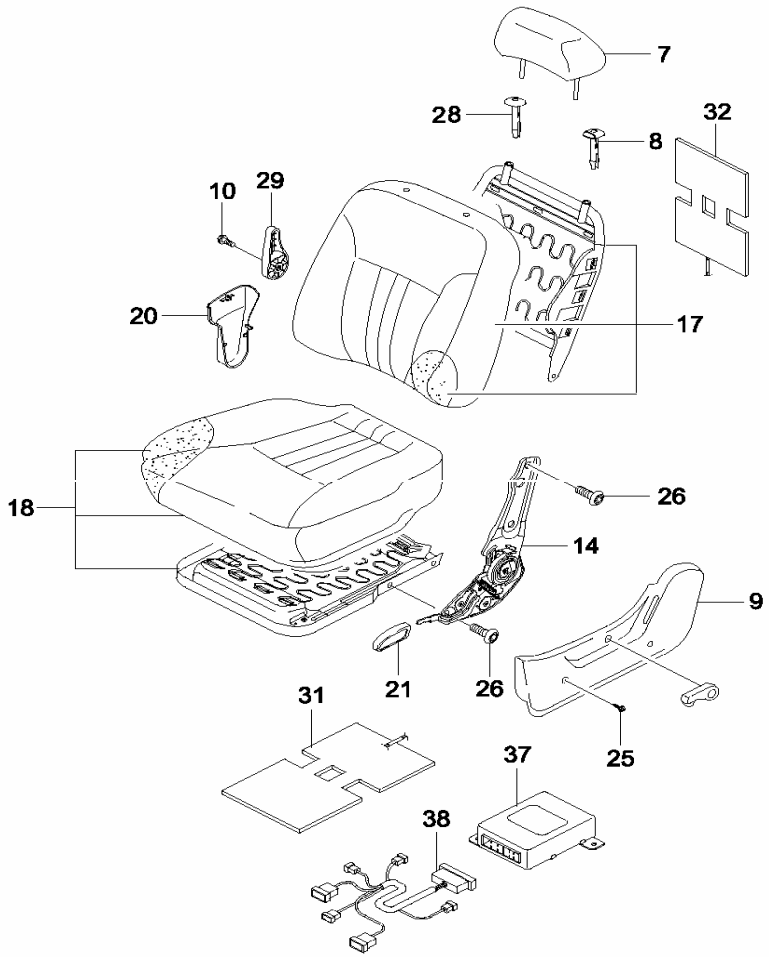

KEY NO.		PART NAME										
			ENGINE							APPLICATION		
ITC	PART NO.	T/M	G23D	G32D			OPTION	L/R	Q'TY	FROM	TO	REMARK
	[07]		HEAD REST A-FRONT									
	75106 05000		S	S			CLOTH		1			
	74103 05000		S	S			CLOTH		1			
	74105 05000		S	S			LEATHER		1			
	[08]		SLEEVE A-HEAD REST									
	R101J-0008		S	S				B	2			
	[09]		SHIELD COVER-FRONT									
	R101J-0021		S	S			COLTH	L	1			
	R101J-0022		S	S			LEATHER	L	1			DLX
	R101J-0034		S	S				R	1			
	[10]		SCREW									
	R201J-0022		S	S				B	2			
	[14]		RECLINER A									
	R101J-0024		S	S				L	1			
	R101J-0136		S	S				R	1			
	[17]		SEAT BACK A-FRONT									
	9701405		S	S				L	1			
	9701408		S	S				R	1			
	[18]		CUSHION A-FRONT SEAT									
	9701401		S	S			FLAT WOVEN	L	1			
	9701402		S	S			FLAT WOVEN	R	1			

7420

FRONT SEAT PARTS

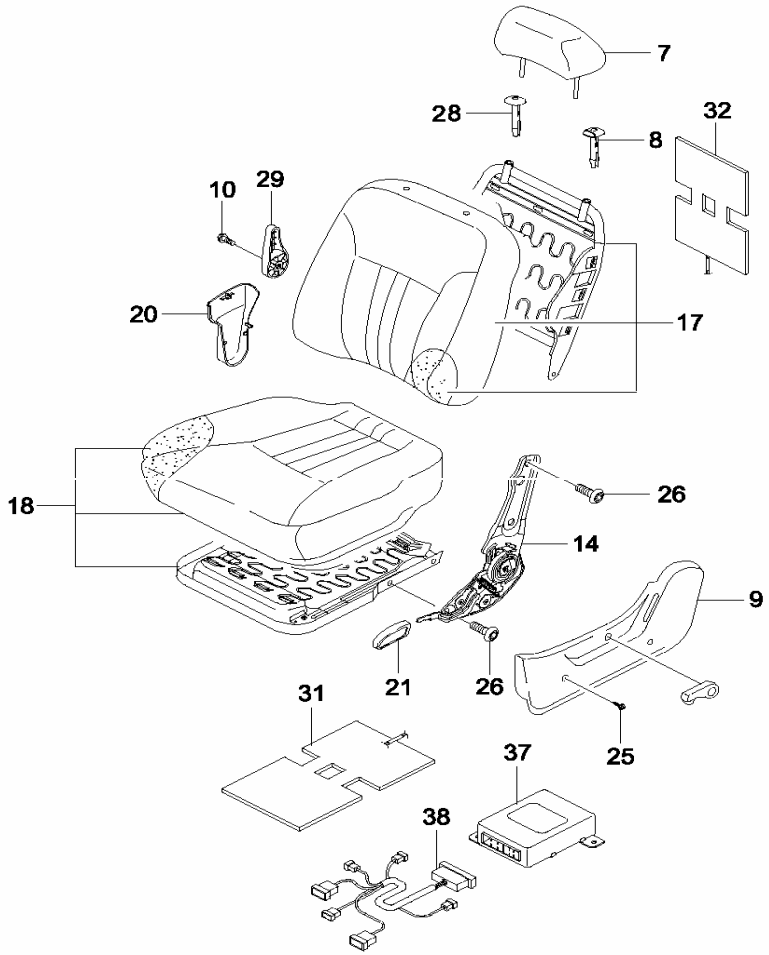

KEY NO.		PART NAME										
			ENGINE							APPLICATION		
ITC	PART NO.	T/M	G23D	G32D			OPTION	L/R	Q'TY	FROM	TO	REMARK
	[20]		HINGE COVER-FRONT									
	R101J-0033		S	S				L	1			
	R101J-0018		S	S				R	1			
	[21]		KNOB RECLINER-FRONT									
	R101J-0019		S	S				B	2			
	[26]		SOCKET BOLT,M10X16.7									
	R201J-0007		S	S				B	4			
	[28]		SLEEVE-HEAD REST									
	R101J-0009		S	S				B	2			
	[29]		LEVER A-LUMBER/SUPPORT									
	R101J-0023		S	S					1			
	[31]		WARMER A-FRT/CUSHION									
	R101J-0011		S	S					1			
	[32]		WARMER A-FRONT/BACK									
	R101J-0004		S	S					1			
	[37]		UNIT A-SEAT WARMER									
	87310 05800		S	S					1			
	[38]		WIRING A-SEAT/WARMER									
	R101J-0121		S	S					1			

7430

FRONT SEAT BELT

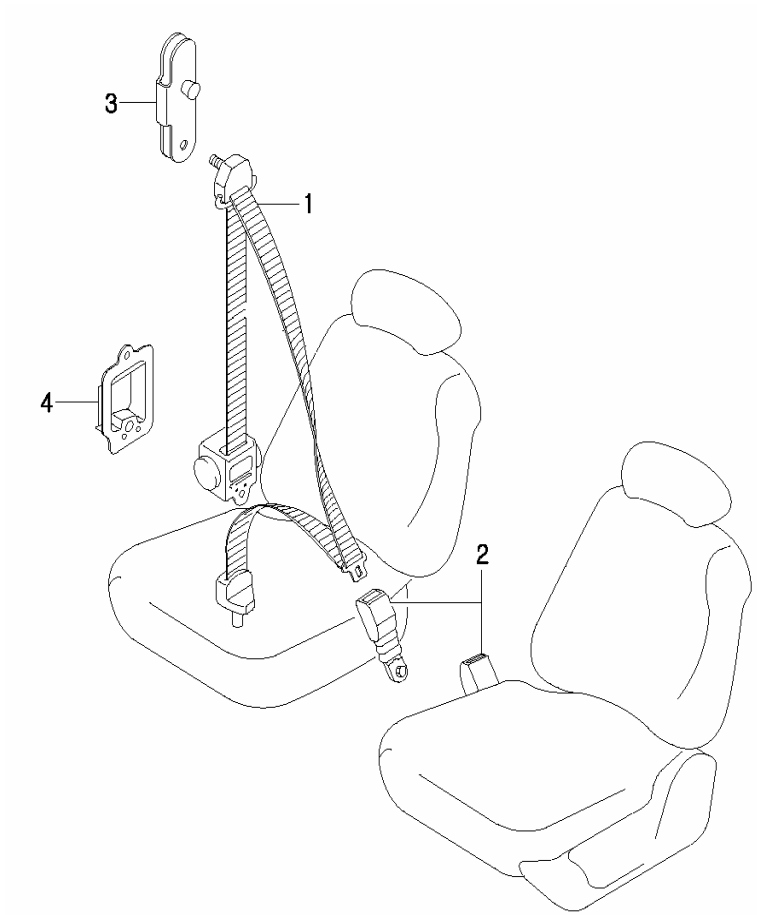

KEY NO.		PART NAME										
			ENGINE							APPLICATION		
ITC	PART NO.	T/M	G23D	G32D			OPTION	L/R	Q'TY	FROM	TO	REMARK
	[01]		SEAT BELT A-FRT ELR 3PT									
	R101J-0115		S	S				L	1			
	R101J-0116		S	S				R	1			
	[02]		BUCKLE A-FRONT									
	R101J-0113		S	S				L	1			DRIVER
	R101J-0114		S	S				R	1			PASSENGER
	[03]		HEIGHT ADJUSTER A-FRONT SEAT BELT									
	R101J-0111		S	S				B	2			
	[04]		DUST COVER-FRT SEAT BELT									
	74634 05001		S	S				L	1			
	74635 05001		S	S				R	1			

7440

SEAT GUIDE RAIL

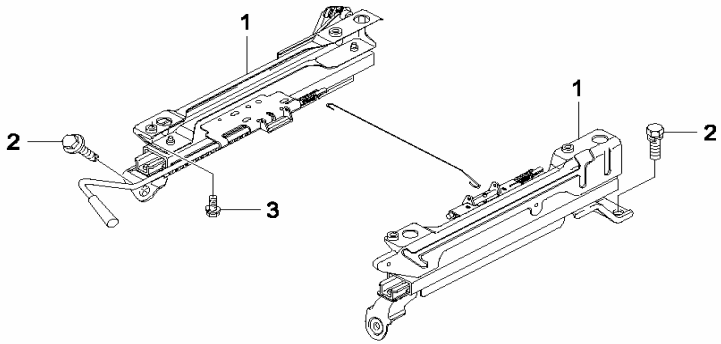

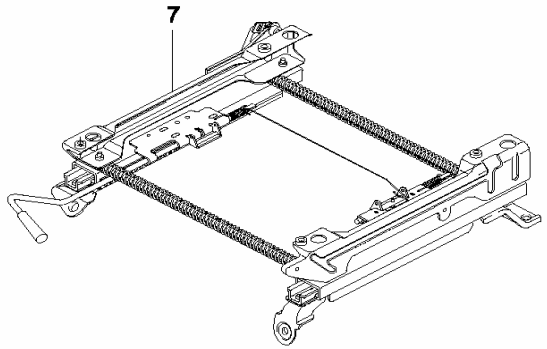

KEY NO.		PART NAME										
			ENGINE							APPLICATION		
ITC	PART NO.	T/M	G23D	G32D			OPTION	L/R	Q'TY	FROM	TO	REMARK
	[01]		GUIDE RAIL A-PASS.MNL									
	74110 05020		S	S				L	1			PASS.MNL
	74110 05030		S	S				R	1			PASS.MNL
	[02]		BOLT-HEXAGON SEMS									
	95837 1030D		S	S					8			M10 X 1.25 X 30
	[03]		BOLT									
	48006		S	S					8			
	[07]		GUIDE RAIL A-DRIVER									
	74110 05000		S	S					1			DRIVE.MNL
	74110 05070		S	S			LEATHER		1			DRIVE. POWER

7510

REAR SEAT

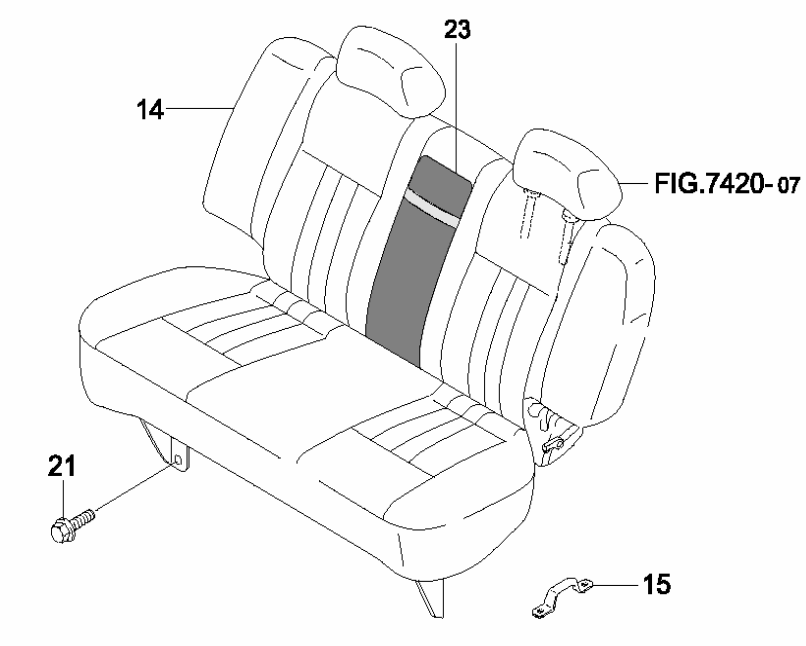

KEY NO. ITC	PART NO.	T/M	ENGINE G23D	ENGINE G32D			OPTION	L/R	Q'TY	APPLICATION FROM	APPLICATION TO	REMARK
	[14]		SEAT A-REAR									
	75000 05581		S	S			CLOTH		1			
	75000 05601		S	S			LEATHER REAR FOLDING REAR-50:50 SPLIT		1			
	75000 05272		S	S			LEATHER HEADREST-FIXED REAR-60:40 SPLIT		1			
	[15]		STRIKER-REAR SEAT									
	75910 05001		S	S					2			
	[21]		BOLT-HEXAGON SEMS									
	95917 0830D		S	S					4			M8 X 1.25 X 30
	[23]		A/REST A-CENTER,DLX									
	R101J-0070		S	S			CLOTH		1			
	R101J-0071		S	S			LEATHER REAR-60:40 SPLIT		1			

7520

REAR SEAT PARTS

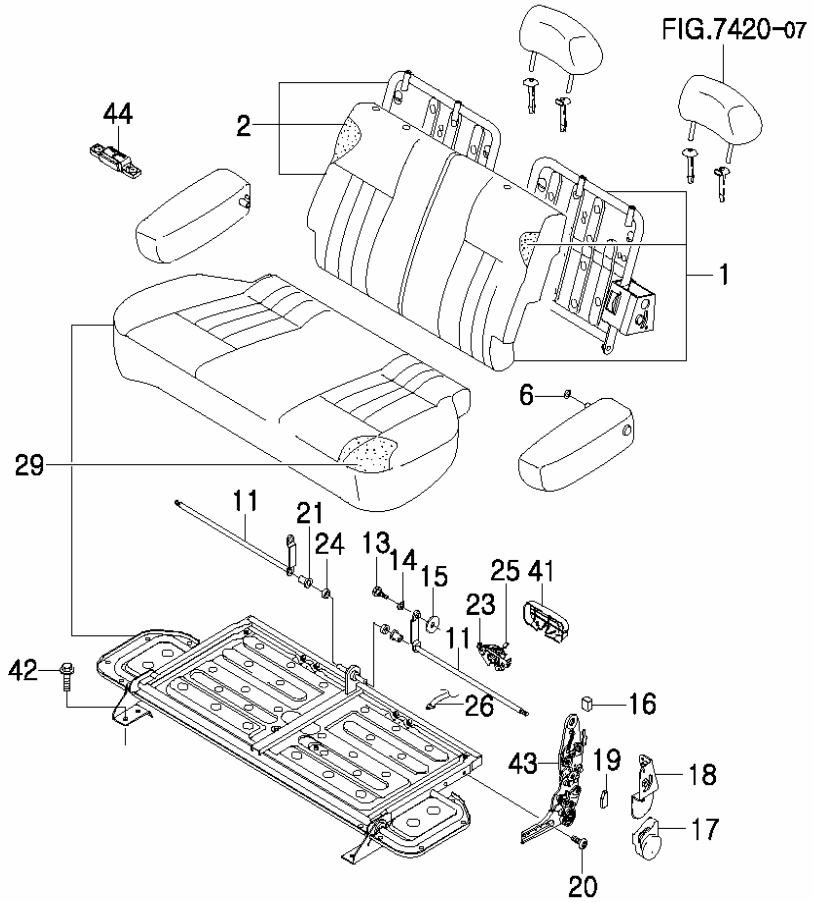

KEY NO.		PART NAME										
ITC	PART NO.	T/M	ENGINE G23D	ENGINE G32D	ENGINE	ENGINE	OPTION	L/R	Q'TY	APPLICATION FROM	APPLICATION TO	REMARK
	[01]		SEAT BACK A-REAR									
	9701411		S	S			FLAT WOVEN	L	1			
	9600685		S	S			LEATHER		1			
	[02]		SEAT BACK A-REAR									
	9701412		S	S			FLAT WOVEN	R	1			
	9600659		S	S			LEATHER		1			
	[06]		REAR SEAT ARM REST O-RING									
	75600 05000		S	S			CLOTH		4			
	[11]		DRIVER A									
	52191		S	S					2			
	[13]		BOLT									
	R201K -0064		S	S					1			
	[14]		SPRING-TENSION									
	R201K -0057		S	S					1			
	[15]		HINGE BUSH									
	R201K-0063		S	S					2			
	[16]		SPECIAL BOLT-3.2									
	R201K-0059		S	S					2			

7520

REAR SEAT PARTS

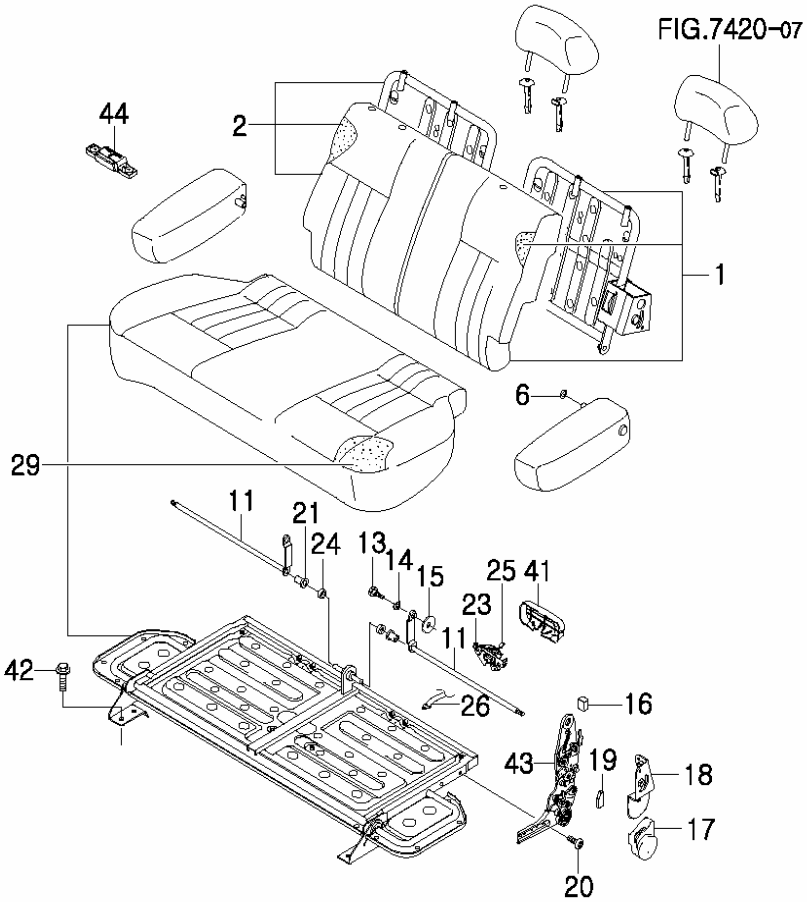

KEY NO.		PART NAME										
ITC	PART NO.	T/M	ENGINE G23D	ENGINE G32D	ENGINE	ENGINE	OPTION	L/R	Q'TY	APPLICATION FROM	APPLICATION TO	REMARK
	[17]		COVER-RECLINER LOWER									
	0000534		S	S				L	1			
	0000535		S	S				R	1			
	[18]		RECLINER.COVER REAR									
	R101J-0051		S	S				L	1			
	R101J-0052		S	S				R	1			
	[19]		KNOB A									
	00536		S	S					1			
	[20]		SOCKET BOLT-ROUND									
	R201K-0055		S	S					8			
	[21]		BUSH-HINGE									
	R201K-0067		S	S					2			
	[23]		LOCKER A-R/C									
	R101J-0063		S	S					2			
	[24]		WASHER NYLON									
	R101J-0060		S	S					2			
	[25]		KNOB-LOCKER									
	58706		S	S					1			
	[26]		HOLDING STRAP A									
	R101J-0056		S	S					1			

7520

REAR SEAT PARTS

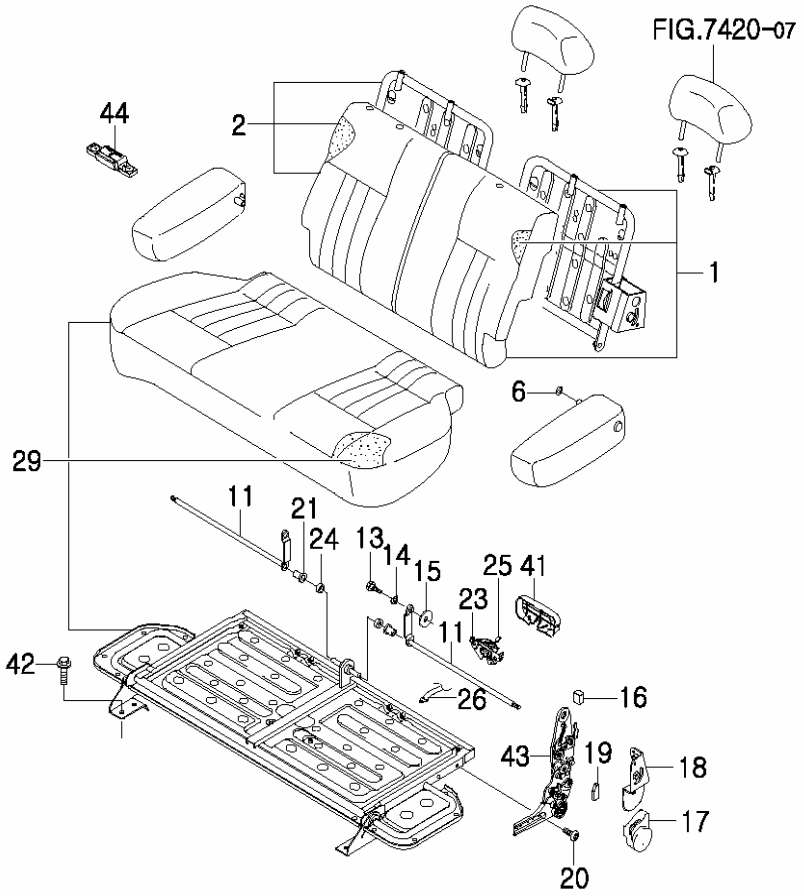

KEY NO.		PART NAME										
			ENGINE						APPLICATION		
ITC	PART NO.	T/M	G23D	G32D			OPTION	L/R	Q'TY	FROM	TO	REMARK
	[29]		CUSHION A-REAR SEAT									
	9701410		S	S			FLAT WOVEN		1			
	9600653		S	S			LEATHER		1			
	[41]		LOCKER COVER-REAR CUSHION									
	R101J-0059		S	S					2			
	[42]		BOLT-HEXAGON SEMS									
	95837 1030D		S	S					4			M10 X 1.25 X 30
	[43]		RECLINER A-REAR									
	R101J-0061		S	S				L	1			
	R101J-0062		S	S				R	1			
	[44]		LOCK HUB-REAR SEAT ARM REST									
	75103050A0		S	S					1			
									1			
									1			
									2			
									2			

7530

REAR SEAT BELT

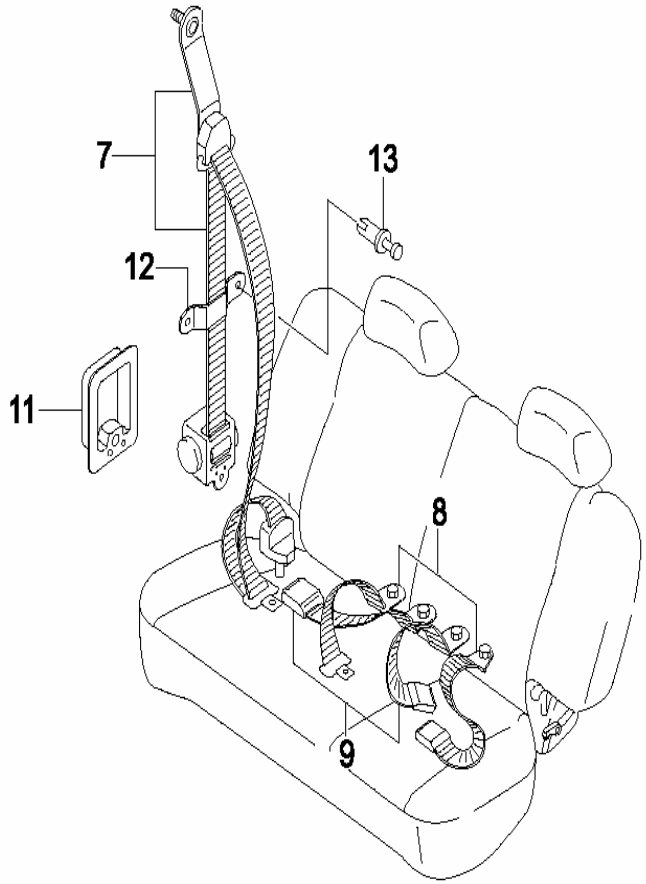

KEY NO.		PART NAME										
			ENGINE							APPLICATION		
ITC	PART NO.	T/M	G23D	G32D			OPTION	L/R	Q'TY	FROM	TO	REMARK
	[07] R101K-0005		SEAT BELT A-REAR 3PT ELR S	S				B	2			
	[08] R101K-0006		SEAT BELT A-REAR 2PT STATIC,CENTER S	S					1			
	[09] R101K-0007		WEBBING BUCKLE A-REAR CENTER S	S					3			
	[11] 75660 05000		DUST COVER-REAR SEAT BELT S	S					2			
	[12] 74636 05000		WEBBING GUIDE-SEAT BELT S	S					2			
	[13] 79717 05000		SCRIVET S	S					4			

7610

INSTRUMENT PANEL

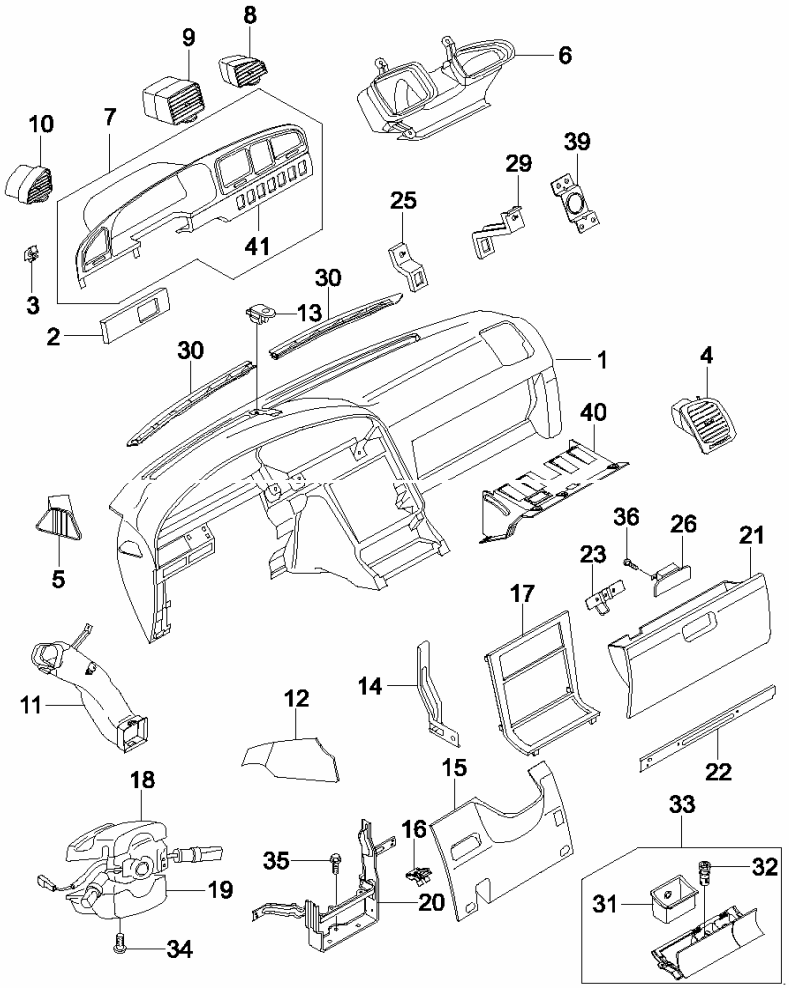

KEY NO.		PART NAME										
			ENGINE							APPLICATION		
I T C	PART NO.	T / M	G 2 3 D	G 3 2 D			OPTION	L / R	Q ' T Y	FROM	TO	REMARK
	[01] 76501 05409		CRASH PAD A-COMPLETE S	S					1			
	[02] 76530 05403		PNL A-CLUSTER FACIA LOWER S	S				L	1			
	[03] 76525 05000		NUT-SPRING S	S					1			M5
	[04] 69630 05403		LOUVER A-SIDE A/VENT S	S				R	1			
	[05] 69530 05402		COVER A-SIDE DEF NOZZEL S	S				L	1			
	69635 05402		S	S				R	1			
	[06] 69330 05400		DUCT A-CTR AIR VENT S	S					1			
	[07] 76550 05406		PNL A-CLUSTER FACIA S	S					1			
	[08] 69640 05403		LOUVER A-CTR A/VENT S	S				R	1			
	[09] 69610 05403		LOUVER A-CTR A/VENT S	S				L	1			

7610

INSTRUMENT PANEL

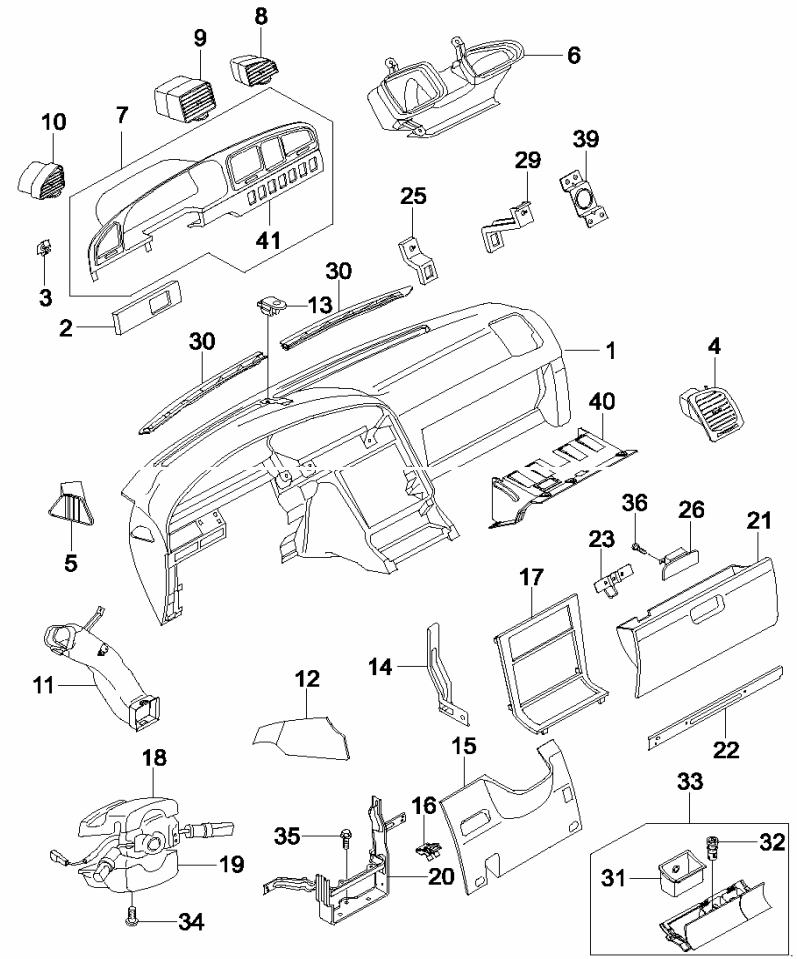

KEY NO.		PART NAME										
			ENGINE							APPLICATION		
ITC	PART NO.	T/M	G23D	G32D			OPTION	L/R	Q'TY	FROM	TO	REMARK
	[10]		LOUVER A-SIDE A/VENT									
	69620 05403		S	S				L	1			
	[11]		DUCT A-SIDE AIR VENT NO.2									
	69346 05400		S	S				L	1			
	[12]		COVER A-CRASH PAD CTR LOWER									
	76590 05404		S	S				L	1			
	77595 05404		S	S				R	1			
	[13]		BLANK'G COVER-S/SENSOR									
	69523 11000		S	S					1			
	[14]		BRKT A-CRASH PAD SIDE MTG									
	76526 05402		S	S				L	1			
	[14]		BRKT A-CRASH PAD SIDE MOUNTING									
	76524 05404		S	S				R	1			
	[15]		PANEL A-C/PAD LOWER MAIN									
	76560 05404		S	S				L	1			
	[16]		CLIP-TAIL GATE TRIM MOUNTING SPRING									
	71497 05000		S	S					3			
	[17]		PANEL A-CENTER FACIA(-W/G)									
	76580 05405		S	S					1			

7610

INSTRUMENT PANEL

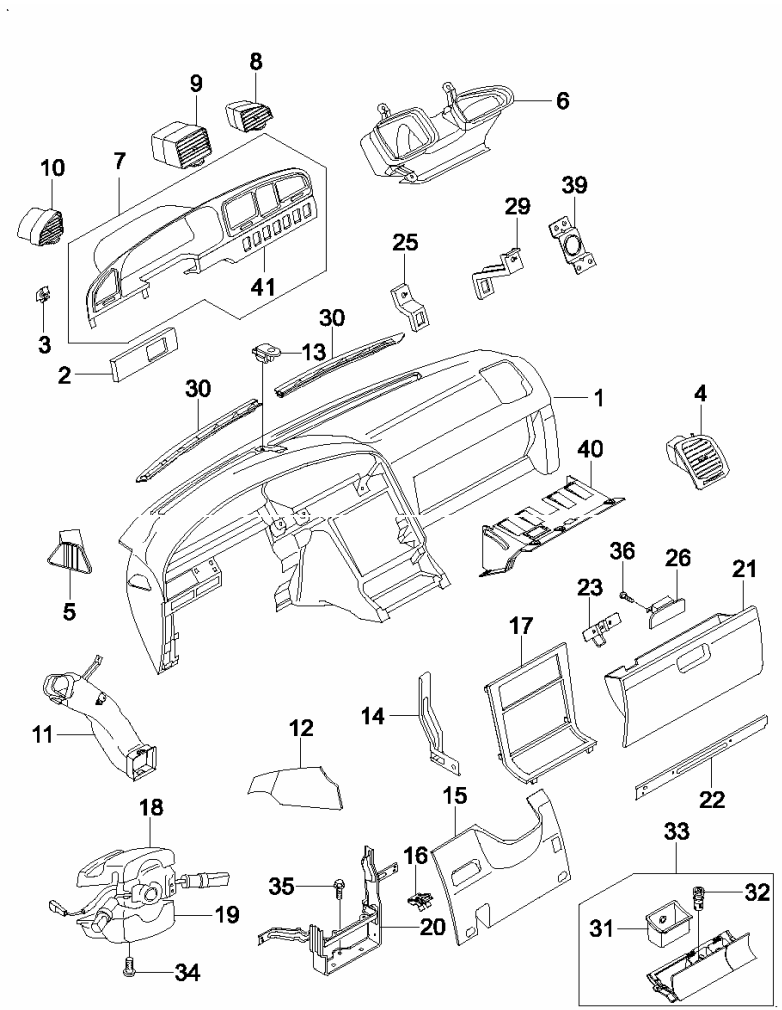

KEY NO.		PART NAME										
			ENGINE							APPLICATION		
ITC	PART NO.	T/M	G23D	G32D			OPTION	L/R	Q'TY	FROM	TO	REMARK
	[18] 76630 05501		PANEL A-SHROUD UPPER S	S					1			
	[19] 76640 05501		PANEL A-SHROUD LOWER S	S					1			
	[20] 76650 05404		BRKT A-CENTER SUPPOT S	S					1			
	[21] 77710 05405		BOX A-GLOVE S	S					1			
	[22] 76515 05404		BRAKET A-GLOVE BOX MOUNTING S	S					1			
	[23] 77750 05402		STRIKER A-GLOVE BOX S	S					1			
	[25] 76522 05402		BRAKET A-GAUGE MOUNTING NO.1 S	S					1			
	[26] 71080 05400		LOCK A-GLOVE BOX S	S					1			
	[29] 76523 05402		BRKT A-GAUGE MOUNTING NO.2 S	S					1			

7610

INSTRUMENT PANEL

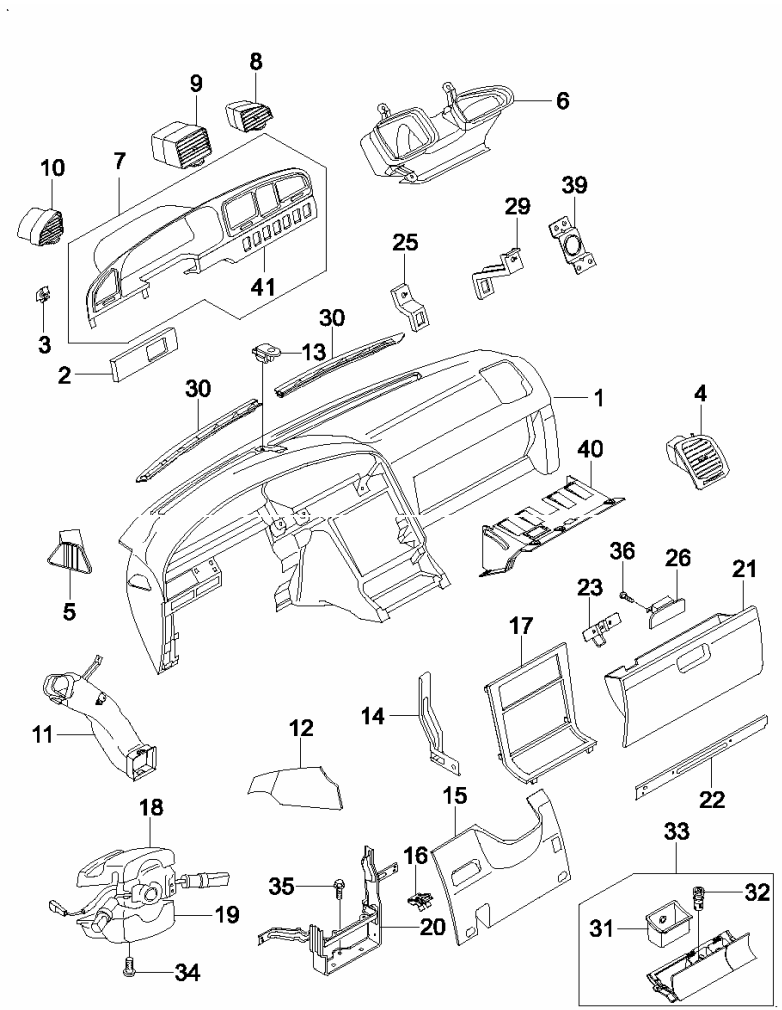

KEY NO. ITC	PART NO.	T/M	ENGINE G23D	ENGINE G32D	ENGINE	ENGINE	OPTION	L/R	Q'TY	APPLICATION FROM	APPLICATION TO	REMARK
	[30]		COVER-DEFR NOZZLE									
	69520 05402		S	S				L	1			
	69525 05402		S	S				R	1			
	[31]		TRAY-FRONT ASH TRAY									
	77946 05401		S	S					1			
	[32]		LIGHTER A-CIGAR									
	R112M-0001		S	S					1			
	[33]		ASH TRAY A-FRT(-W/G)									
	77940 05404		S	S					1			
	[34]		TAP'G SCREW-TRUSS									
	93804 50162		S	S					2			M5 X 16
	98064 0512B		S	S					1			M5 X 0.8 X 12
	[35]		SCREW-HEX SEMS									
	91504 06200		S	S					1			M6 X 1.0
	[36]		SCREW									
	93554 4020D		S	S					2			M4 X 0.7
	[39]		BRKT-CRASH PAD CENTER UPPER LOCATION									
	76513 05401		S	S					1			
	[40]		COVER-GLOVE BOX BEHIND									
	76520 05401		S	S					1			

7610

INSTRUMENT PANEL

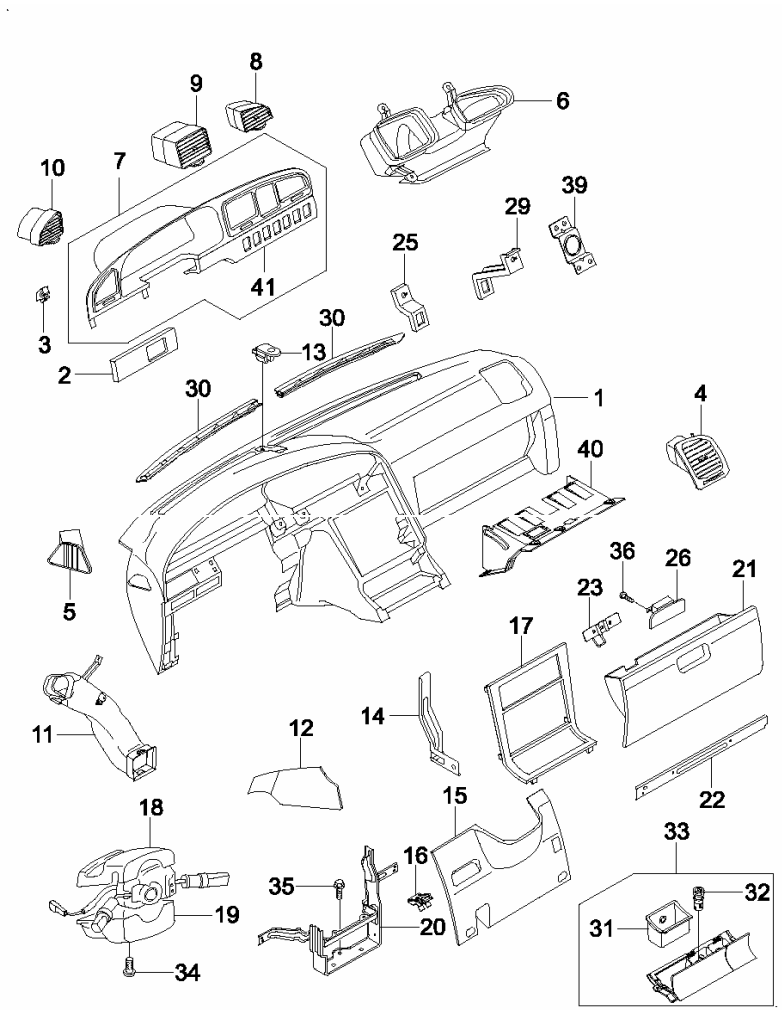

KEY NO.		PART NAME										
			ENGINE							APPLICATION		
I T C	PART NO.	T / M	G 2 3 D	G 3 2 D			OPTION	L / R	Q ' T Y	FROM	TO	REMARK
	[41] 76556 05402		PANEL-CLUSTER LOWER S	S				R	1			

7630

CONSOLE

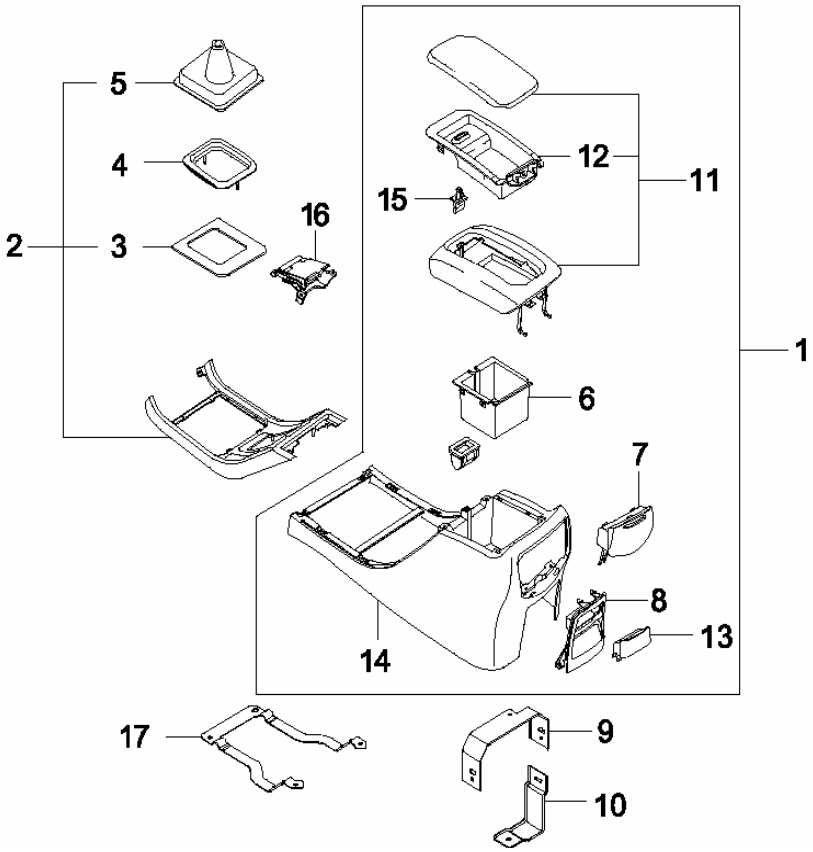

KEY NO.		PART NAME										
			ENGINE							APPLICATION		
ITC	PART NO.	T/M	G23D	G32D			OPTION	L/R	Q'TY	FROM	TO	REMARK
	[01]		CONSOLE A-COMPL									
	77900 05222		S	S			MANUAL,5SPEED		1			
	77901 05222		S	S			AUTO,4SPEED		1			
	[02]		FASCIA A-FRONT CONSOLE									
	77930 05414		S	S			MANUAL,5SPEED		1			
	77930 05814		S	S			AUTO,4SPEED		1			
	[03]		COVER-CONSOLE UPR									
	77932 05400		S	S			MANUAL,5SPEED		1			
	77932 05800		S	S			AUTO,4SPEED		1			
	[04]		COVER-A/T INDICATOR									
	77925 05411		S	S					1			
	[05]		BOOT A-FRONT CONSOLE,M/T(SEMI)									
	77935 05402		S	S					1			
	[06]		TRAY-CONSOLE									
	77952 05404		S	S					1			
	[07]		BLANKING COVER-REAR CUP HOLDER									
	77975 05402		S	S					1			
	[08]		FACIA-CONSOLE,REAR									
	77915 05402		S	S					1			

7630

CONSOLE

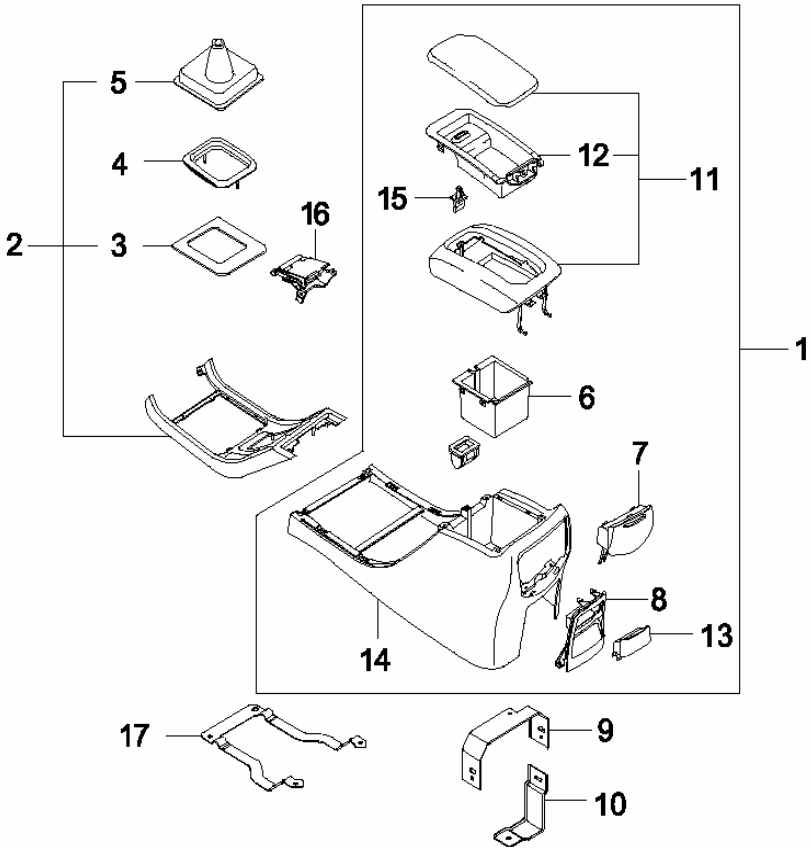

KEY NO.		PART NAME										
			ENGINE							APPLICATION		
ITC	PART NO.	T/M	G23D	G32D			OPTION	L/R	Q'TY	FROM	TO	REMARK
	[09]		BRKT A-CONSOLE REAR UPPER MTG									
	77962 05402		S	S					1			
	[10]		BRKT A-CONSOLE REAR LOWER									
	77913 05401		S	S				L	1			
	77923 05401		S	S				R	1			
	[11]		ARM REST A-CONSOLE									
	77911 05401		S	S					1			
	[12]		TRAY-2ND ARM REST									
	77769 05405		S	S					1			
	[13]		ASH TRAY A-CONSOLE,REAR									
	77950 05401		S	S					1			
	[14]		CONSOLE-MAIN									
	77910 05405		S	S					1			
	[15]		LATCH-ARM REST MAIN									
	77714 05410		S	S					1			
	[16]		CUP HOLDER A-CONSOLE,FRONT									
	77960 05404		S	S					1			
	[17]		BRKT A-CONSOLE,FRONT									
	77902 05402		S	S					1			

7720

FRONT FLOOR CARPET

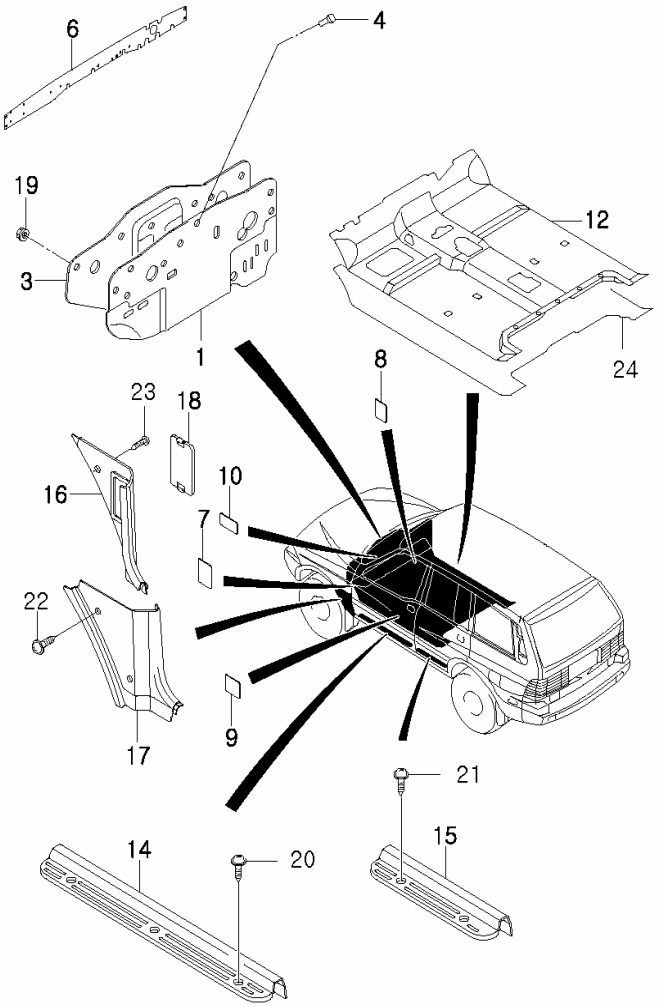

KEY NO.		PART NAME										
ITC	PART NO.	T/M	ENGINE G23D	ENGINE G32D	ENGINE	ENGINE	OPTION	L/R	Q'TY	APPLICATION FROM	APPLICATION TO	REMARK
	[01] 77110 05105		S	S					1			
	[03] 77141 05131		S	S					1			
	[04] 77118 06000		S	S					8			
	[06] R101A-0034		S	S					1			
	[07] 77146 05000		S	S					1			
	[08] 77147 05000		S	S					2			
	[09] 77148 05000		S	S					2			
	[10] 77149 05000		S	S					2			
	[12] 77210 05323		S	S					1			

[01] INSULATOR A-DASH INNER

[03] INSULATOR-ENGINE ROOM

[04] CAP NUT-FLANGE M5

[06] INSULATOR A-ENGINE ROOM UPPER

[07] PAD-COWL SIDE TRIM

[08] PAD-`A' PILLAR TRIM NO.1

[09] PAD-`B' PILLAR LOWER TRIM

[10] PAD-`A' PILLAR TRIM NO.2

[12] MAT A-FRONT FLOOR

7720

FRONT FLOOR CARPET

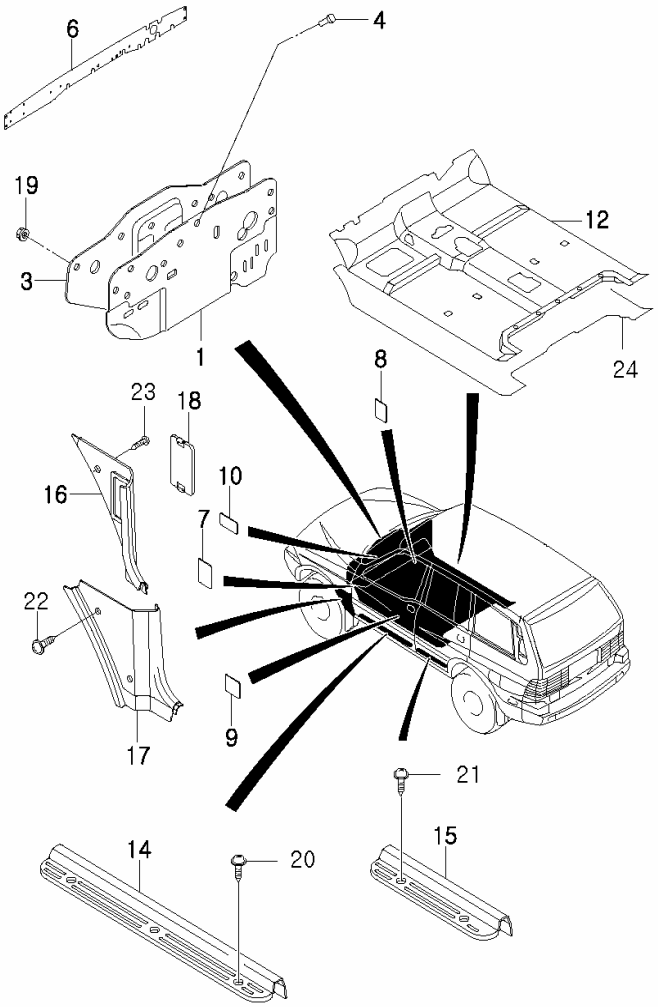

KEY NO.		PART NAME										
			ENGINE						APPLICATION		
ITC	PART NO.	T/M	G23D	G32D			OPTION	L/R	Q'TY	FROM	TO	REMARK
	[14]		TRIM A-DOOR SCUFF FRONT									
	77260 05005		S	S				L	1			
	77270 05005		S	S				R	1			
	[15]		TRIM A-DOOR SCUFF REAR									
	77265 05002		S	S				L	1			
	77275 05002		S	S				R	1			
	[16]		TRIM A-COWL SIDE									
	77280 05000		S	S				L	1			
	[17]		TRIM-COWL SIDE									
	77290 05400		S	S				R	1			
	[18]		COVER A-FUSE BOX									
	77285 05115		S	S					1			
	[19]		CAP NUT-FLANGE									
	77119 06000		S	S					4			M6
	[20]		TAP'G SCREW-TRUSS									
	93804 6016D		S	S					6			M6 X 16
	[21]		TAP'G SCREW-TRUSS									
	93804 6016D		S	S					4			M6 X 16
	[22]		DRILLING SCREW-DOOR SCUFF									
	78359 03011		S	S					2			

7720

FRONT FLOOR CARPET

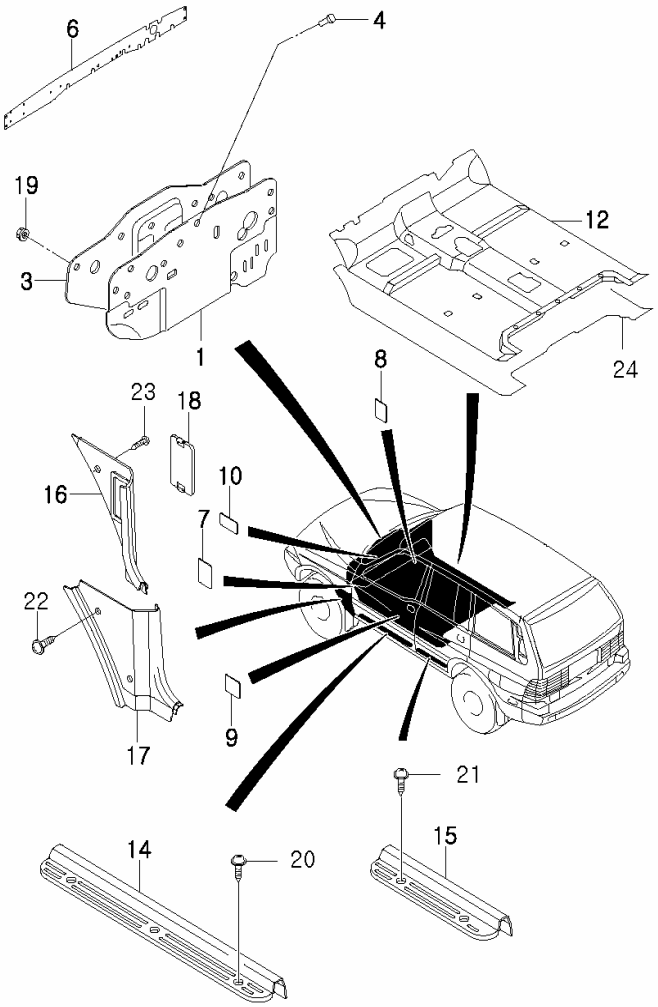

KEY NO.		PART NAME										
ITC	PART NO.	T/M	ENGINE G23D	ENGINE G32D	ENGINE	ENGINE	OPTION	L/R	Q'TY	APPLICATION FROM	APPLICATION TO	REMARK
	[23] 78359 03011		DRILLING SCREW-DOOR SCUFF									
			S	S					2			
	[24] 77230 05022		INSULATOR A-FRONT FLOOR									
			S	S					1			

7730

PILLAR TRIM

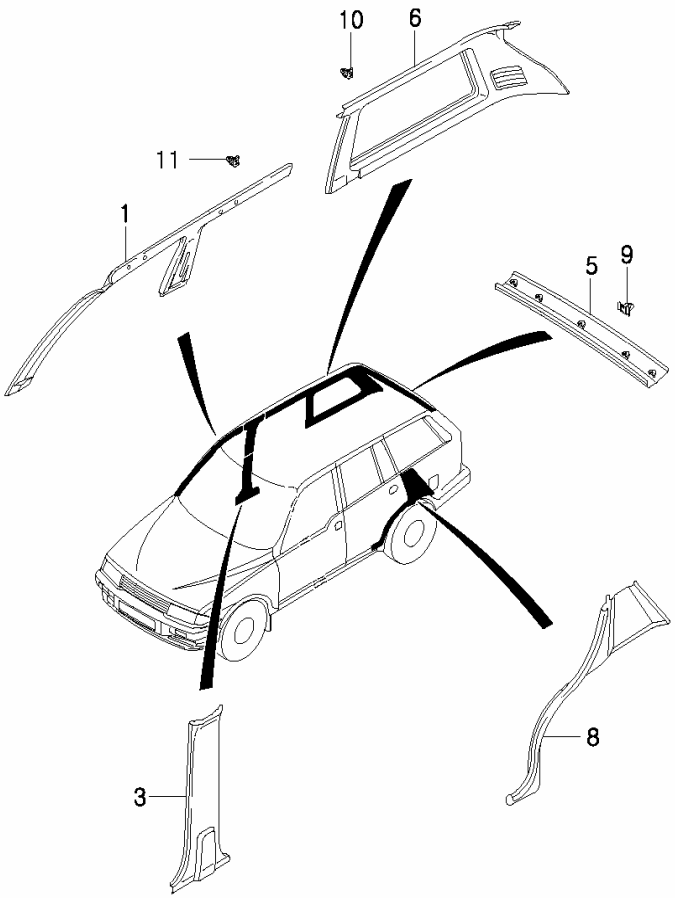

KEY NO.		PART NAME										
ITC	PART NO.	T/M	ENGINE G23D	ENGINE G32D	ENGINE	ENGINE	OPTION	L/R	Q'TY	APPLICATION FROM	APPLICATION TO	REMARK
	[01]		TRIM A-"A" PILLAR									
	77301 05003		S	S				L	1			
	77302 05003		S	S				R	1			
	[03]		TRIM A-"B" PILLAR LOWER									
	77335 05001		S	S				L	1			
	77345 05001		S	S				R	1			
	[05]		TRIM A-ROOF REAR									
	77390 05003		S	S					1			
	[06]		TRIM A-QTR UPPER									
	77350 0500A		S	S				L	1			
	77360 05005		S	S				R	1			
	[08]		TRIM A-TRUNK SIDE FRONT									
	77480 05005		S	S				L	1			
	77490 05005		S	S				R	1			
	[09]		CLIP-TRIM									
	77681 05000		S	S					5			
	[10]		CLIP-TRIM MOUNTING									
	77681 05020		S	S				B	4			
	[11]		CLIP-TRIM MOUNTING									
	77681 05020		S	S				B	28			

7740

LUGGAGE TRIM

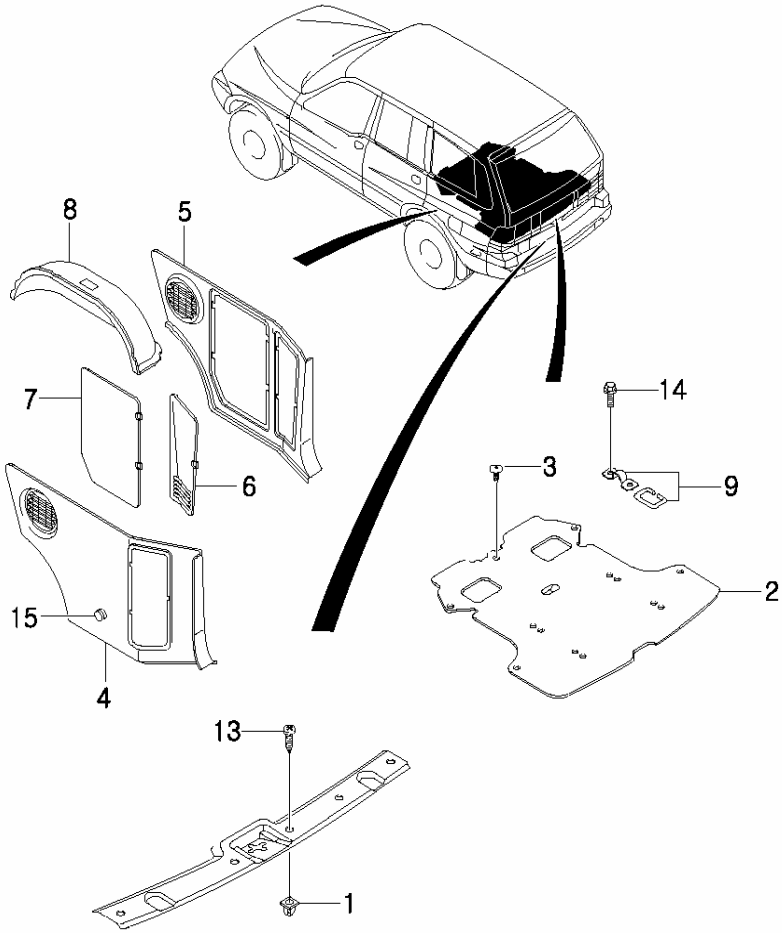

KEY NO.		PART NAME										
			ENGINE							APPLICATION		
ITC	PART NO.	T/M	G23D	G32D			OPTION	L/R	Q'TY	FROM	TO	REMARK
	[01] 76151 05000		GROMMET-SCREW S	S					6			
	[02] 76810 05108		MAT A-LOAD FLOOR S	S					1			
	[03] 76813 05000		FASTENER-TREE TYPE S	S					1			
	[04] 76830 05201		TRIM A-TRUNK SIDE RR S	S				L	1			
	[05] 76840 05003		TRIM A-TRUNK SIDE RR S	S				R	1			
	[06] 76832 05006		TRIM A-RR COMBI LAMP COVER S	S				L	1			
	76842 05005		S	S				R	1			
	[07] 76833 05003		TRIM A-RR SERVICE COVER S	S				R	1			
	[08] 77460 05020		COVER-RR WHEEL HOUSE S	S				L	1			
	77470 05021		S	S				R	1			
	[09] 76890 05010		HOOK A-LUGGAGE S	S					4			

7740

LUGGAGE TRIM

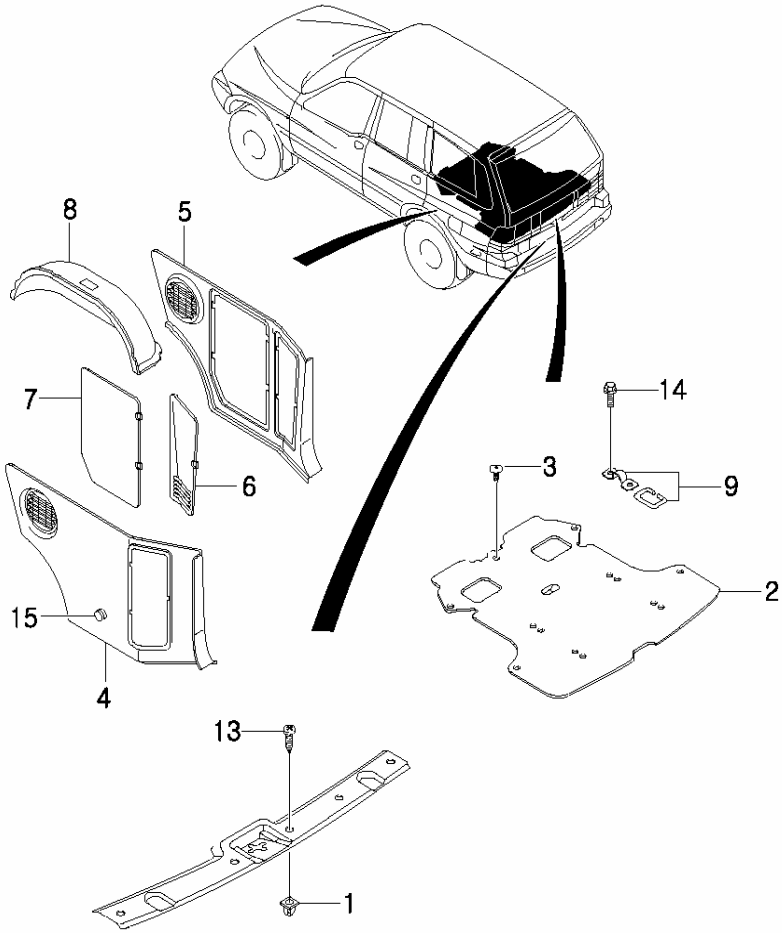

KEY NO.		PART NAME										
			ENGINE							APPLICATION		
ITC	PART NO.	T/M	G23D	G32D			OPTION	L/R	Q'TY	FROM	TO	REMARK
	[13]		TAP'G SCREW-TRUSS									
	93804 5018B		S	S					6			M5 X 18
	[14]		SCREW-PAN SEMS									
	98074 0616D		S	S					8			M6 X 1.0 X 16
	[15]		SOCKET A-POWER									
	R112M-0005		S	S					1			

7770

SUNSHADE & INSIDE MIRROR

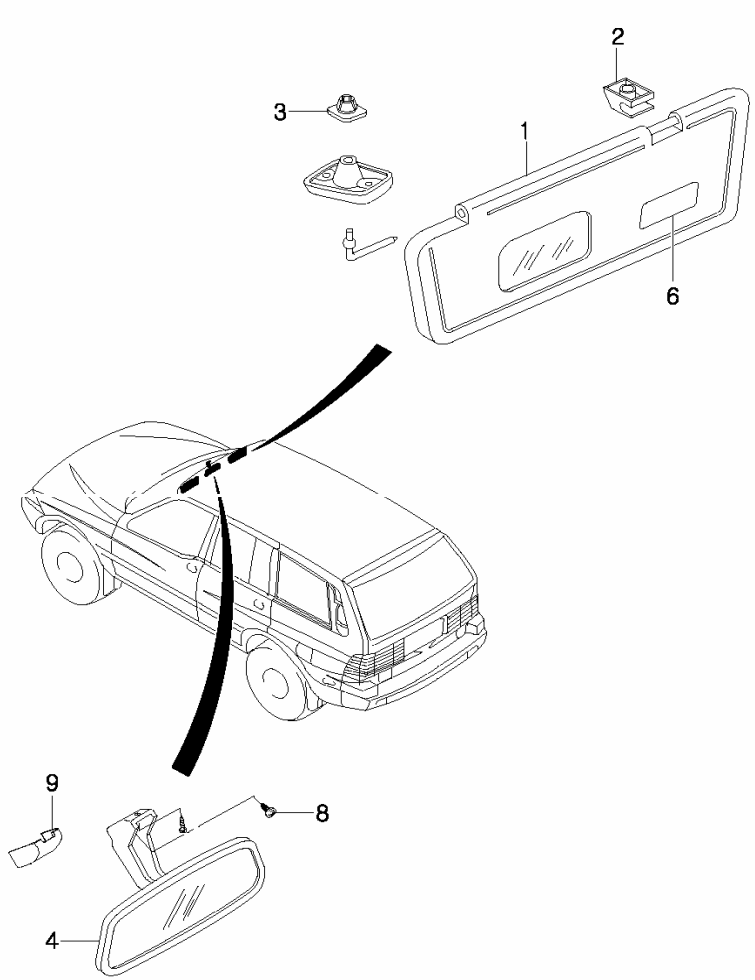

KEY NO.		PART NAME										
			ENGINE							APPLICATION		
ITC	PART NO.	T/M	G23D	G32D			OPTION	L/R	Q'TY	FROM	TO	REMARK
	[01]		SUNVISOR & PIVOT A									
	76110 05012		S	S			AIR BAG SINGLE	L	1			
	76120 05250		S	S				R	1			
	R101A-0028		S	S			-AIR BAG SINGLE	L	1			
	[02]		RETAINER-SUNVISOR									
	76142 05002		S	S				B	2			
	[03]		GROMMET-SCREW									
	76151 05000		S	S				B	2			
	[04]		MIRROR A-INSIDE RR VIEW									
	76470 05000		S	S			DAY & NIGHT		1			
	76470 05980		S	S			AUTO DIMMING		1			
	[06]		WARNING LABEL-SUNVISOR SIDE									
	46172 06500		S	S			AIR BAG SINGLE		1			
	[08]		LOCK BOLT-INSIDE RR VIEW									
	76414 06000		S	S			DAY & NIGHT		1			
	[09]		COVER-INSIDE MIRROR									
	76474 05980		S	S			AUTO DIMMING		1			

7810

WINDSHIELD WIPER

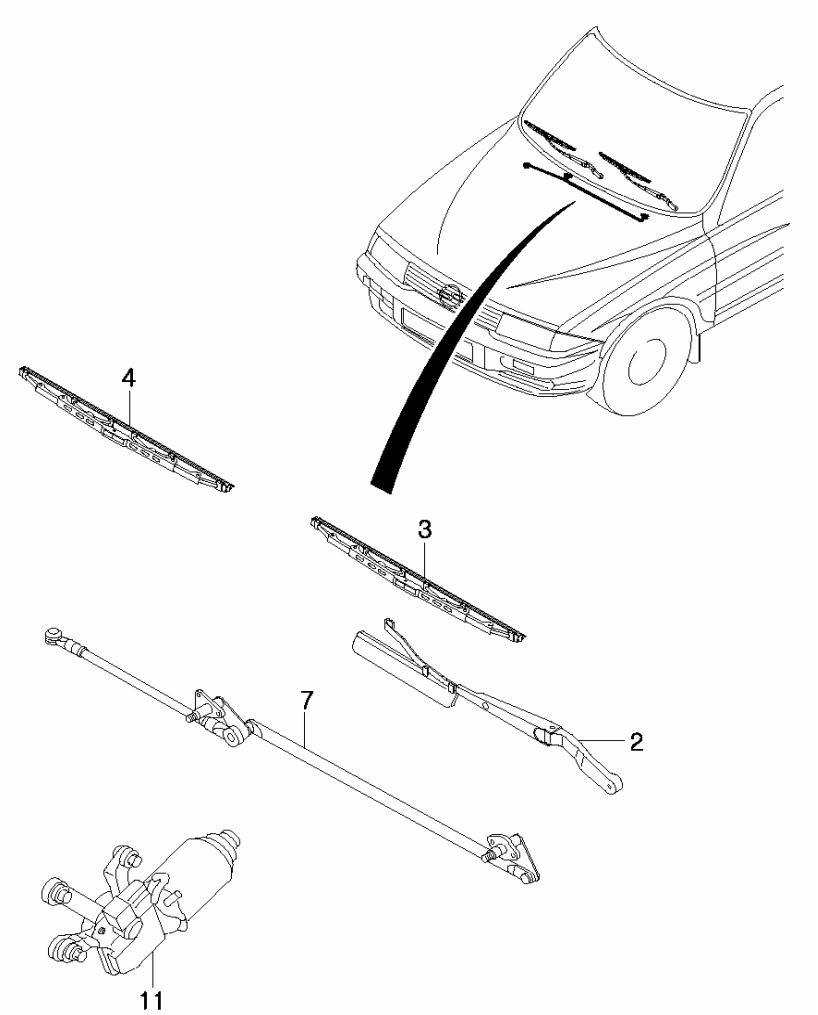

KEY NO.		PART NAME										
			ENGINE							APPLICATION		
ITC	PART NO.	T/M	G23D	G32D			OPTION	L/R	Q'TY	FROM	TO	REMARK
	[02]		ARM A-WINDSHIELD WIPER									
	78310 05000		S	S				L	1			
	78320 05000		S	S				R	1			
	[03]		BLADE A-WINDSHIELD WIPER									
	78350 05000		S	S					1			
	[04]		BLADE A-WINDSHIELD WIPER									
	78360 05000		S	S					1			
	[07]		LINKAGE A-WINDSHIELD WIPER									
	78200 05003		S	S					1			
	[11]		MOTOR A-FRT WIPER									
	86110 05073		S	S					1			

7820

WINDSHIELD WASHER

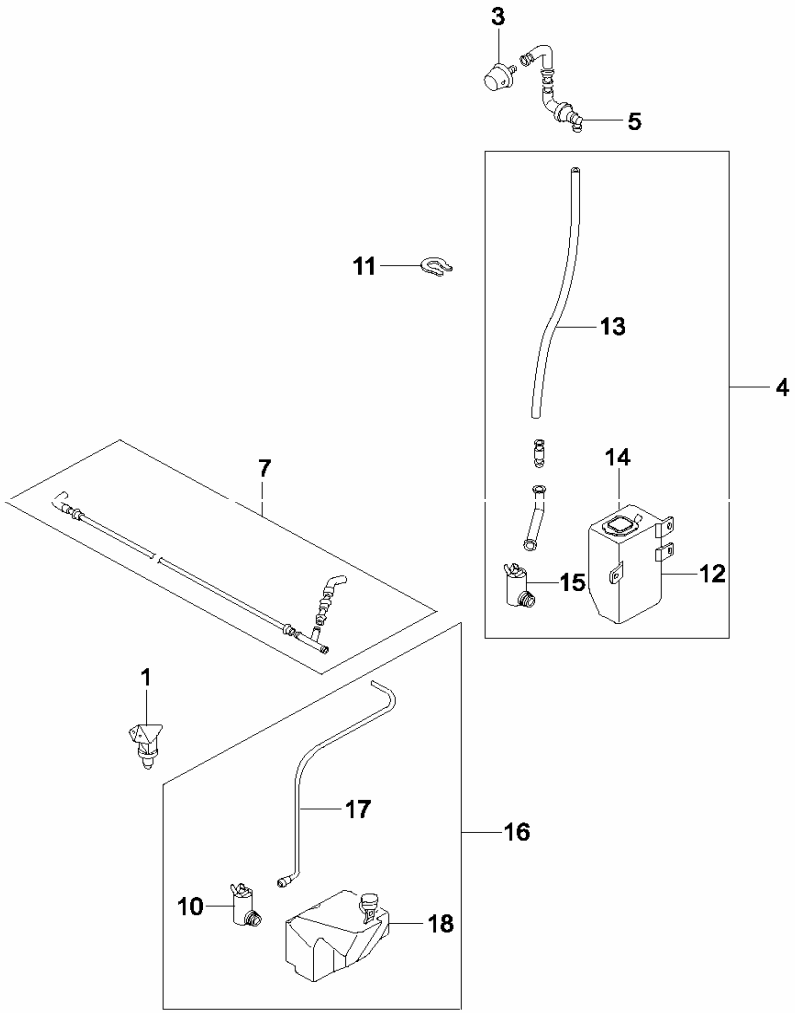

KEY NO.		PART NAME										
			ENGINE							APPLICATION		
ITC	PART NO.	T/M	G23D	G32D			OPTION	L/R	Q'TY	FROM	TO	REMARK
	[01] 78420 05010		NOZZLE A-WINDSHIELD WASHER S	S					2			
	[03] 78550 05001		NOZZLE A-RR WASHER S	S					1			
	[04] 78570 05003		TANK A-WINDSHIELD WASHER RESERVIOR S	S					1			
	[05] 78580 05003		GROMMET A-RR WASHER ROOF RAIL S	S					1			
	[07] 78481 05002		HOSE-WINDSHIELD WASHER S	S					1			
	[10] 86320 05000		MOTOR A-WINDSHIELD WASHER S	S					1			
	[11] 71628 05000		CLIP-FUEL FILLER DR RELEASE CABLE S	S					2			
	[12] 78571 05000		TANK-RR WASHER RESERVIOR S	S					1			
	[13] 78573 05000		HOSE-RR WASHER S	S					1			

7820

WINDSHIELD WASHER

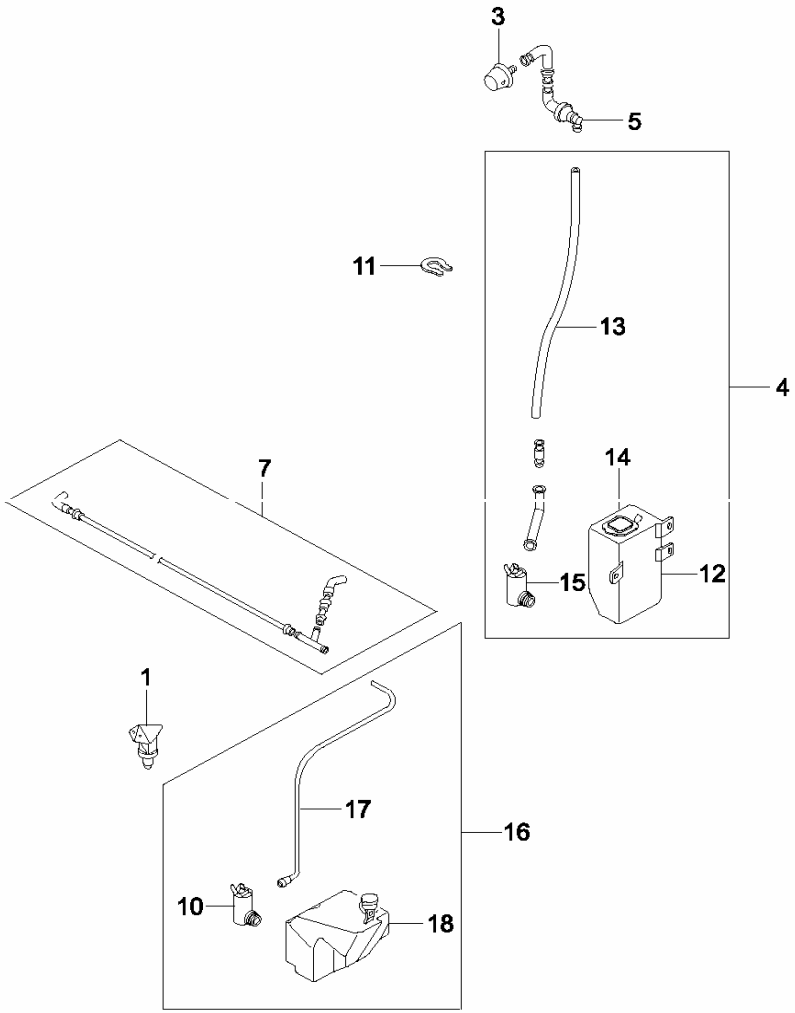

KEY NO.		PART NAME										
			ENGINE							APPLICATION		
ITC	PART NO.	T/M	G23D	G32D			OPTION	L/R	Q'TY	FROM	TO	REMARK
	[14] CAP-RR WASHER TANK											
	78574 05000		S	S					1			
	[15] WASHER MOTOR A-W/SHLD											
	86320 05000		S	S					1			
	[16] TANK A-WINDSHIELD WASHER RESERVIOR											
	78480 05011		S	S					1			
	[17] HOSE-WINDSHIELD WASHER											
	78426 05000		S	S					1			
	[18] RESERVIOR TANK-WINDSHIELD											
	78422 05011		S	S					1			

7830

REAR WINDOW WIPER

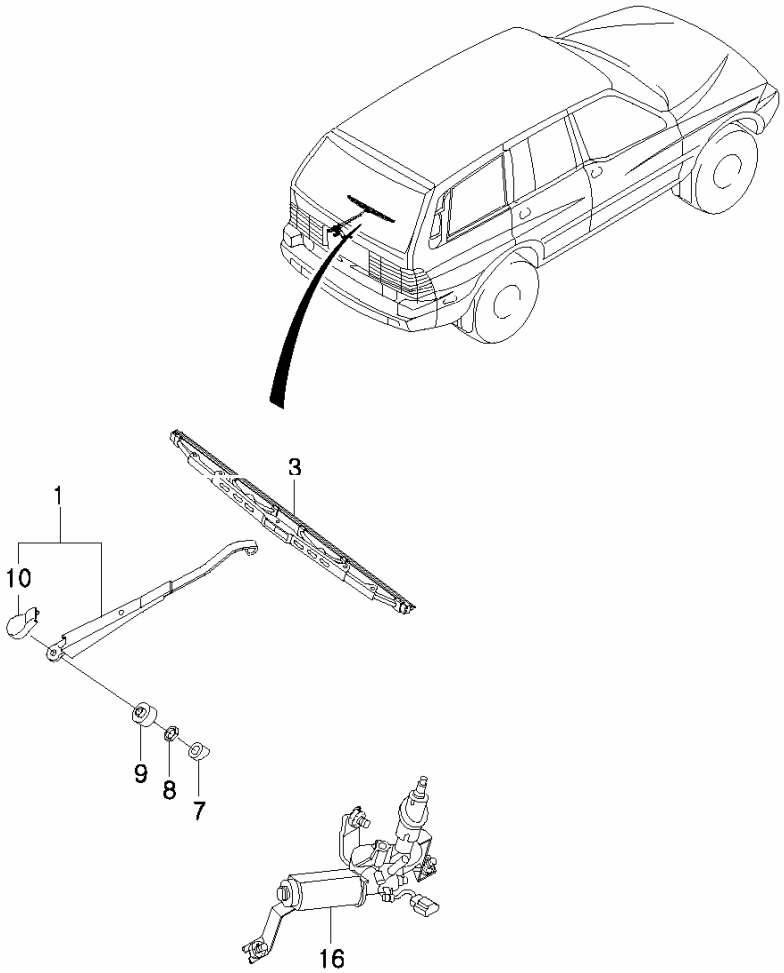

KEY NO.		PART NAME										
			ENGINE							APPLICATION		
ITC	PART NO.	T/M	G23D	G32D			OPTION	L/R	Q'TY	FROM	TO	REMARK
	[01] 78510 05000		ARM A-RR WIPER S	S					1			
	[03] 78520 05001		BLADE A-RR WIPER S	S					1			
	[07] 78514 05000		CAP-RR WIPER S	S					1			
	[08] 78515 05000		NUT-RR WIPER CAP MTG S	S					1			
	[09] 78530 05000		COVER-RR WIPER CAP S	S					1			
	[10] 78516 05000		CAP-RR WIPER ARM S	S					1			
	[16] 86150 05010		MOTOR A-RR WIPER S	S					1			

7840

GLASS

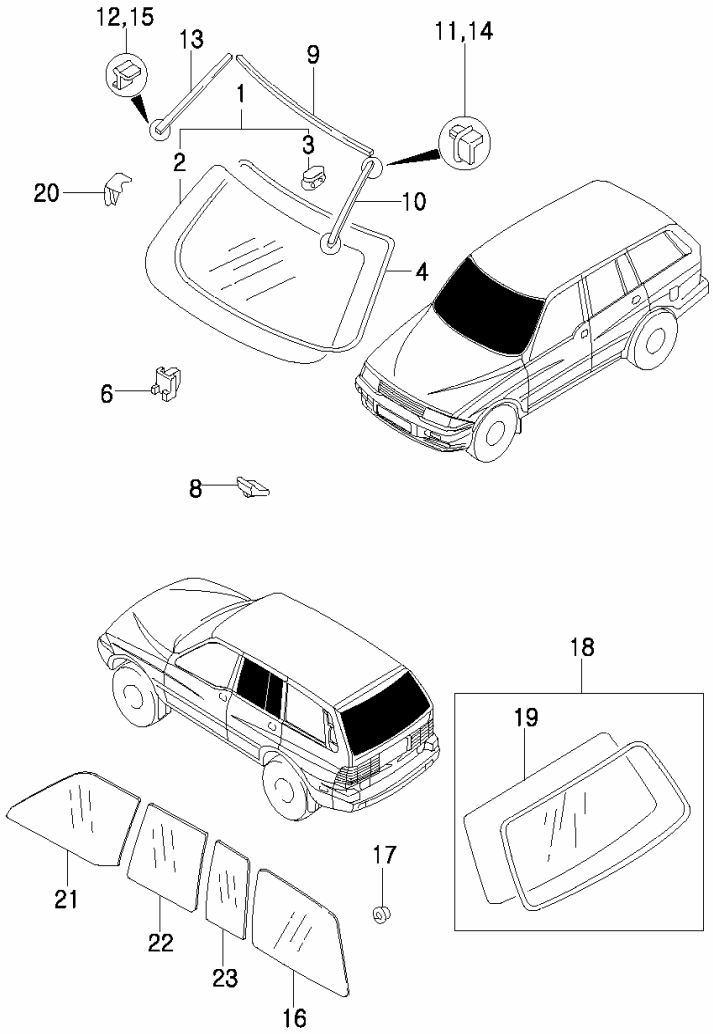

KEY NO.		PART NAME										
			ENGINE							APPLICATION		
ITC	PART NO.	T/M	G23D	G32D			OPTION	L/R	Q'TY	FROM	TO	REMARK
	[01]		GLASS A-WINDSHIELD,TINTED									
	79110 05321		S	S			DAY & NIGHT - RAIN SENSOR		1			
	79110 05311		S	S			RAIN SENSOR AUTO DIMMING		1			
	79110 05331		S	S			AUTO DIMMING - RAIN SENSOR		1			
	R101E-0014		S	S			RAIN SENSOR DAY & NIGHT		1			
	[02]		GLASS-WINDSHIELD,TINTED,ANTENNA									
	79111 05301		S	S					1			
	[03]		PLATE-INSIDE RR VIEW MIRROR BASE									
	76422 05001		S	S			DAY & NIGHT - RAIN SENSOR		1			
	76422 05800		S	S			AUTO DIMMING		1			
	[04]		DAM-WINDSHIELD UPR									
	79112 05000		S	S					1			
	[06]		SPACER A-WINDSHIELD,LWR1									
	79127 05000		S	S					2			
	[08]		SPACER A-WINDSHIELD,LWR									
	79120 05001		S	S					2			

7840

GLASS

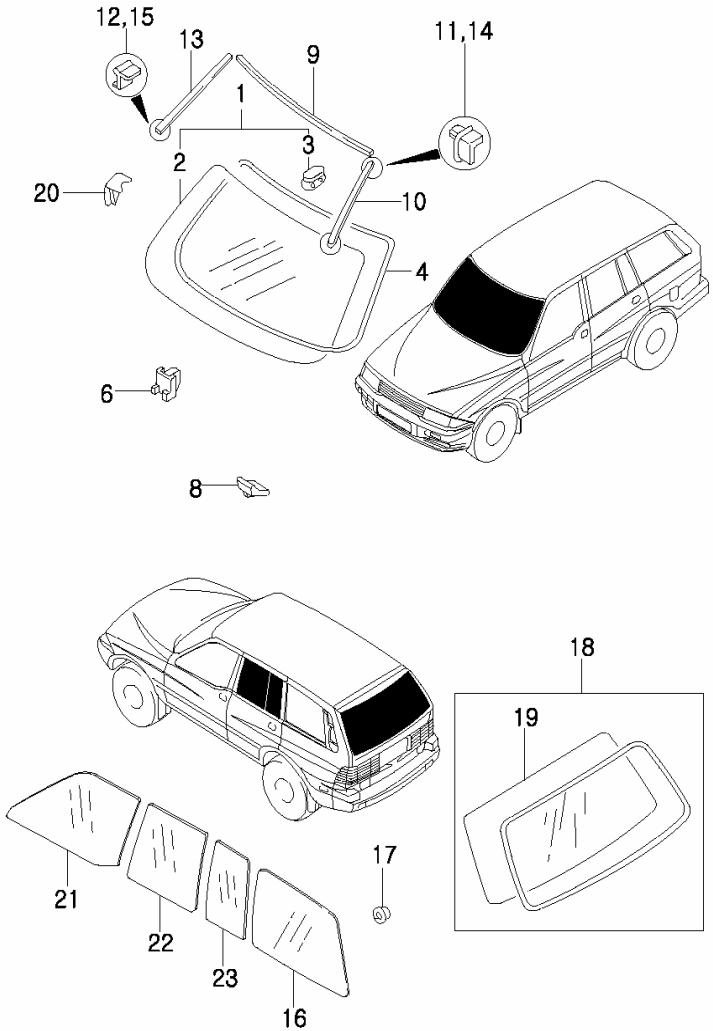

KEY NO.		PART NAME										
			ENGINE							APPLICATION		
ITC	PART NO.	T/M	G23D	G32D			OPTION	L/R	Q'TY	FROM	TO	REMARK
	[09]		MLDG-WINDSHIELD UPR									
	79122 05000		S	S					1			
	[10]		MLDG A-WINDSHIELD SIDE,LH									
	79132 05002		S	S				L	1			
	[11]		CAP-WINDSHIELD SIDE MLDG END UPR									
	79134 05000		S	S				L	1			
	[12]		CAP-WINDSHIELD SIDE MLDG END LWR									
	79135 05000		S	S				L	1			
	[13]		MLDG A-WINDSHIELD SIDE,RH									
	79142 05002		S	S				R	1			
	[14]		CAP-WINDSHIELD SIDE MLDG END UPR									
	79144 05000		S	S				R	1			
	[15]		CAP-WINDSHIELD SIDE MLDG END LWR									
	79145 05000		S	S				R	1			
	[16]		GLASS A-SIDE TINTED									
	79230 05012		S	S				L	1			
	79240 05012		S	S				R	1			
	[17]		NUT-SIDE GLASS MTG									
	79251 05000		S	S				B	8			

7840

GLASS

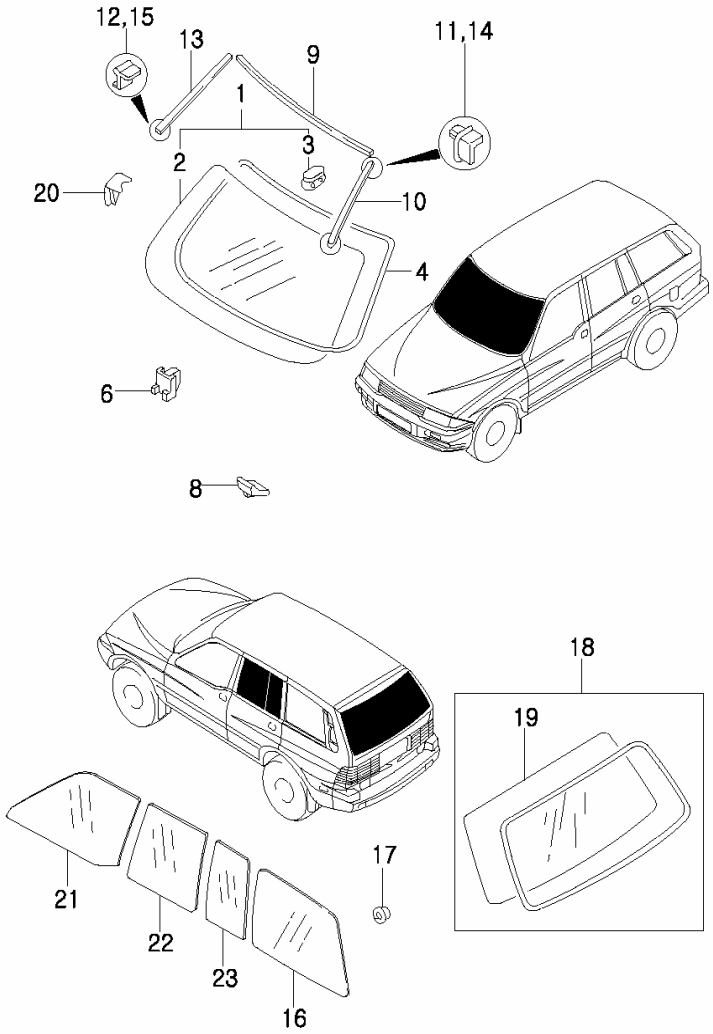

KEY NO.		PART NAME										
			ENGINE							APPLICATION		
ITC	PART NO.	T/M	G23D	G32D			OPTION	L/R	Q'TY	FROM	TO	REMARK
	[18]		GLASS A-TAIL GATE TINTED									
	79320 05014		S	S					1			
	[19]		GLASS-TAIL GATE TINTED									
	79311 05012		S	S					1			
	[20]		CLIP-WINDSHIELD SIDE									
	79136 05001		S	S				B	6			
	[21]		GLASS-FRT DR DROP(TINTED)									
	72311 05103		S	S				L	1			
	72321 05103		S	S				R	1			
	[22]		GLASS-RR DR DROP(TINTED)									
	73311 05103		S	S				L	1			
	73321 05103		S	S				R	1			
	[23]		GLASS-RR DR FIXED(TINTED)									
	73317 05103		S	S				L	1			
	73327 05103		S	S				R	1			

7850

OUTSIDE MIRROR

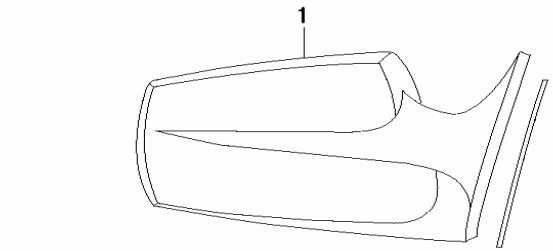

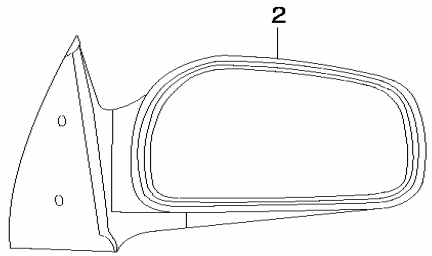

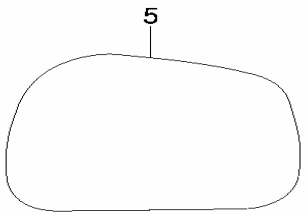

KEY NO.		PART NAME										
			ENGINE							APPLICATION		
ITC	PART NO.	T/M	G23D	G32D			OPTION	L/R	Q'TY	FROM	TO	REMARK
	[01]		MIRROR A-OUTSIDE RR VIEW									
	78980 05061		S	S			BODY COLOR BASE	L	1			
	[02]		MIRROR A-OUTSIDE RR VIEW									
	78990 05061		S	S			BODY COLOR BASE	R	1			
	[05]		HOLDER A-GLASS									
	78985 05010		S	S			BODY COLOR BASE	L	1			
	78995 05010		S	S			BODY COLOR BASE	R	1			

7870

FRONT BUMPER

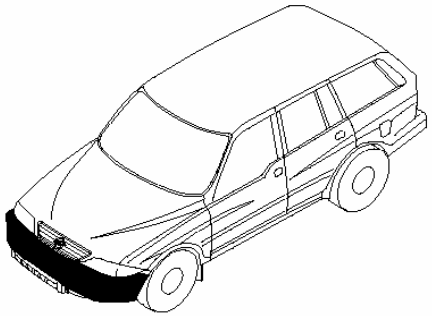

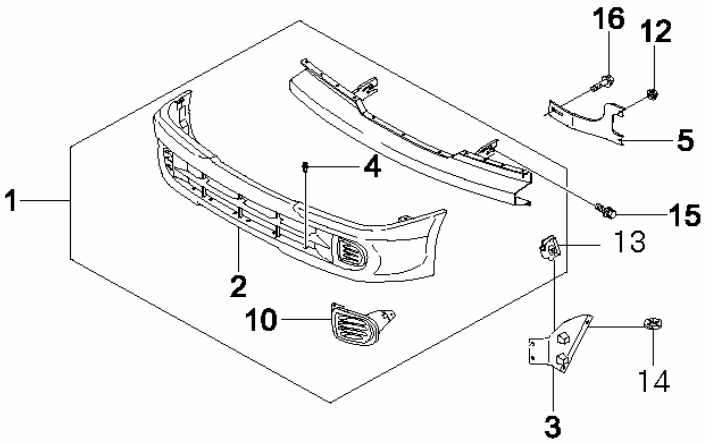

KEY NO.		PART NAME										
			ENGINE							APPLICATION		
ITC	PART NO.	T/M	G23D	G32D			OPTION	L/R	Q'TY	FROM	TO	REMARK
	[01]		BUMPER A-FRONT									
	78710 05801		S	S			FOG LAMP		1			
	78710 05123		S	S			FOG LAMP		1			
	[02]		FASCIA A-FRONT BUMPER									
	78711 05801		S	S					1			
	[03]		BRKT A-FRONT BUMPER SIDE MTG									
	78722 05800		S	S				L	1			
	78723 05800		S	S				R	1			
	[04]		SCRIVET									
	79416 05000		S	S					26			
	[05]		BRKT-FRONT BUMPER SIDE SUPPORT									
	78761 05800		S	S				L	1			
	78762 05800		S	S				R	1			
	[10]		LAMP A-FRT FOG									
	83201 05502		S	S				L	1			
	83202 05502		S	S				R	1			
	[12]		NUT-CON WASHER									
	93074 06001		S	S				B	4			M6 X 1.0
	[13]		NUT-SPRING									
	R114A-0009		S	S				B	2			M4

7870

FRONT BUMPER

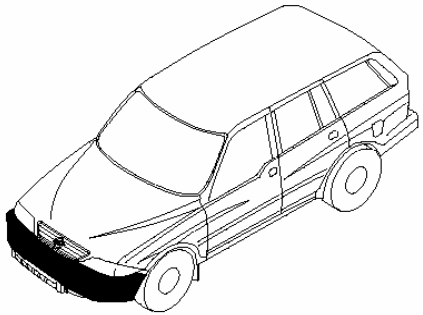

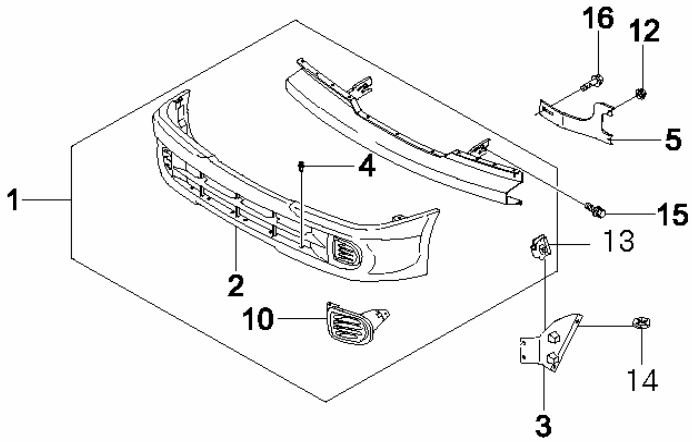

KEY NO.		PART NAME										
ITC	PART NO.	T/M	ENGINE G23D	ENGINE G32D	ENGINE	ENGINE	OPTION	L/R	Q'TY	APPLICATION FROM	APPLICATION TO	REMARK
	[14] 78726 05000		NUT-FRONT BUMPER B/BEAM SPIRE`A' S	S				B	4			
	[15] 78708 05002		BOLT-HEXAGON SEMS S	S					4			M16 X 30
	[16] R114A-0011		BOLT-HEXAGON SEMS S	S					4			M6 X 1.0 X 20

7880

REAR BUMPER

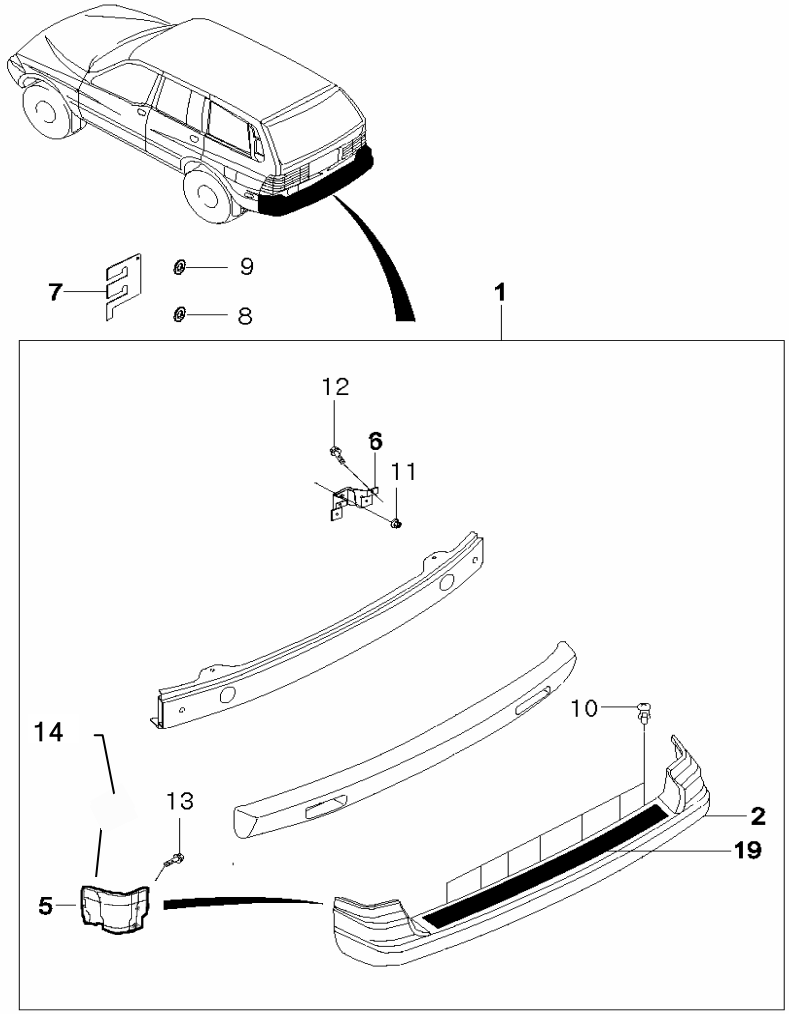

KEY NO.		PART NAME										
			ENGINE							APPLICATION		
ITC	PART NO.	T/M	G23D	G32D			OPTION	L/R	Q'TY	FROM	TO	REMARK
	[01]		BUMPER A-REAR									
	78810 05801		S	S					1			
	[02]		FASCIA-REAR BUMPER									
	78811 05800		S	S					1			
	[05]		BRKT-REAR BUMPER SIDE MOUNTING									
	78836 05800		S	S				L	1			
	78837 05800		S	S				R	1			
	[06]		BRKT-REAR BUMPER MOUNTING									
	78834 05800		S	S				L	1			
	78835 05800		S	S				R	1			
	[07]		SPACER-REAR BUMPER.NO3									
	78862 05010		S	S					A			
	[08]		SPACER 'B'-REAR BUMPER									
	78845 05000		S	S					A			
	[09]		SPACER 'A'-REAR BUMPER									
	78844 05000		S	S					A			
	[10]		SCRIVET									
	79416 05000		S	S					20			
	78872 05010		S	S					16			SV120

7880

REAR BUMPER

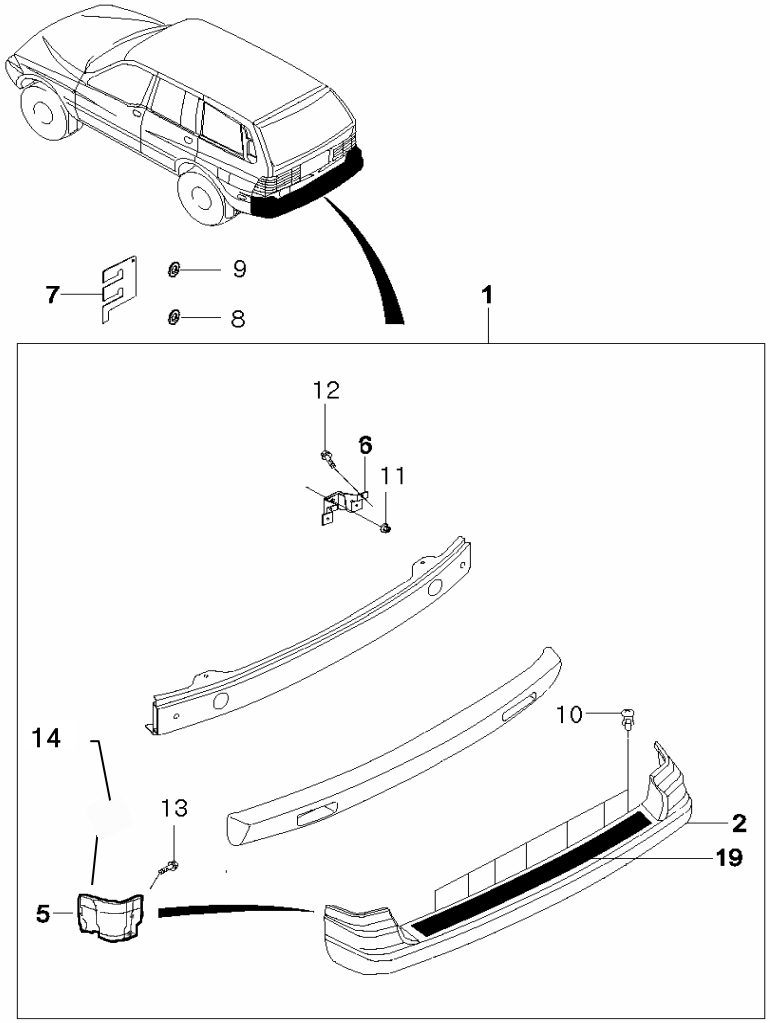

KEY NO.		PART NAME										
			ENGINE							APPLICATION		
ITC	PART NO.	T/M	G23D	G32D			OPTION	L/R	Q'TY	FROM	TO	REMARK
	[11] 78855 05000		NUT-HEXAGON W/CONICAL WASHER S	S					4			
	[12] R114A-0016		HEXAGON BOLT S	S					8			M8 X 20
	[13] R114A-0016		HEXAGON BOLT S	S					4			
	[14] 94201 40640		RIVET-BLIND S	S					6			M4
	[19] 78881 05002		STEP-REAR BUMPER S	S					1			

7910

RADIATOR GRILLE

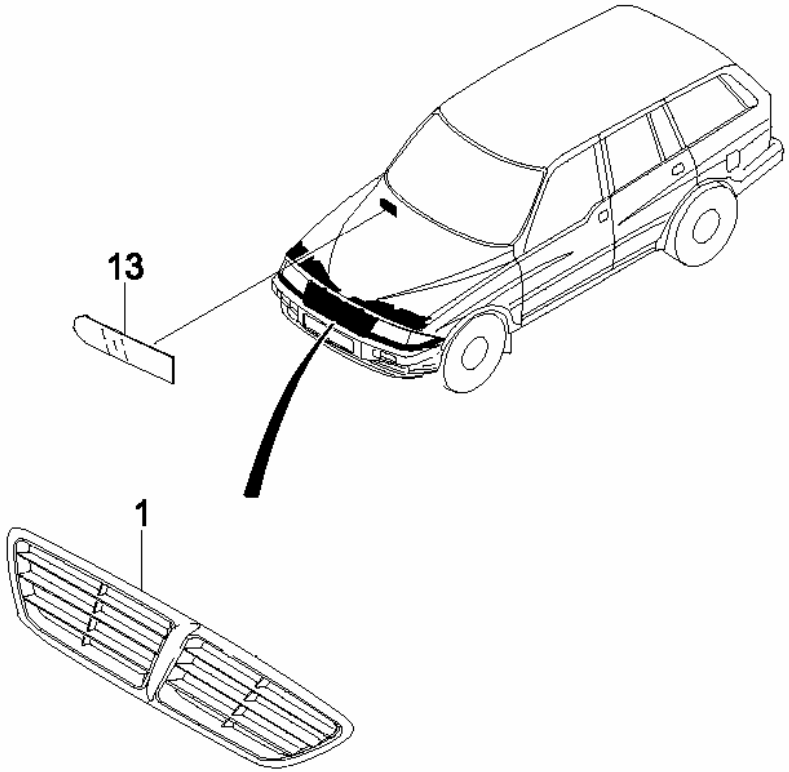

KEY NO.		PART NAME										
			ENGINE							APPLICATION		
ITC	PART NO.	T/M	G23D	G32D			OPTION	L/R	Q'TY	FROM	TO	REMARK
	[1] 79430 07010		GRILLE A-RADIATOR S	S					1			
	[13] 79452 05001		FILM-WATER PROTECTOR S	S					1			

7920

MUD GUARD

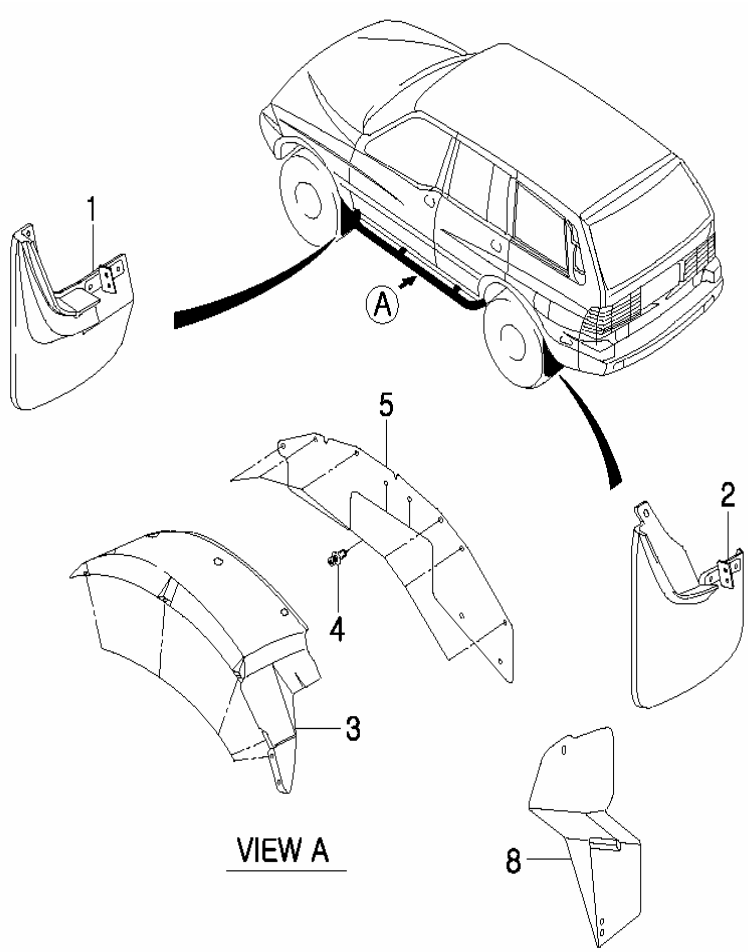

KEY NO.		PART NAME										
			ENGINE							APPLICATION		
ITC	PART NO.	T/M	G23D	G32D			OPTION	L/R	Q'TY	FROM	TO	REMARK
	[01]		M/GUARD A-FRT									
	79710 05800		S	S				L	1			
	79720 05800		S	S				R	1			
	[02]		M/GUARD A-RR									
	79730 05800		S	S				L	1			
	79740 05800		S	S				R	1			
	[03]		WHEEL GUARD									
	79716 05002		S	S				L	1			
	79726 05002		S	S				R	1			
	[04]		SCRIVET									
	79717 05000		S	S				B	24			
	[05]		SPLASH GUARD									
	79736 05003		S	S				B	2			
	[08]		RR WHEEL GUARD									
	79756 05002		S	S				L	1			
	79766 05002		S	S				R	1			

7930

SIDE BODY MOULDING

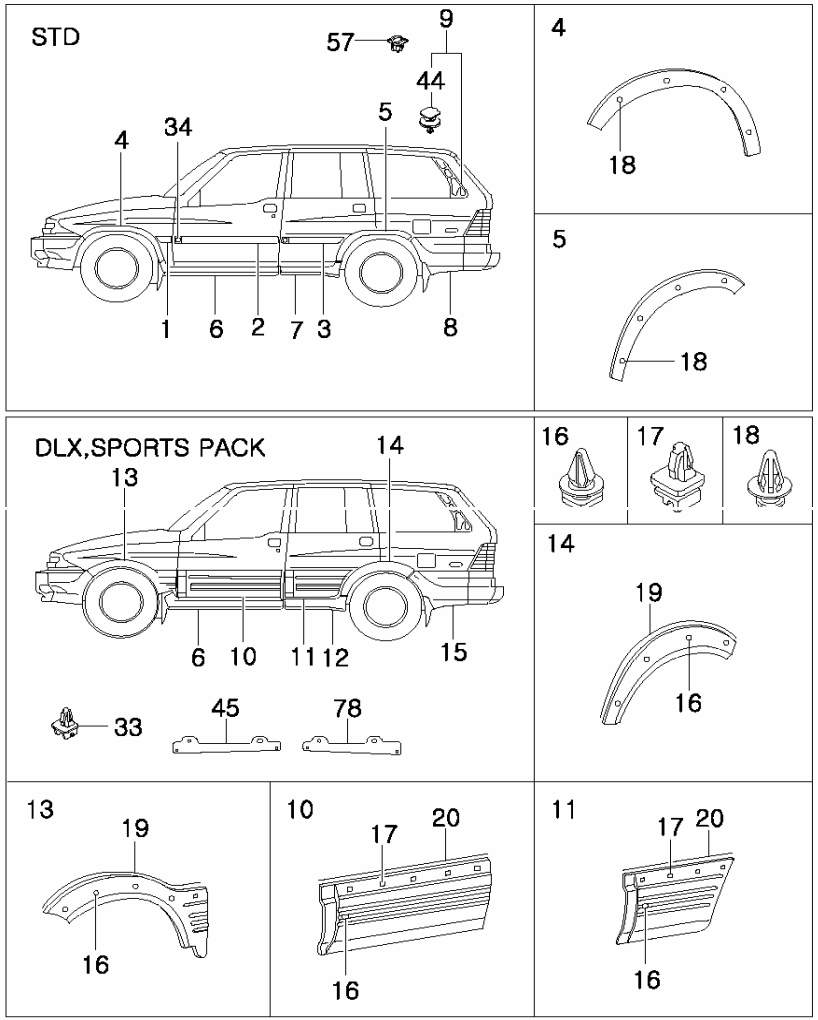

KEY NO.		PART NAME										
			ENGINE							APPLICATION		
I T C	PART NO.	T / M	G 2 3 D	G 3 2 D			OPTION	L / R	Q ' T Y	FROM	TO	REMARK
	[01]		GARNISH A-FNDR									
	79511 05800		S	S			NARROW	L	1			
	79521 05800		S	S			NARROW	R	1			
	[02]		GARNISH A-FRT DR									
	79516 05800		S	S			NARROW	L	1			
	79526 05800		S	S			NARROW	R	1			
	[03]		GARNISH A-RR DR									
	79536 05800		S	S			NARROW	L	1			
	79546 05800		S	S			NARROW	R	1			
	[04]		GARNISH A-FRT WHEEL ARCH									
	79531 05800		S	S			NARROW	L	1			
	79541 05800		S	S			NARROW	R	1			
	[05]		GARNISH A-RR WEEL ARCH									
	79551 05800		S	S				L	1			
	79561 05800		S	S				R	1			
	[06]		GARNISH A-FRT SIDE SILL									
	79556 05801		S	S				L	1			
	79566 05801		S	S				R	1			
	[07]		GARNISH A-RR SIDE SILL									
	79576 05800		S	S				L	1			
	79586 05800		S	S				R	1			

7930

SIDE BODY MOULDING

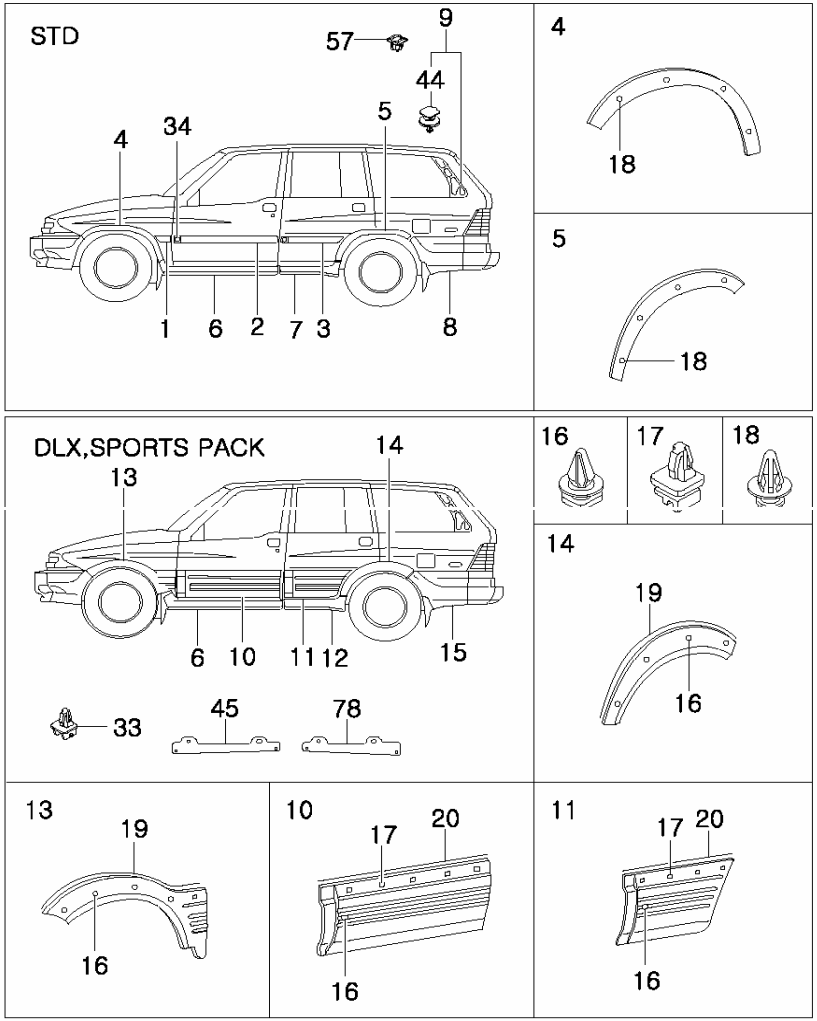

KEY NO.		PART NAME										
			ENGINE							APPLICATION		
ITC	PART NO.	T/M	G23D	G32D			OPTION	L/R	Q'TY	FROM	TO	REMARK
	[08]		GARNISH A-RR BUMPER									
	79571 05800		S	S				L	1			
	79581 05800		S	S				R	1			
	[09]		GRILLE A-AIR EXTRACTOR									
	79551 05100		S	S				L	1			
	79561 05100		S	S				R	1			
	[10]		GARNISH A-FRT DR									
	79516 05810		S	S			WIDE	L	1			
	79526 05810		S	S			WIDE	R	1			
	[11]		GARNISH A-RR DR									
	79536 05810		S	S			WIDE	L	1			
	79546 05810		S	S			WIDE	R	1			
	[13]		GARNISH A-FRT WHEEL ARCH									
	79531 05811		S	S			WIDE	L	1			
	79541 05811		S	S			WIDE	R	1			
	[14]		GARNISH A-RR WHEEL ARCH									
	79551 05800		S	S				L	1			
	79561 05800		S	S				R	1			
	[15]		GARNISH A-RR BPR									
	79571 05800		S	S				L	1			
	79581 05800		S	S				R	1			

7930

SIDE BODY MOULDING

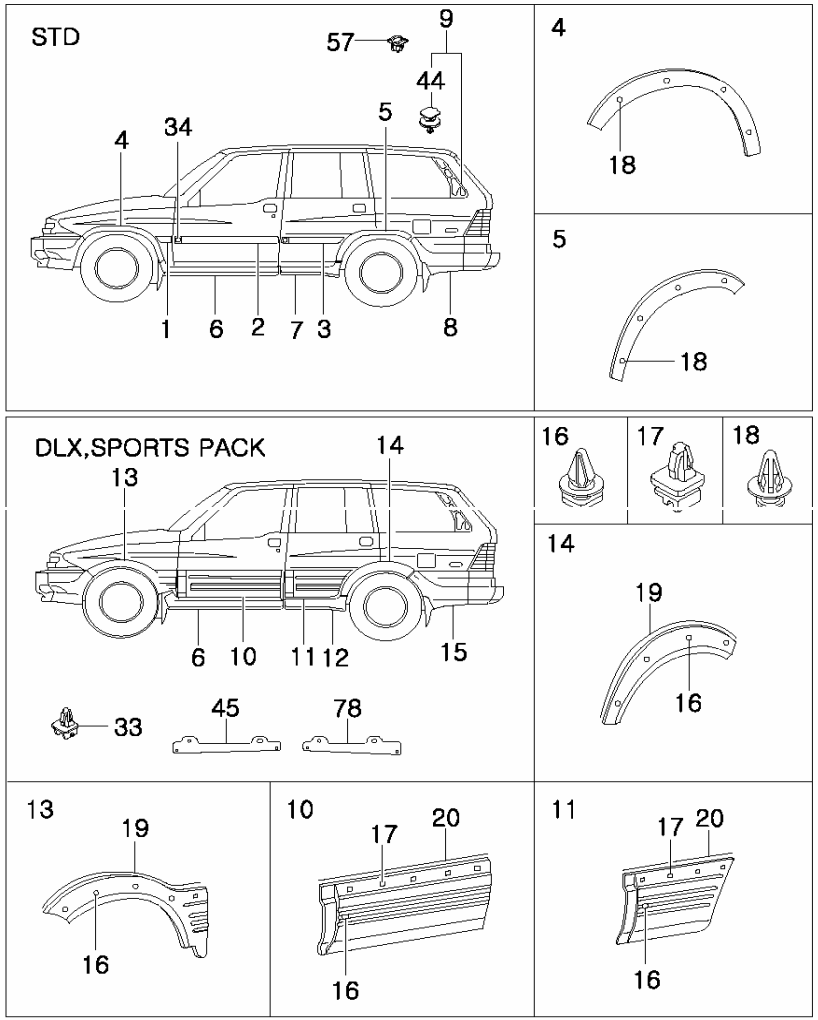

KEY NO. ITC	PART NO.	T/M	ENGINE G23D	ENGINE G32D			OPTION	L/R	Q'TY	APPLICATION FROM	APPLICATION TO	REMARK
	[16] 79568 05002		CLIP-B PLR COVER MTG S	S				B	14			DTN01
	[17] 79557 06000		CLIP-DR MLDG MTG S	S				B	10			
	[18] 79568 05002		CLIP-B PLR COVER MTG S	S			NARROW	B	14			DTN01
	[34] 79539 05800		FASTENER-D/GARNISH OPEN S	S			NARROW	B	4			FRT,RR
	[44] 79554 05000		CLIP S	S				B	6			
	[45] 79559 05800		BRKT-FRT S/SILL MTG S	S				B	2			
	[57] 79564 05001		GROMMET S	S				B	6			
	[78] 79579 05800		BRKT-RR S/SILL MTG S	S					2			

7940

REAR BODY MOULDING

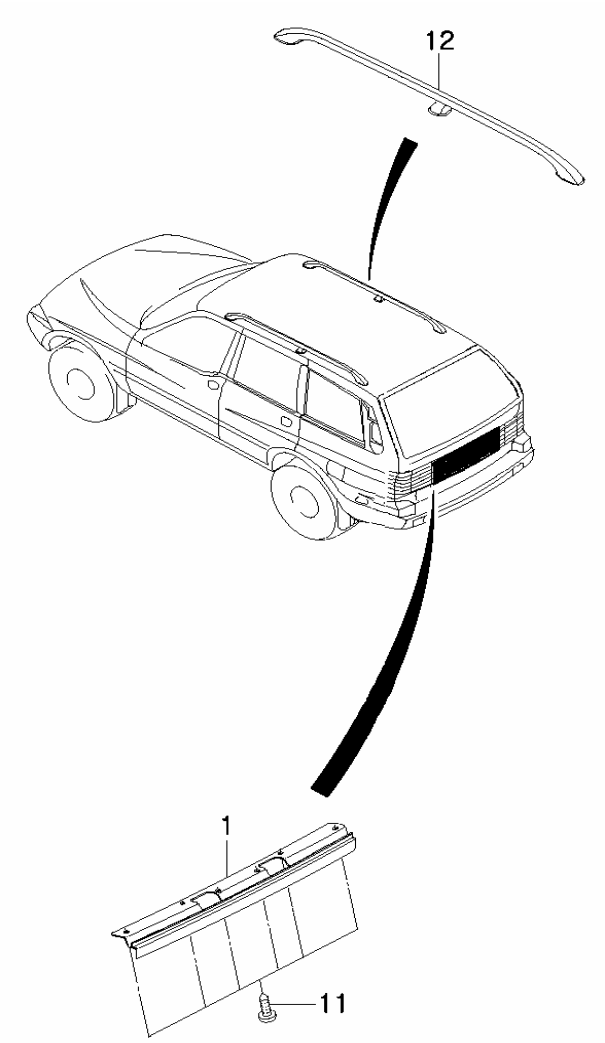

KEY NO.		PART NAME										
			ENGINE							APPLICATION		
ITC	PART NO.	T/M	G23D	G32D			OPTION	L/R	Q'TY	FROM	TO	REMARK
	[01]		GARNISH-TAIL GATE									
	79611 05801		S	S					1			
	[11]		TAP'G SCREW-PAN SEMS									
	98414 4020D		S	S					6			M4 X 20
	[12]		RACK A-ROOF									
	79610 05811		S	S				L	1			
	79620 05811		S	S				R	1			

7950

EMBLEM & LETTERING

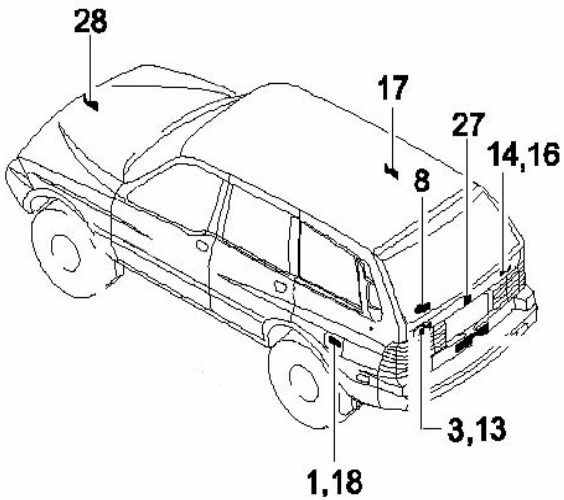

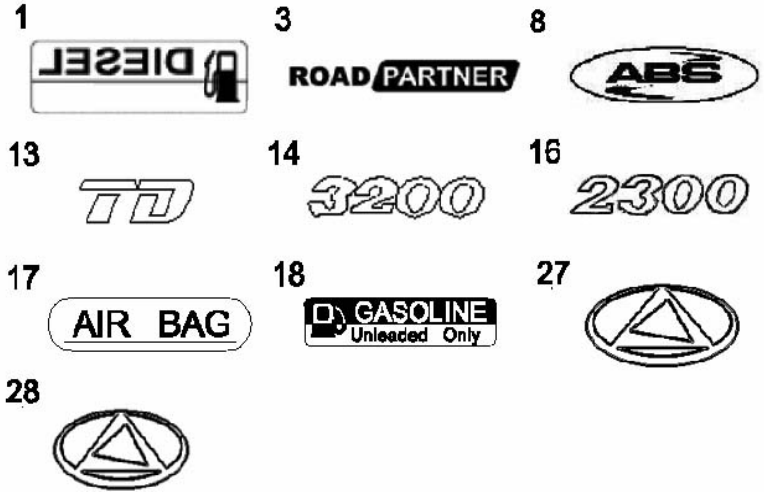

KEY NO.		PART NAME										
			ENGINE							APPLICATION		
ITC	PART NO.	T/M	G23D	G32D			OPTION	L/R	Q'TY	FROM	TO	REMARK
	[03] R101H-0004		EMBLEM-ROAD PARTNER S	S					1			
	[08] 79922 05001		STICKER-ABS S	S					1			
	[14] 79961 05020		EMBLEM-3200	S					1			
	[16] 79962 05010		EMBLEM-2300 S						1			
	[17] 79957 05000		STICKER-AIR BAG S	S					1			
	[18] 79955 05010		LABEL-GASOLINE UNLEADED S	S					1			
	[27] R101H-0001		BADGE-TAIL GATE S	S					1			
	[28] R211B-0001		BADGE-HOOD S	S					1			

8 ELECTRICAL EQUIPMENTS

8010 INSTRUMENT CLUSTER

8210 WIRING

8310 FRONT LAMP

8320 REAR LAMP

8410 FUSE & RELAY

8510 SWITCH

8610 ELECTRICAL PARTS

8810 AIR BAG SYSTEM

8910 AUDIO SYSTEM

8920 ANTENNA

8010

INSTRUMENT CLUSTER

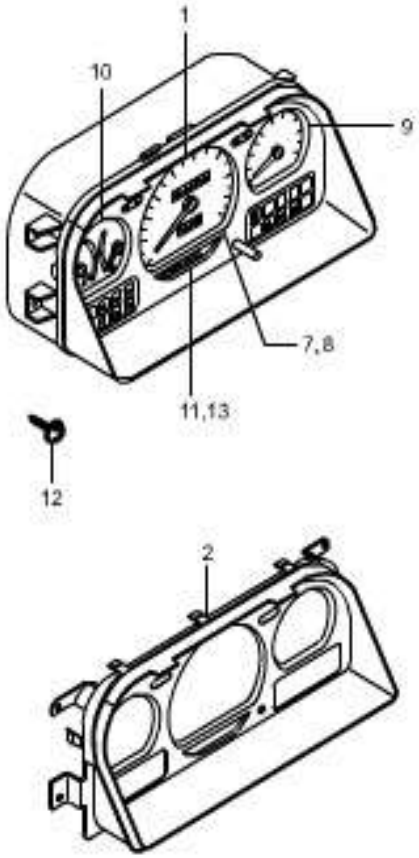

KEY NO.		PART NAME										
			ENGINE							APPLICATION		
ITC	PART NO.	T/M	G23D	G32D			OPTION	L/R	Q'TY	FROM	TO	REMARK
	[01]		METER A-COMBINATION									
	R112J-0003	M	S				&GG2&PM0.		1			
	R112J-0004	A	S				&GG2&PM1.		1			
	R112J-0006	A		S			&GG3&PM1.		1			
	[12]		T/SCREW-PAN SEMS									
	98414 5020B		S	S					4			M5×20

8210

WIRING

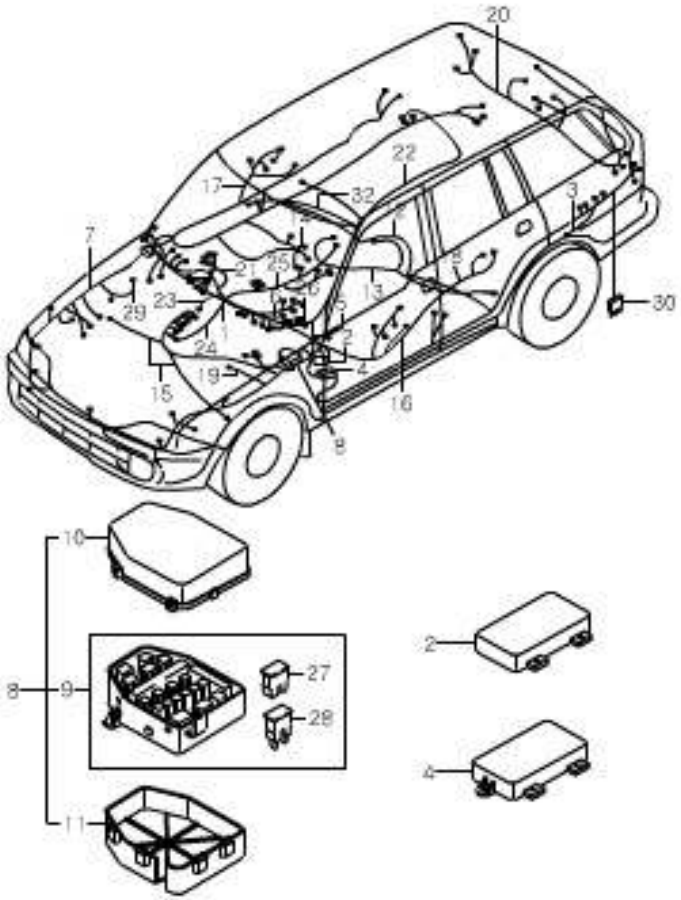

KEY NO.		PART NAME										
ITC	PART NO.	T/M	ENGINE G23D	ENGINE G32D	ENGINE	ENGINE	OPTION	L/R	Q'TY	APPLICATION FROM	APPLICATION TO	REMARK
	[01]		WIRING A-MAIN									
	R112H-1003	M	S						1			
	R112H-1024	A		S					1			
	[02]		BOX A-FUSE									
	82110 05001		S	S					1			
	[03]		WIRING A-F/SENDER EXTN									
	R112H-8014		S	S			&GG2/GG3.		1			
	[04]		BOX A-RELAY(CABIN)									
	82121 06000		S	S					1			
	[07]		WIRING A-ENG									
	R112H-3011		S	S					1			
	R112H-3031		S	S					1			
	[08]		BOX A-RELAY(ENG)									
	82320 05020		S	S					1			
	[12]		WIRING A-FLOOR									
	R112H-5001		S	S			&KAB.		1			
	[16]		WIRING A-FRT DR									
	R112H-7001		S	S				L	1			
	[17]		WIRING A-FRT DR									
	R112H-7002		S	S				R	1			

8210

WIRING

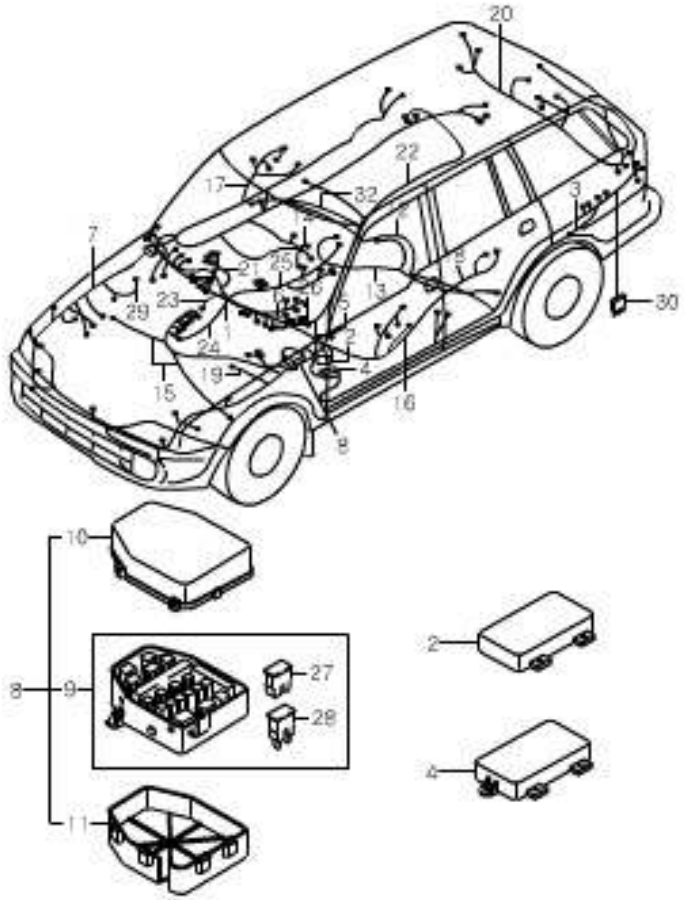

KEY NO.		PART NAME										
			ENGINE							APPLICATION		
ITC	PART NO.	T/M	G23D	G32D			OPTION	L/R	Q'TY	FROM	TO	REMARK
	[18]		WIRING A-RR DR									
	R112H-7003		S	S				L	1			
			WIRING A-RR DR									
	R112H-7004		S	S				R	1			
	[20]		WIRG A-T/GATE									
	R112H-8011		S	S			&BFR.		1			
	[21]		WIRING A-A/CON(S.A.T.C)									
	68710 05420		S	S			&HA3.	L	1			
	[22]		WIRING A-ROOF									
	R112H-6001		S	S			&LAD.		1			
	[25]		WIRING A-T/M									
	R112H-4051	M	S	S			&GG2&PM0.		1			
	R112H-4061	A	S	S			&GG2/GG3&PM1.		1			
	[26]		WIRING A-DIAGNOSIS EXTN									
	82911 05001		S	S					1			
	[ ]		WIRING A-ALT EXTN									
	82960 05101		S				&GG2.		1			
	82960 05301			S			&GG3.		1			
	[ ]		WIRING A-A/BAG EXTN									
	R112H-8020		S	S			&RAS.		1			

8210

WIRING

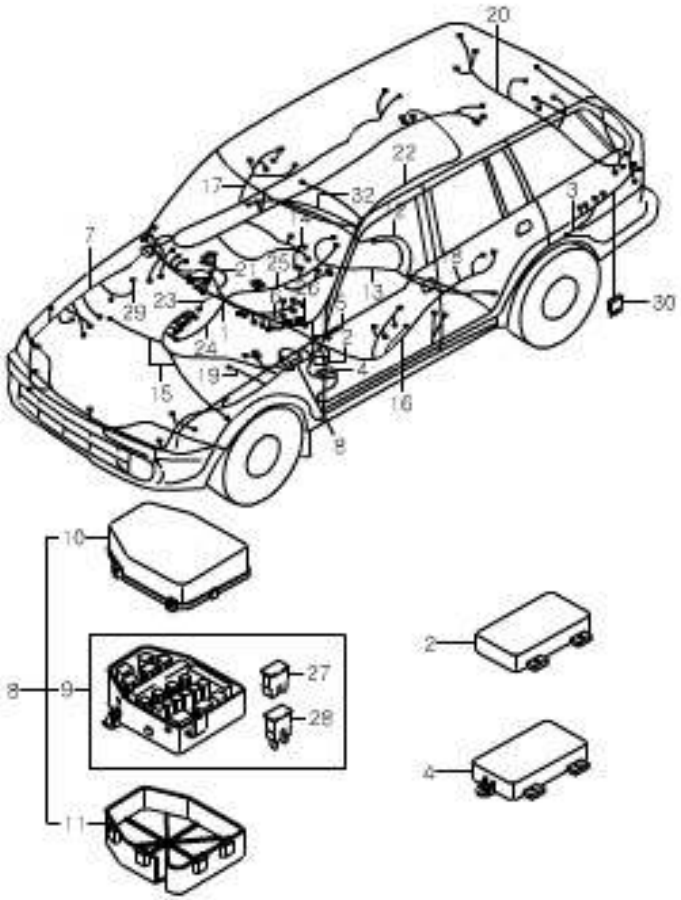

KEY NO.		PART NAME										
ITC	PART NO.	T/M	ENGINE G23D	ENGINE G32D	ENGINE	ENGINE	OPTION	L/R	Q'TY	APPLICATION FROM	APPLICATION TO	REMARK
	[ ] 82900 05000		WIR'G A-O2 SENSOR EXTN S	S			&GG2/GG3.		1			
	[32] 82190 05000			S			&ANR.		1			

8310

FRONT LAMP

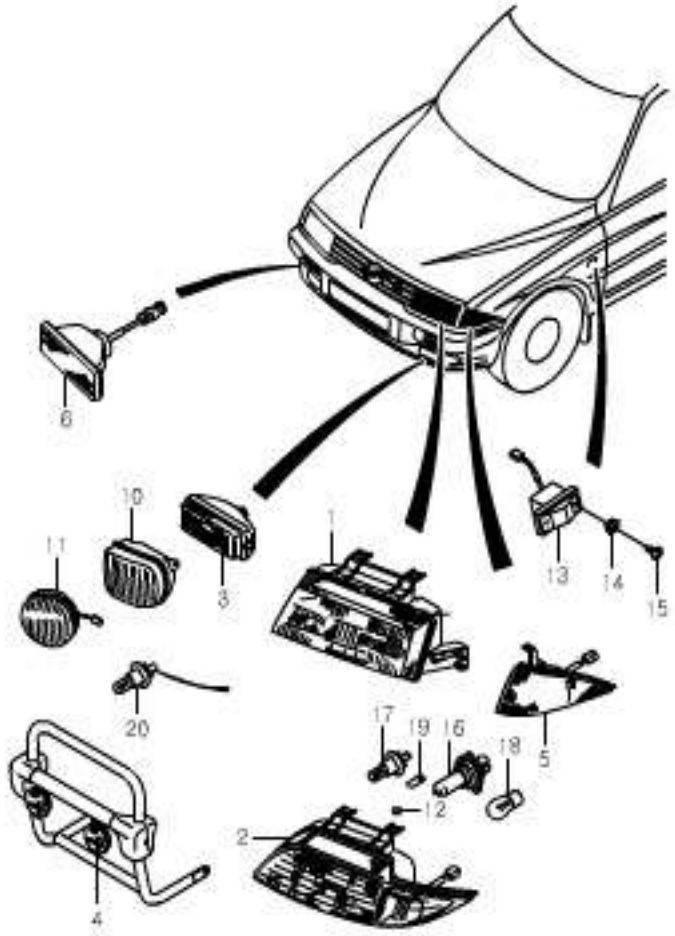

KEY NO.		PART NAME										
			ENGINE							APPLICATION		
ITC	PART NO.	T/M	G23D	G32D			OPTION	L/R	Q'TY	FROM	TO	REMARK
	[02]		LAMP A- HEAD									
	83101 05332		S	S				L	1			
	R112C-0100		S	S				L	1			
	83102 05332		S	S				R	1			
	R112C-0200		S	S				R	1			
	[03]		LAMP A-FOG,FRT									
	83201 05502		S	S			&BFF	L	1			
	83201 05502		S	S			&BFF	R	1			
	[12]		FADTENER-H/LAMP									
	99126 08100		S	S					2			8M
	[13]		LAMP A-S/REPEATER									
	83401 05301		S	S				L	1			
	83401 05301		S	S				R	1			
	[14]		GROMMET SCREW									
	94911 05000		S	S					4			M5
	[15]		T/SCREW-PAN									
	93705 50200		S	S					4			M5 X 20
	[16]		BULB									
	96610 60550		S	S					2			
	[17]		BULB									
	96660 H1550		S	S					2			

8310

FRONT LAMP

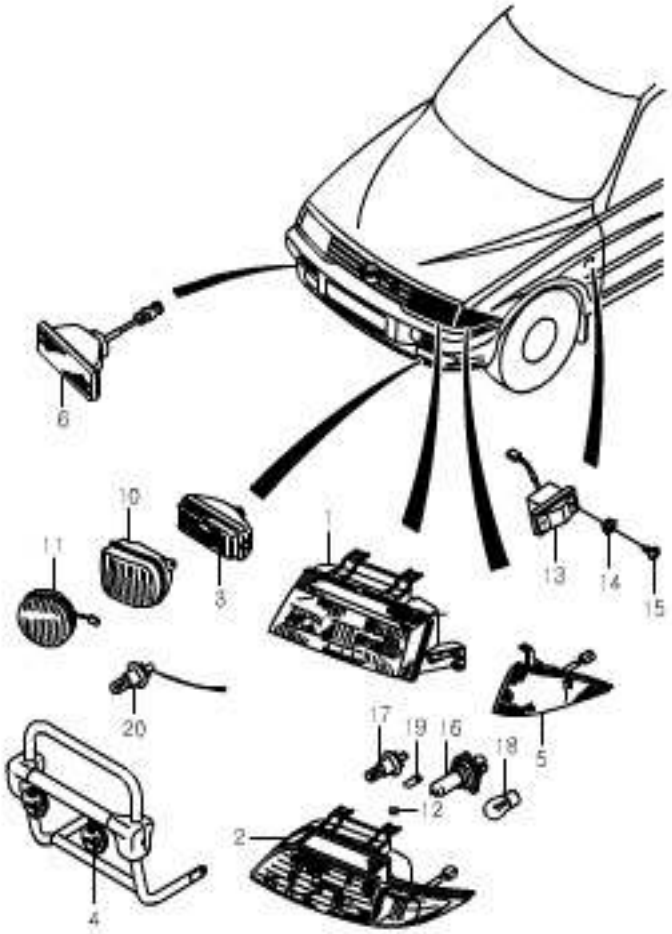

KEY NO.		PART NAME										
			ENGINE							APPLICATION		
ITC	PART NO.	T/M	G23D	G32D			OPTION	L/R	Q'TY	FROM	TO	REMARK
	[18] H8105-55001		BULB S	S					2			
	[19] 96660 00211		BULB S	S					2			

8320

REAR LAMP

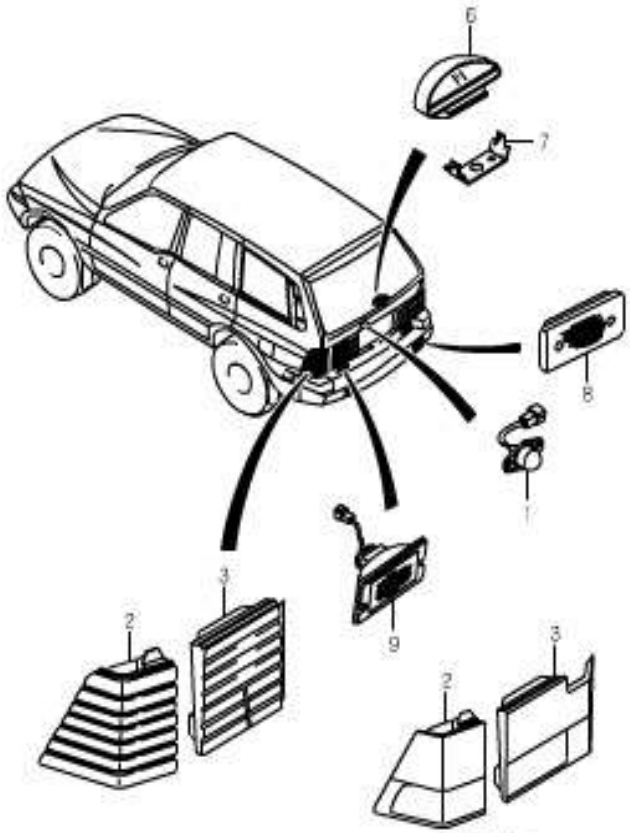

KEY NO.		PART NAME										
			ENGINE							APPLICATION		
ITC	PART NO.	T/M	G23D	G32D			OPTION	L/R	Q'TY	FROM	TO	REMARK
	[01]		LAMP A-LICENSE PLATE									
	83701 05101		S	S					1			
	[02]		LAMP A-RR COMBI QTR									
	83601 05752		S	S				L	1			
			LAMP A-RR COMBI									
	83601 07001		S					L	1			
	[03]		LAMP A-RR COMBI QTR									
	83602 05752		S	S				R	1			
			LAMP A-RR COMBI									
	83604 07001		S					R	1			
	[06]		LAMP A-HMS									
	83860 05001		S	S					1			
	[07]		BRKT A-HMS LAMP									
	83870 05000		S	S					1			
	[08]		LAMP A-R/REF									
	83901 05100		S	S				L	1			
	83902 05100		S	S				R	1			
	[09]		LAMP A-RR FOG									
	83850 05002		S	S				L	1			
	83850 05102		S	S				R	1			

8410

FUSE & RELAY

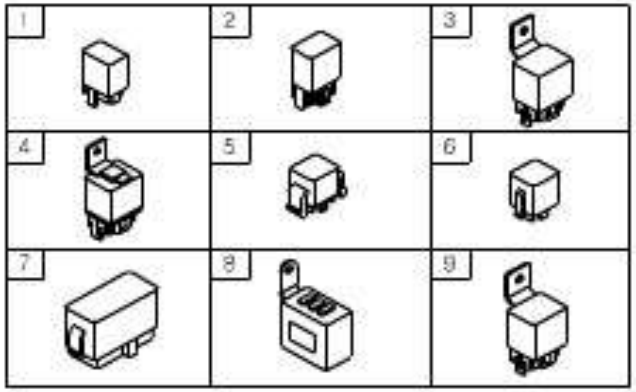

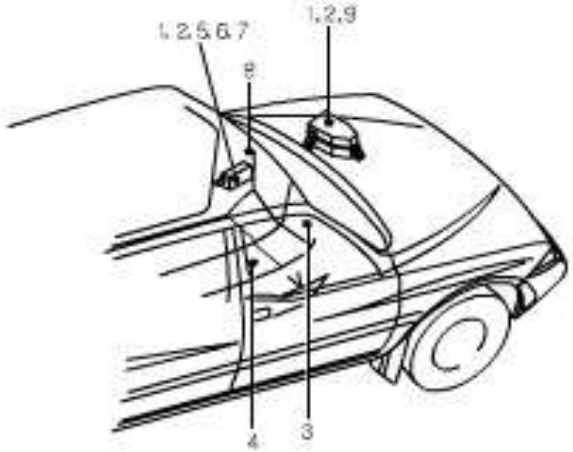

KEY NO.		PART NAME										
			ENGINE							APPLICATION		
ITC	PART NO.	T/M	G23D	G32D			OPTION	L/R	Q'TY	FROM	TO	REMARK
	[01]		RELAY A-POWER(3P)									
	84130 05000		S	S					2			FOR ENG
			RELAY A-POWER(1T)									
	84410 06100		S	S			&GG2/GG3.		1			FOR MAIN
	[02]		RELAY A-MINI 4P,N/O									
	84150 01300		S	S			&BFF.		1			FOR ENG
	84150 01300		S	S					4			FOR ENG
	84150 01300	M	S	S			&PM0.		2			FOR MAIN
	84150 01300	A	S	S			&PM1.		4			FOR MAIN
	[03]		RELAY A-POWER(5P,W/COVER)									
	84170 05102		S	S			&GG2/GG3.		2			FOR ENG
	[04]		RELAY A-PWR(4P,N/C,WO/BRKT									
	84190 05100		S	S					1			
	[05]		RELAY A-POWER(5P,W/BRKT)									
	84190 01301		S	S			&ANR.		1			ONLY R100
	[06]		FLASHER UNIT									
	84410 05100		S	S					1			FOR MAIN
	[08]		RELAY A-POWER,5P									
	84210 05001		S	S					1			FOR MAIN
	84210 05001		S	S			&ANR.		1			FRO MAIN,ONLY R100

8510

SWITCH

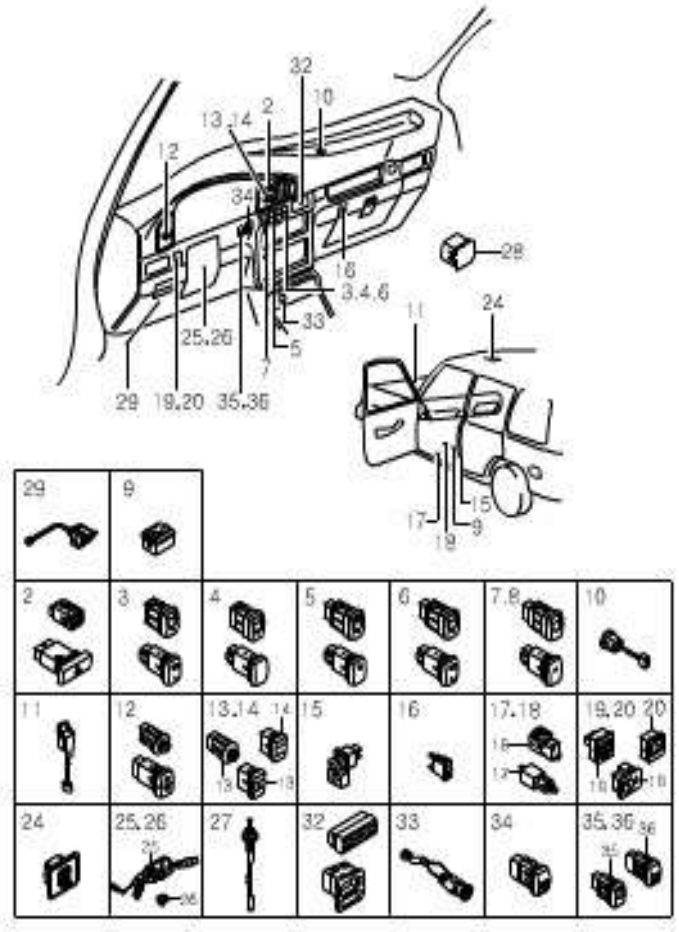

KEY NO.		PART NAME										
			ENGINE							APPLICATION		
I T C	PART NO.	T / M	G 2 3 D	G 3 2 D			OPTION	L / R	Q ' T Y	FROM	TO	REMARK
	[02] 85210 05701		SWITCH A-HAZARD S	S					1			
	[03] 85250 05701		SWITCH A-RR FOG LAMP S	S		S			1			
	[05] 85260 05711		SWITCH A-DEF & MIRROR HTD S	S					1			
	[06] 85270 05701		SWITCH A-FRT FOG LAMP S	S					1			
	[09] 85890 05702		SWITCH A-SEAT HEATER S	S					1			
	[10] 85340 05000		SENSOR A-SUN S	S			&HA3.		1			
	[11] 85350 06000		SENSOR A-AMBIENT S	S			&HA3.		1			
	[12] 85510 05701		SWITCH A-RR WASHER & WIPER S	S					1			
	[13] 85520 05701		SWITCH A-4WD P/TIME S	S					1			

8510

SWITCH

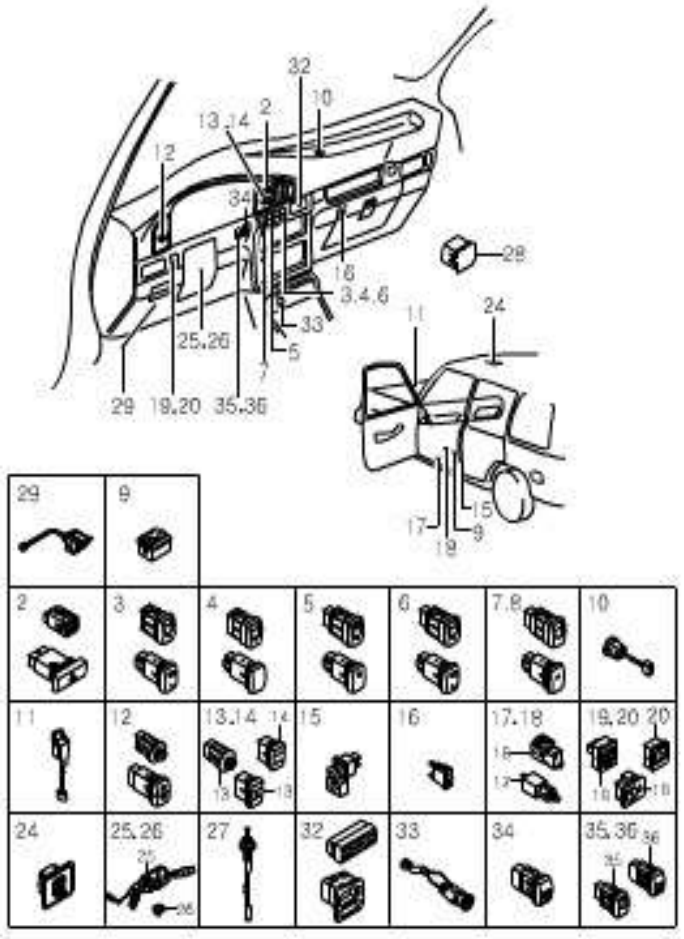

KEY NO.		PART NAME										
			ENGINE							APPLICATION		
I T C	PART NO.	T / M	G 2 3 D	G 3 2 D			OPTION	L / R	Q ' T Y	FROM	TO	REMARK
	[14]		B/COVER-CTR FACIA S/W									
	85241 05700		S	S					1			
	[15]		SWITCH A-DR(2P)									
	85730 05111		S	S					1			
	[16]		SWITCH A-GLOVE BOX									
	85740 05000		S	S					1			
	[17]		SWITCH A-CLUTCH				&PM0.					
	85760 06001		S	S					1			
	[18]		SWITCH A-KICK DOWN (4P)									
	85780 05020		S	S			&PM1.		1			
	[19]		S/W A-O/S MIRROR W/LEVEL'G									
	85810 05711		S	S					1			
	[25]		SWITCH A-M/FUNCTION									
	R201T-1200		S	S			&RAS.		1			
	85901 05192		S	S			-RAS.		1			
	[28]		COVER-A/CRUISE CONT SW BLANKG									
	85921 06000		S	S					1			
	[32]		CLOCK A-DIGITAL									
	81110 05700		S	S					1			

8510

SWITCH

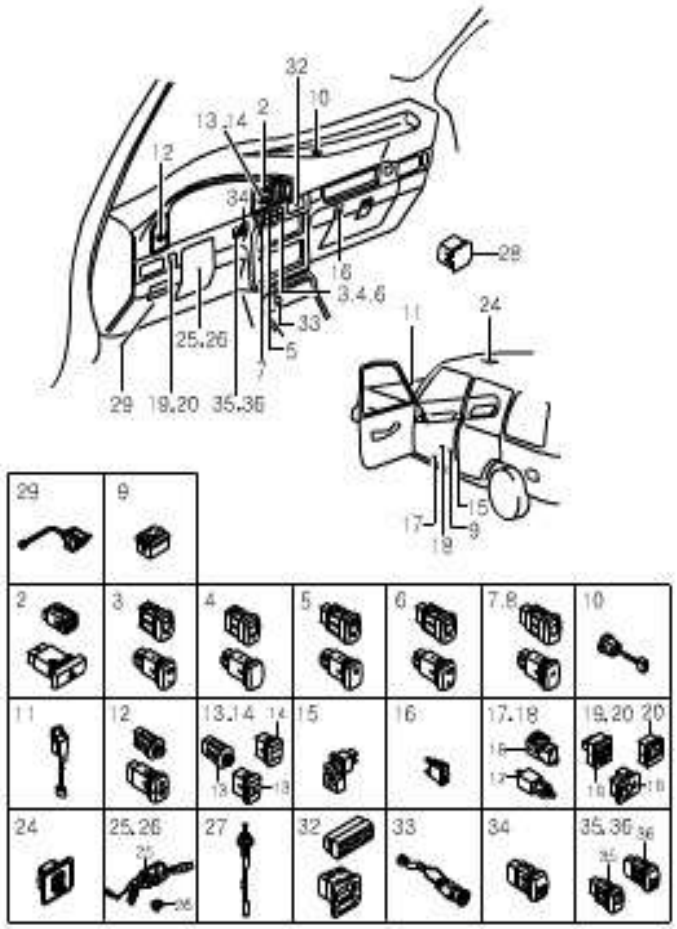

KEY NO.		PART NAME										
			ENGINE							APPLICATION		
I T C	PART NO.	T / M	G 2 3 D	G 3 2 D			OPTION	L / R	Q ' T Y	FROM	TO	REMARK
	[33] R112M-0001		LIGHTER A-CIGAR S S						1			

8610

ELECTRICAL PARTS

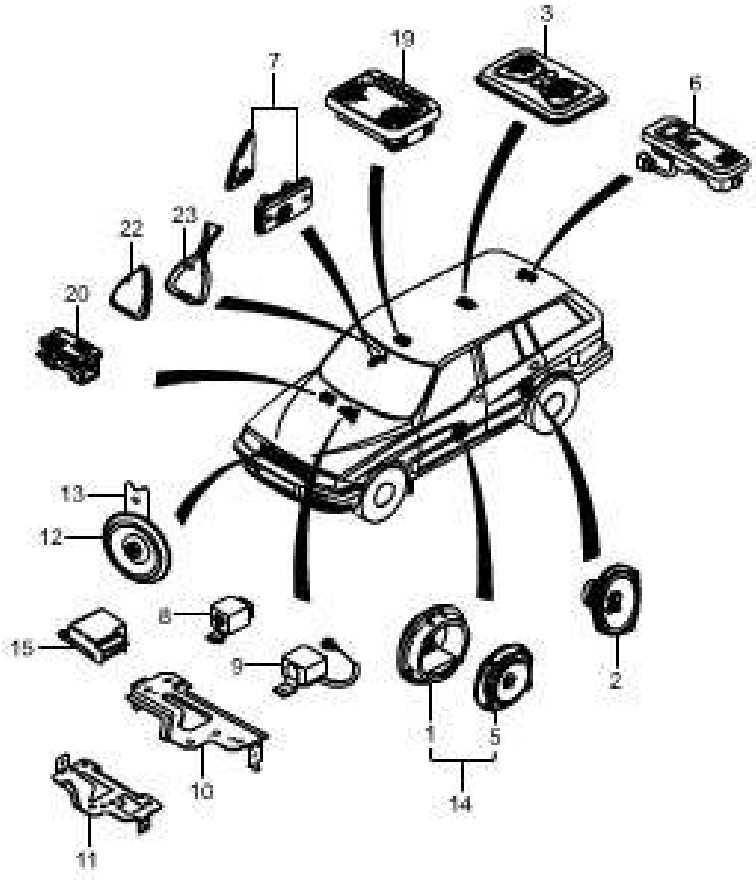

KEY NO.		PART NAME											
			ENGINE							APPLICATION		
ITC	PART NO.	T/M	G23D	G32D			OPTION	L/R	Q'TY	FROM	TO	REMARK
	[01]		SPEAKER-PROTECTOR FRT									
	89312 05000		S	S					2			
	[02]		SPEAKER A-RR (3WAYS)									
	89320 06100		S	S					2			
	[03]		LAMP A-CTR ROOM									
	83720 05801		S	S					1			
	[05]		SPEAKER A-FRT									
	89311 05000		S	S					2			
	[06]		LAMP A-LUGGAGE									
	83730 05801		S	S					1			
	[07]		LAMP A-DOOR STEP									
	83740 05102		S	S				L	1			
	83745 05102		S	S				R	1			
	[12]		HORN A-HIGH									
	86510 05002		S	S			&AHD.		1			
			HORN A-LOW									
	86550 05002		S	S			&AHD.		1			
	[13]		BRKT-HORN									
	86511 05101		S	S			&AHD.		1			

8610

ELECTRICAL PARTS

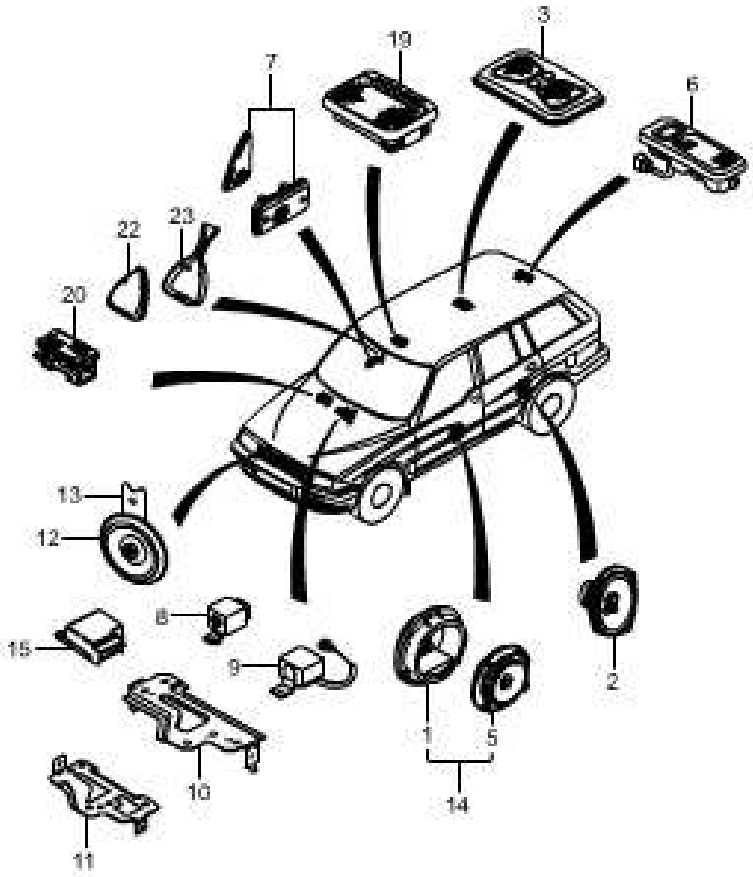

KEY NO.		PART NAME											
			ENGINE							APPLICATION		
ITC	PART NO.	T/M	G23D	G32D			OPTION	L/R	Q'TY	FROM	TO	REMARK
	[14] 89310 05001		SPEAKER & PROTECTOR A-FRT S	S					2			
	[19] 83710 05801		LAMP A-FRT ROOM S	S					1			
	[20] 83750 05001		LAMP A-GLOVE BOX S	S					1			
	[23] 87930 08700		COVER A-STYLING S	S			&ANR.		1			ONLY R100

8810

AIR BAG SYSTEM

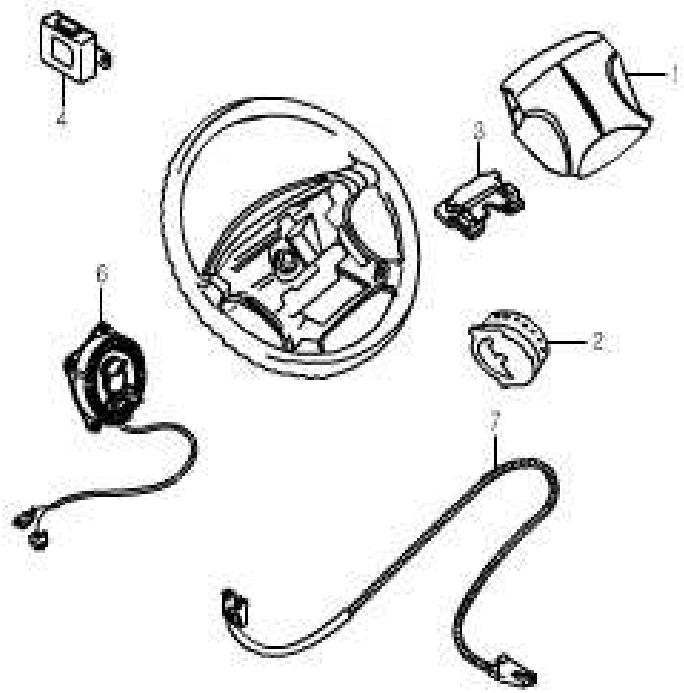

KEY NO.		PART NAME										
			ENGINE							APPLICATION		
ITC	PART NO.	T/M	G23D	G32D			OPTION	L/R	Q'TY	FROM	TO	REMARK
	[01] R101T-1020		AIR BAG A-DRIVE S	S			&RAS.		1			
	[04] R101T-1010		SDM A-SINGLE S	S			&RAS.		1			
	[06] 85920 05101		CONTACT COIL A-STEER'G S	S			&RAS.		1			

8910

AUDIO SYSTEM

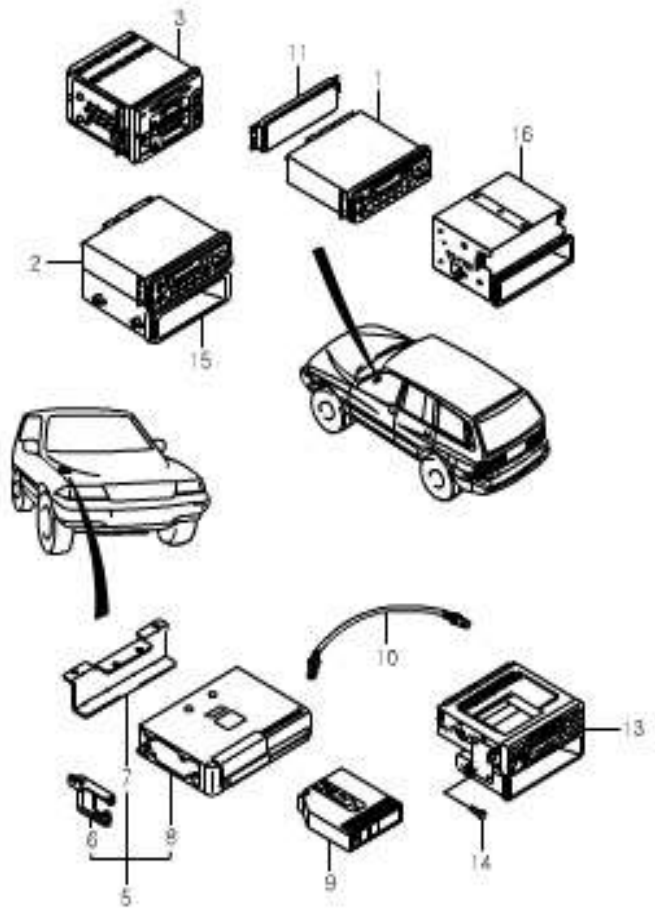

KEY NO.		PART NAME										
ITC	PART NO.	T/M	ENGINE G23D	ENGINE G32D	ENGINE	ENGINE	OPTION	L/R	Q'TY	APPLICATION FROM	APPLICATION TO	REMARK
	[11] 89105 06002		BLANKING COVER-AUDIO S	S					1			
	[14] 93804 50162		T/SCREW-TRUSS S	S					6			M5 X 16
	[16] 89108 05700		FRAME A-AUDIO & BOX S	S					1			

8920

ANTENNA

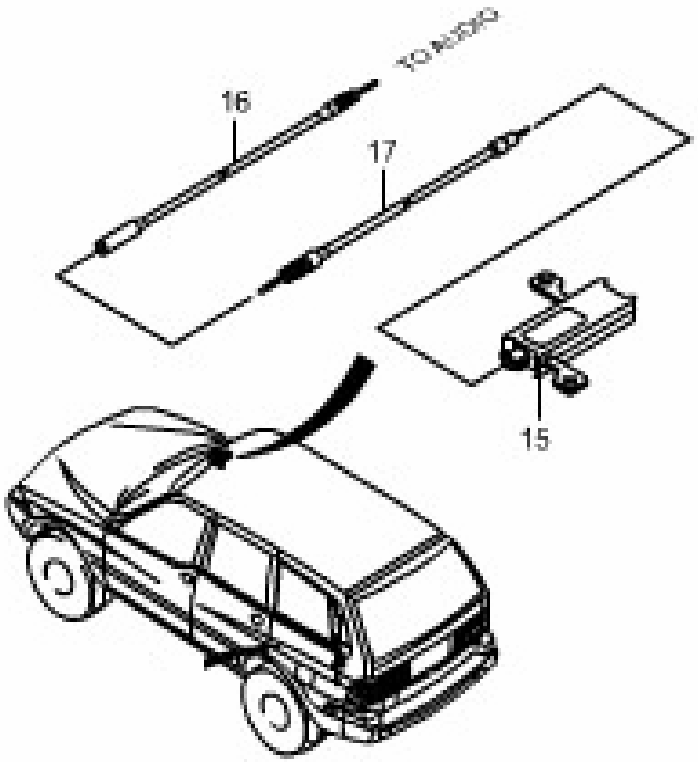

KEY NO.		PART NAME											
ITC	PART NO.	T/M	ENGINE G23D	ENGINE G32D	ENGINE	ENGINE	OPTION	L/R	Q'TY	APPLICATION FROM	APPLICATION TO	REMARK
	[15] 89420 07002		MODULE A-AM/FM ANTENNA S	S					1			
	[ ] 93654 60161		SCREW-HEX S	S					2			M6×1.0

9 O.V.M. & ACCESSORY

9110 JACK A & OVM TOOL

9210 OIL & ANTI FREEZE

9110

JACK A & OVM TOOL

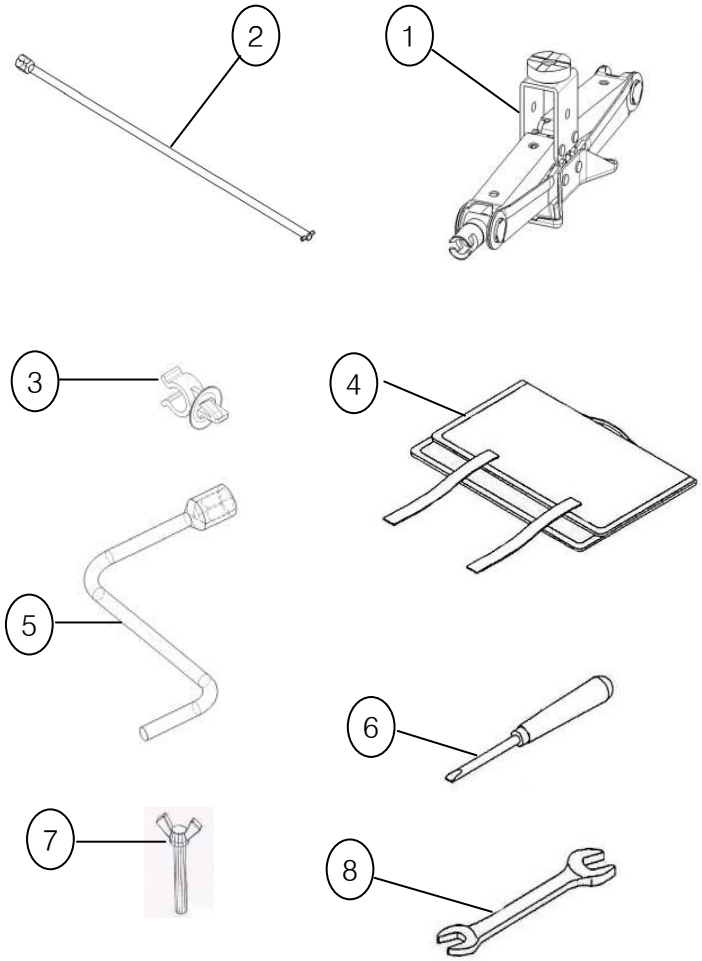

KEY NO.		PART NAME										
			ENGINE							APPLICATION		
ITC	PART NO.	T/M	G23D	G32D			OPTION	L/R	Q'TY	FROM	TO	REMARK
	[01]		JACK A-PANTOGRAPH									
	09110 32001		S	S					1			
	[02]		HANDLE A-S/TIRE MTG									
	40830 32000		S	S					1			
	[03]		HOLDER-S/TIRE HANDLE									
	40821 05000		S	S					2			
	[04]		BAG A-O.V.M TOOL									
	09180 05001		S	S					1			
	[05]		WRENCH-WHEEL NUT									
	09121 01002		S	S					1			
	[06]		DRIVER-PLUS & MINUS									
	09141 01000		S	S					1			
	[07]		KNOB-BOLT									
	77288 08B20		S	S					1			
	[08]		SPANNER									
	09151 11000		S	S					1			10×12
	09152 11000		S	S					1			14×17

9110

JACK A & OVM TOOL

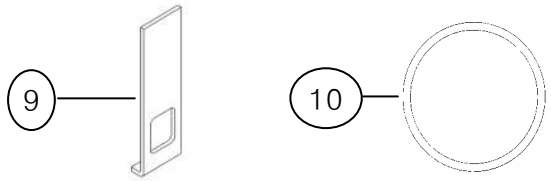

KEY NO.		PART NAME										
			ENGINE							APPLICATION		
ITC	PART NO.	T/M	G23D	G32D			OPTION	L/R	Q'TY	FROM	TO	REMARK
	[09] R210E-0001		INSULATOR-JACK MTG,SIDE S	S					1			
	[10] 09191 05000		RING-JACK & BAG MTG S	S					1			

9210

OIL & ANTI FREEZE

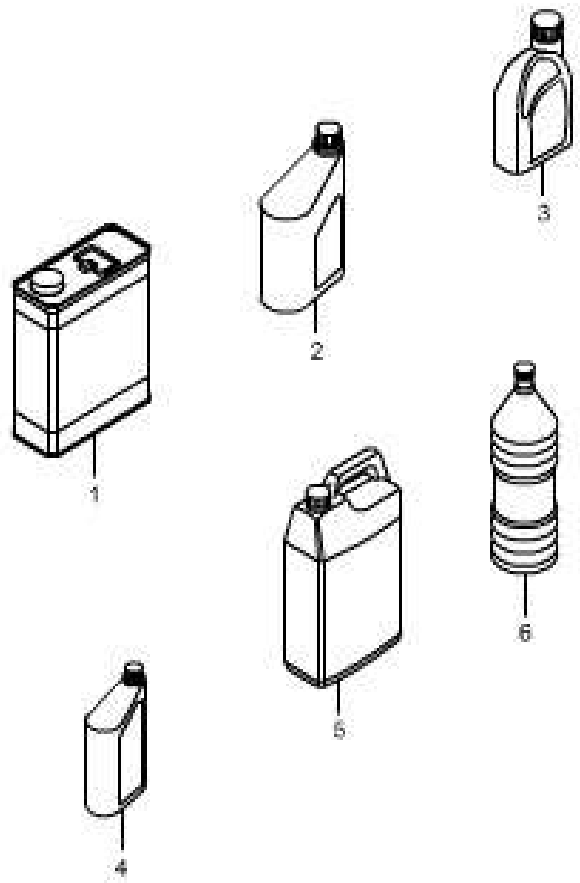

KEY NO.		PART NAME										
			ENGINE							APPLICATION		
I T C	PART NO.	T / M	G 2 3 D	G 3 2 D			OPTION	L / R	Q ' T Y	FROM	TO	REMARK