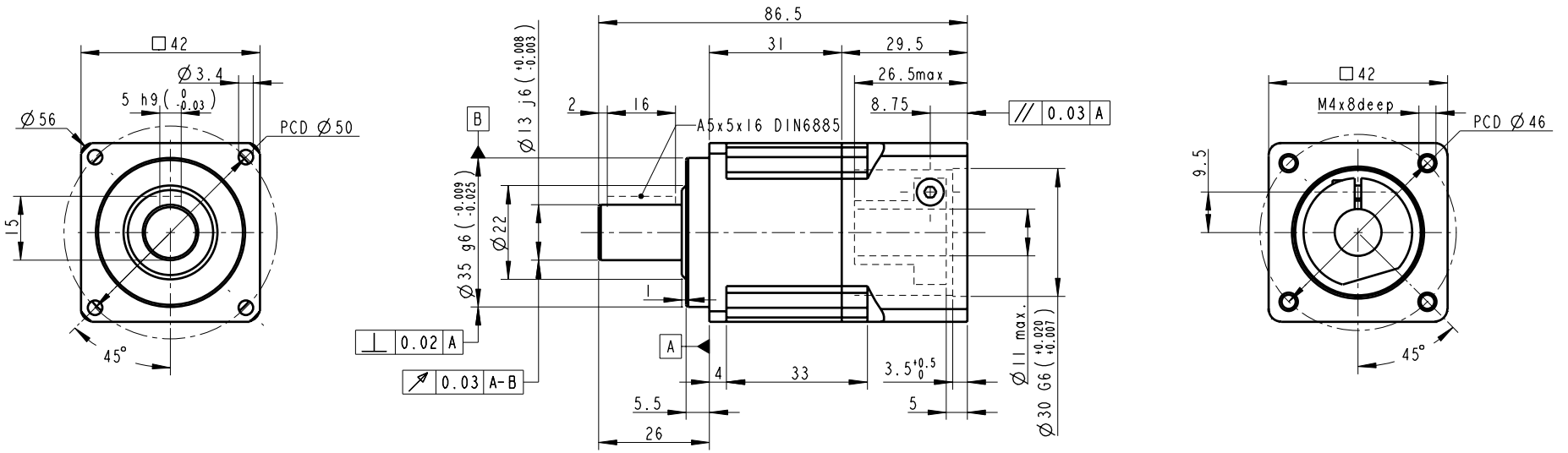

NOMINAL OUTPUT TORQUE: 14~22Nm
MAXIMUN OUTPUT TORQUE: 42~66Nm
NOMINAL INPUT SPEED: 5000RPM
MAXIMUN INPUT SPEED: 10000RPM
INERTIA: 0.03~0.05kg-cm^2
MASS: 0.5kg

SHAFT OPTION S1: SMOOTH OUTPUT SHAFT(STANDARD)
SHAFT OPTION S2: OUTPUT SHAFT WITH KEYWAY
REDUCED BACKLASH: 3arcmin
STANDARD BACKLASH: 5arcmin

BUSHING SUPPLIED WHEN MOTOR SHAFT DIAMETER SMALL THAN Ø11

PART NO. AB0421-P4010102 AB042-1, AD-W42-M42-2		APEX DYNAMICS, INC.
APPROVALS	DATE	TITLE AB042 1 STAGE, RATIO= 3~10 AND STANDARD FLANGE MOUNTING
DRAWN		DWG NO. AB0421-P4010102
CHECKED		
APPROVED Shih yi-pei	04-Oct-02	SIZE A3 / SCALE 1:1 / REV 2.0