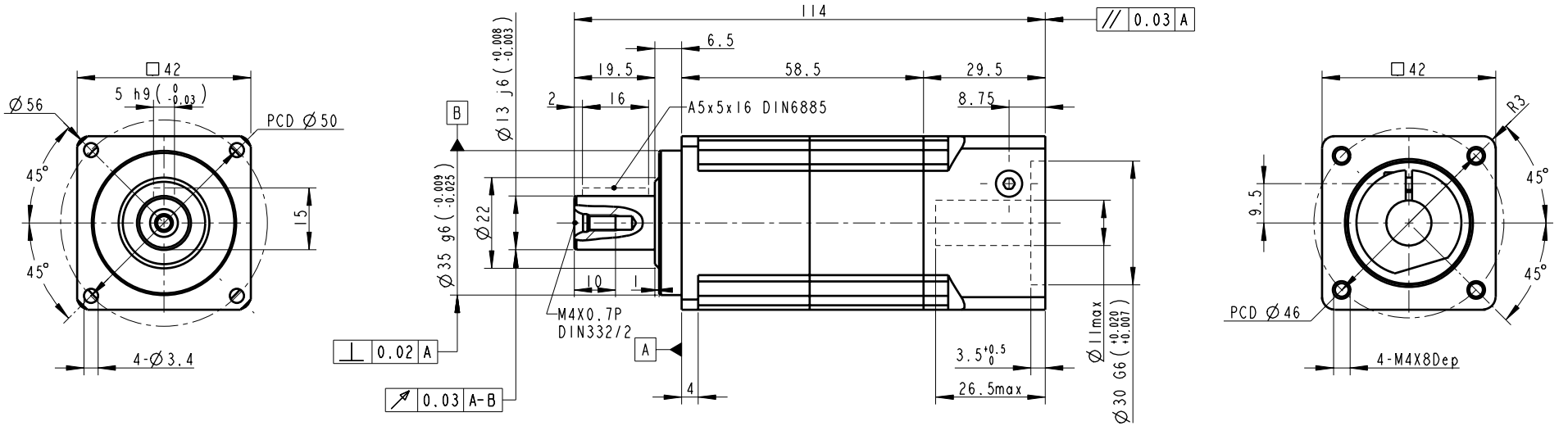

NOMINAL OUTPUT TORQUE: 14~22Nm
MAXIMUN OUTPUT TORQUE: 42~66Nm
NOMINAL INPUT SPEED: 5000RPM
MAXIMUN INPUT SPEED: 10000RPM
INERTIA: 0.03~0.04kg-cm^2
MASS: 0.8kg

SHAFT OPTION S1: SMOOTH OUTPUT SHAFT(STANDARD)
SHAFT OPTION S2: OUTPUT SHAFT WITH KEYWAY
REDUCED BACKLASH<= 6arcmin
STANDARD BACKLASH<= 8arcmin

BUSHING SUPPLIED WHEN MOTOR SHAFT DIAMETER SMALL THAN Ø11

PART NO. AF0422-P4010102 AF042-2, AD-W42-M42-2		APEX DYNAMICS, INC.
APPROVALS	DATE	TITLE AF042 2 STAGES, RATIO= 15~100 AND STANDARD FLANGE MOUNTING
DRAWN Vicky		DWG NO. AF0422-P4010102
CHECKED		
APPROVED Shih yi-pei	1-May-03	SIZE A3 / SCALE 1:1 / REV 3.0