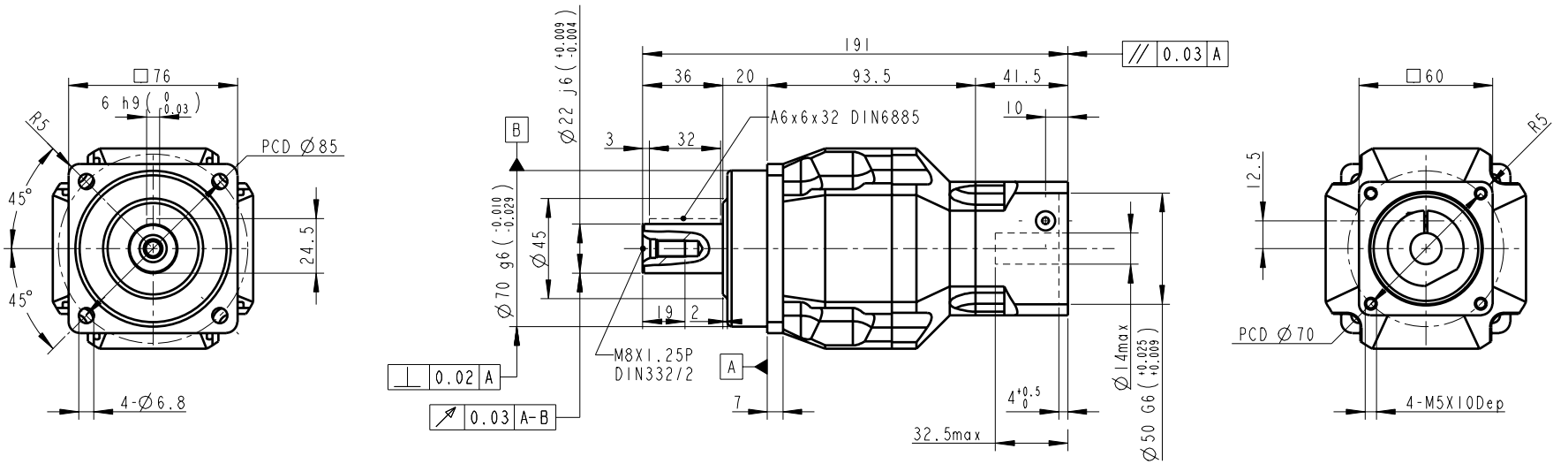

NOMINAL OUTPUT TORQUE: 100~160Nm
MAXIMUN OUTPUT TORQUE: 300~480Nm
NOMINAL INPUT SPEED: 4000RPM
MAXIMUN INPUT SPEED: 8000RPM
INERTIA: 0.13~0.18kg-cm^2
MASS: 4.1kg

SHAFT OPTION S1: SMOOTH OUTPUT SHAFT(STANDARD)
SHAFT OPTION S2: OUTPUT SHAFT WITH KEYWAY
REDUCED BACKLASH<= 6arcmin
STANDARD BACKLASH<= 8arcmin

BUSHING SUPPLIED WHEN MOTOR SHAFT DIAMETER SMALL THAN Ø14

PART NO. AF0752-P4020102 AF075-2, AD-W60-M60-2		APEX DYNAMICS, INC.	
APPROVALS	DATE	TITLE AF075 2 STAGES, RATIO= 15~100 AND STANDARD FLANGE MOUNTING	
DRAWN Vicky	1-May-03	DWG NO. AF0752-P4020102	
CHECKED			
APPROVED Shih yi-pei	1-May-03	SIZE A1	SCALE 1:1 / REV 3.0